INSTALLATION INSTRUCTIONS

READ AND SAVE THESE INSTRUCTIONS

WARNING! SHUT POWER OFF AT FUSE OR CIRCUIT BREAKER.

AVERTISSEMENT! COUPER LE COURANT AU NIVEAU DES FUSIBLES OU DU DISJONCTEUR.

PREPARING FOR INSTALLATION (Fig. 1&Fig. 3)

1. Shut off power at the fuse box or circuit breaker box and remove the old fixture including the mounting hardware.
2. Carefully unpack your new fixture and lay out all the parts in a clear area. Take care not to misplace any small parts necessary for installation.
3. Secure the tube with canopy assemble (I) onto the nipple (E) located on the top of the fixture body.
4. Attach the mounting plate (A) to the junction box with mounting screws (B) (Size: #8-32N*L0.5”). The side of the mounting plate with “GND” marked on it and two convex points must face out.

CONNECTING THE WIRES (Fig. 2)

5. At this point, connect the fixture wires to the outlet box wires as shown in Fig. 2, making sure that all wire connectors are secured. If your outlet has a ground wire (green or bare copper), connect the fixture’s ground wire to it. Otherwise, connect the fixture’s ground wire directly to the mounting plate (A) using the green screw provided. After wires connected, tuck them carefully into the outlet box.

COMPLETING THE INSTALLATION (Fig. 3)

6. Align canopy (D) onto mounting plate (A) and secure with screws (C).
7. Place the candle covers (G) over the sockets (H).
8. Install (4) four candelabra base bulbs (E) up to 60 watts each or CFL or LED equivalent (not included) in accordance with the fixture specification—**DO NOT EXCEED THE MAXIMUM WATTAGE RATING! (NE PAS DEPASSER LA PUISSANCE NOMINALE MAXIMALE!).**

Your installation is now complete. Return power to the outlet box and test the fixture.

Note: Illustration (Fig. 3) on this manual is for installation purposes only. It may or may not be identical to the fixture purchased.

Fig. 1

Set# A-021-130
- Mounting plate
- Ground screw
- Mounting screw*2

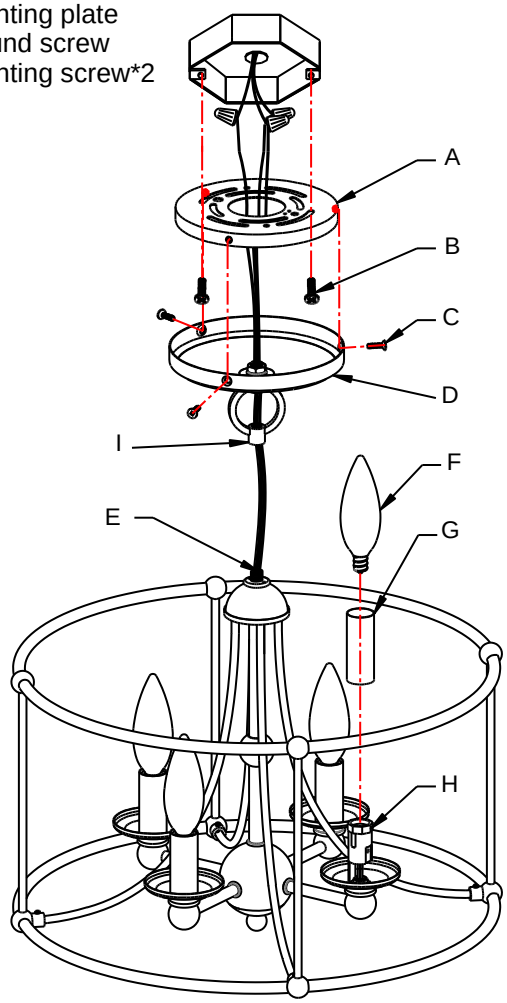

Fig. 2

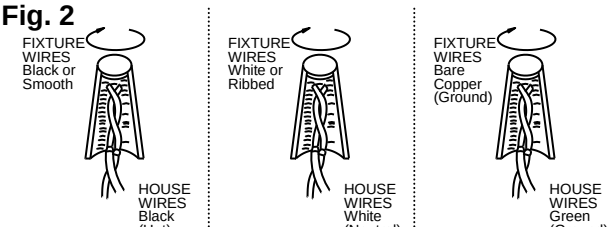

Intertek

american lighting association