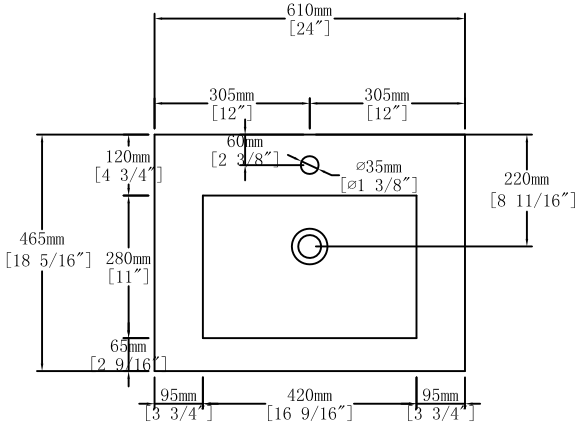

Top View

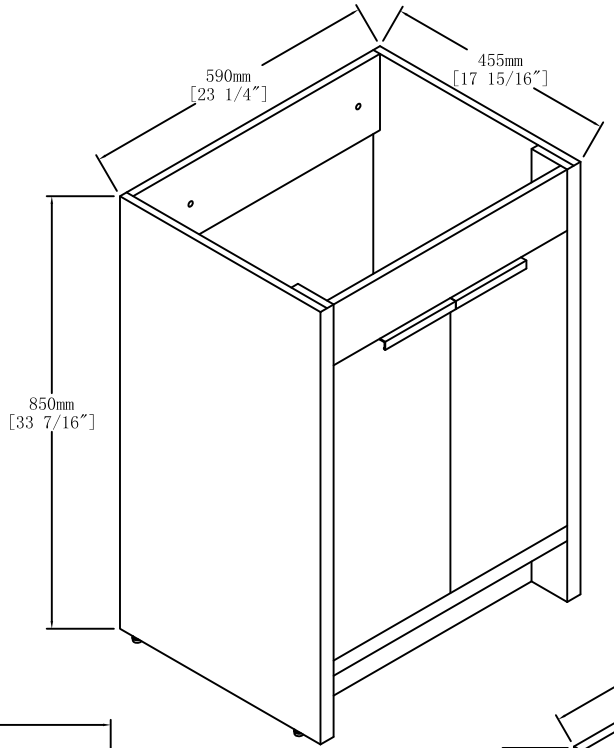

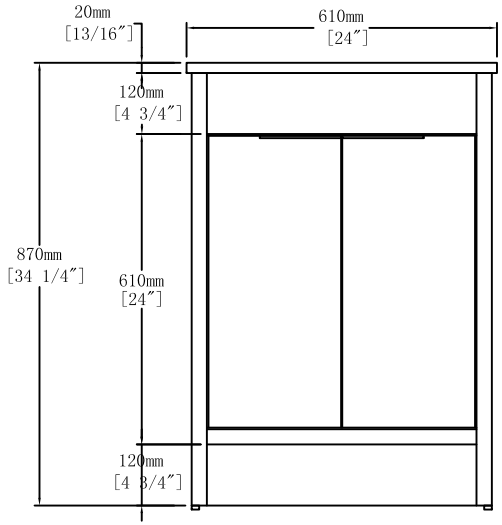

Front View

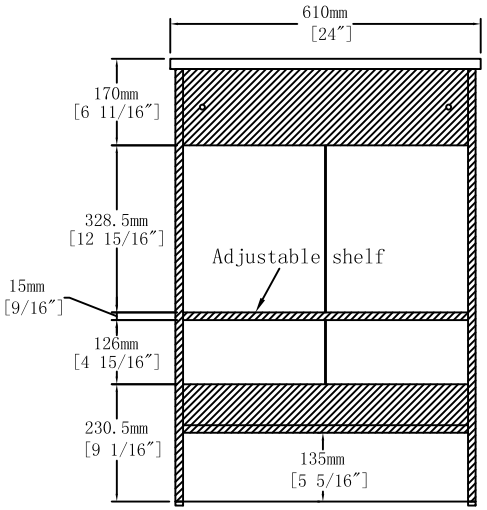
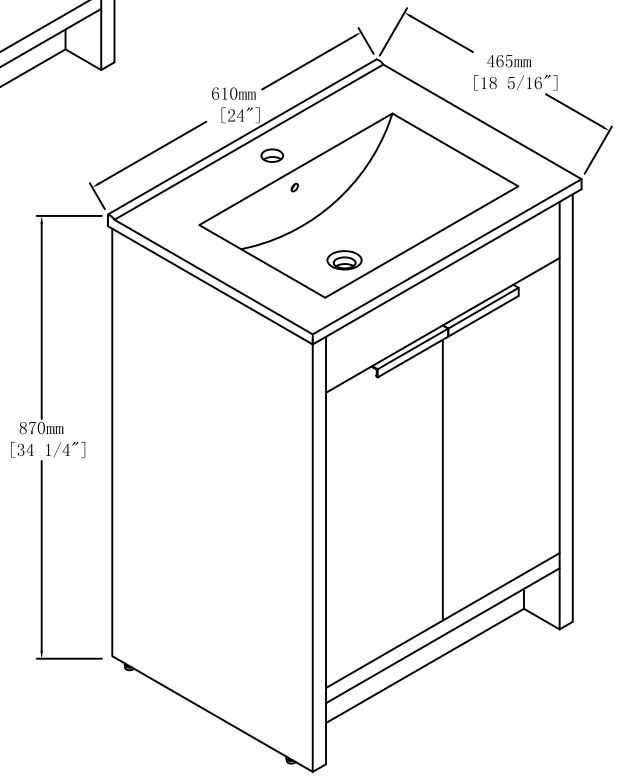
Back View