SKU:HK-CD-057-CL

User Manual

C7-20260413

Content

Disassembly Diagram 01

Accessories 02-04

Assembly Instructions
File Drawer on the Right 05-21

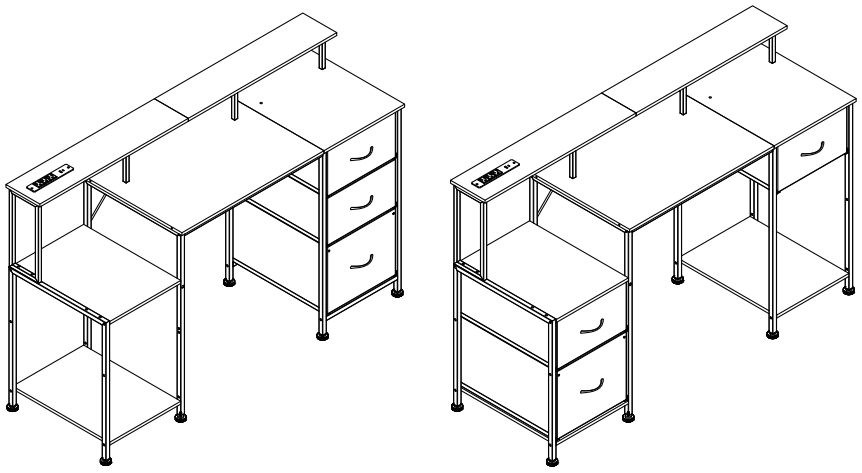

Assembly Instructions
File Drawer on the Left 22-38

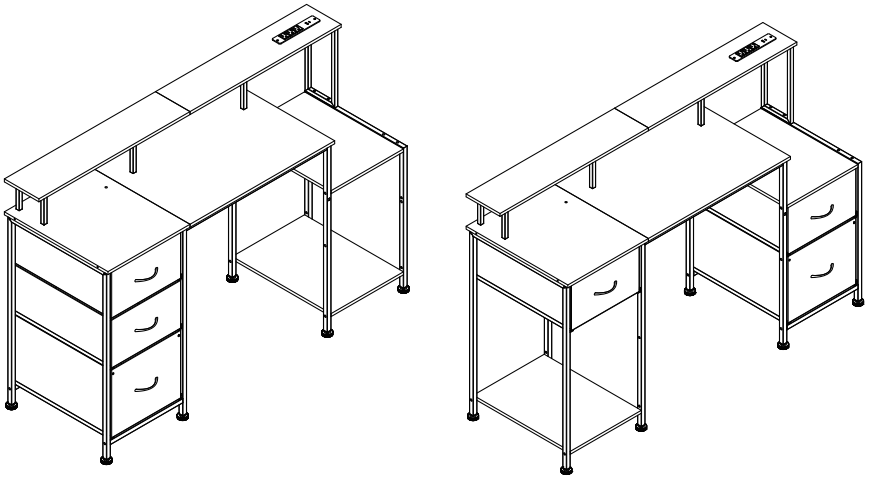

Problems You May Encounter 39

Disassembly Diagram

For easy installation
Scan the QR code to access the installation guide video.

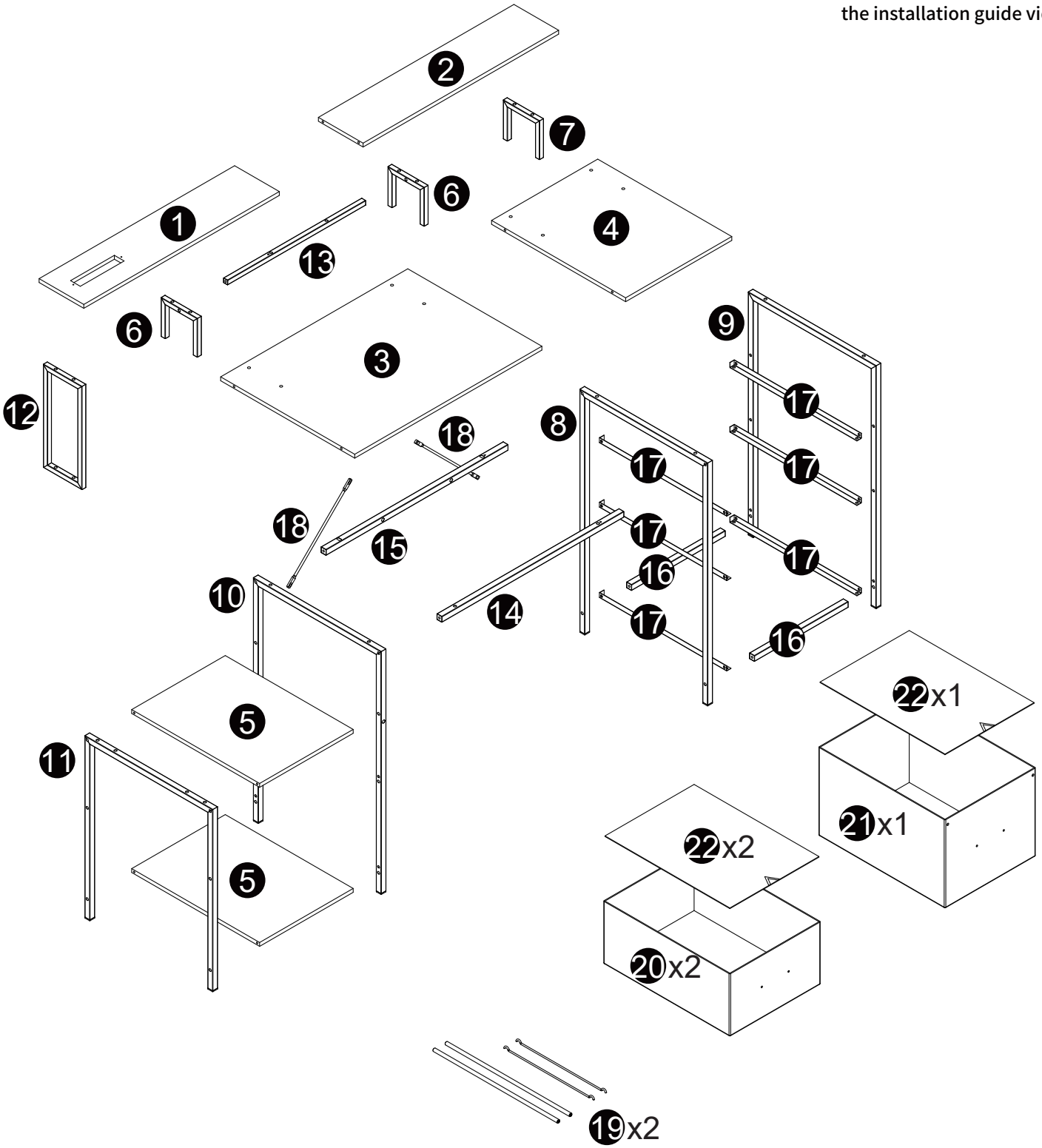

Accessories

① x1 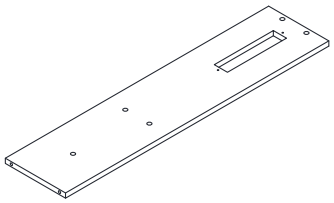	② x1 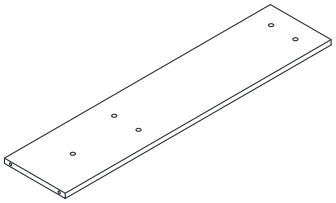	③ x1 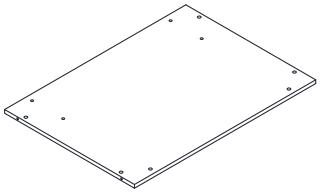	④ x1 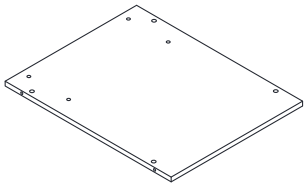
⑤ x2 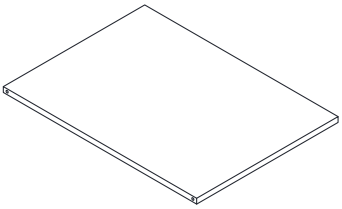	⑥ x2 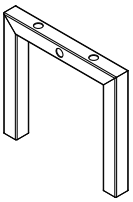	⑦ x1 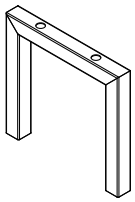	⑧ x1 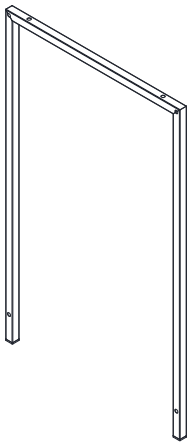
⑨ x1 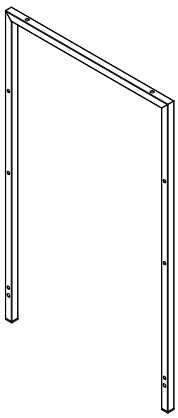	⑩ x1 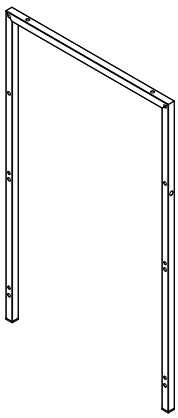	⑪ x1 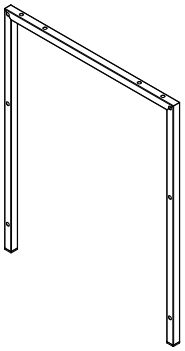	⑫ x1 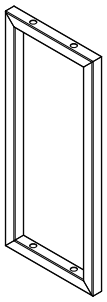
⑬ x1 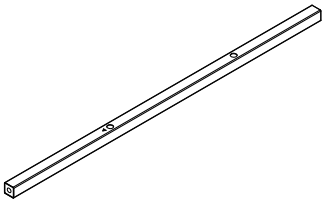	⑭ x1 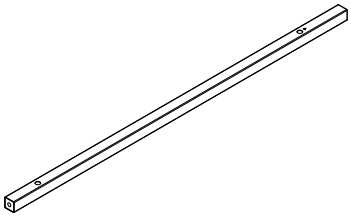	⑮ x1 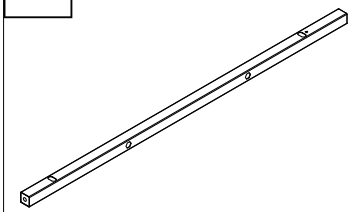	⑯ x2 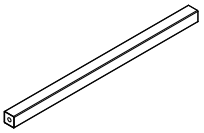

Accessories

⑰ x6 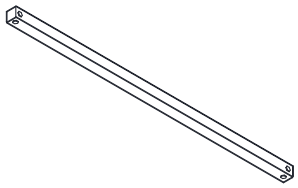	⑱ x2 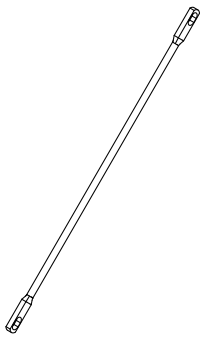	⑲ x1 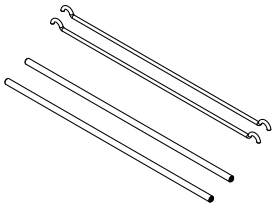	⑳ x2 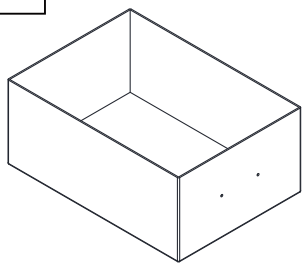
㉑ x1 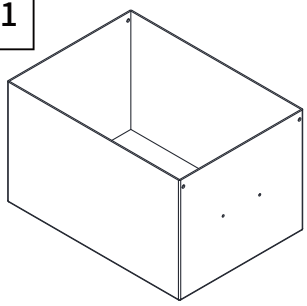	㉒ x3 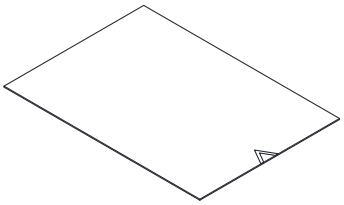		

Accessories

Ⓐ x8 +1 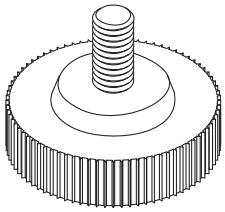 M6	Ⓑ x4 +1 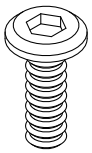 M5×15mm	Ⓒ x4 +1 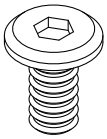 M6×10mm	Ⓔ x16 +2 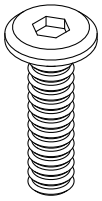 M6×23mm
Ⓕ x16 +2 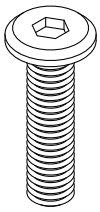 M6×25mm	Ⓗ x4 +1 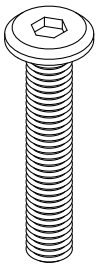 M6×35mm	Ⓙ x18 +2 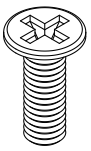 M4×10mm	Ⓚ x2 +1 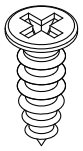 ST4×12mm
Ⓛ x4 +1 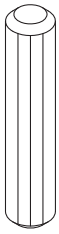 ø6×30mm	Ⓜ x8 +1 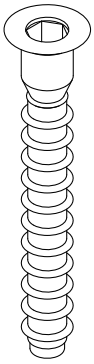 M6.3×40mm	Ⓝ x1 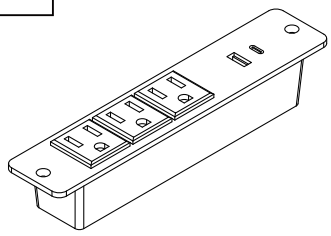	Ⓟ x3 +1 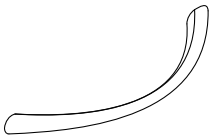
Ⓠ x1 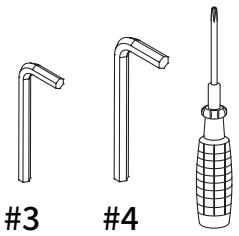 #3 #4	Ⓡ x1 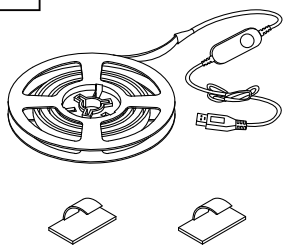	Ⓢ x8 +2 	

Assembly Instructions

Step1:

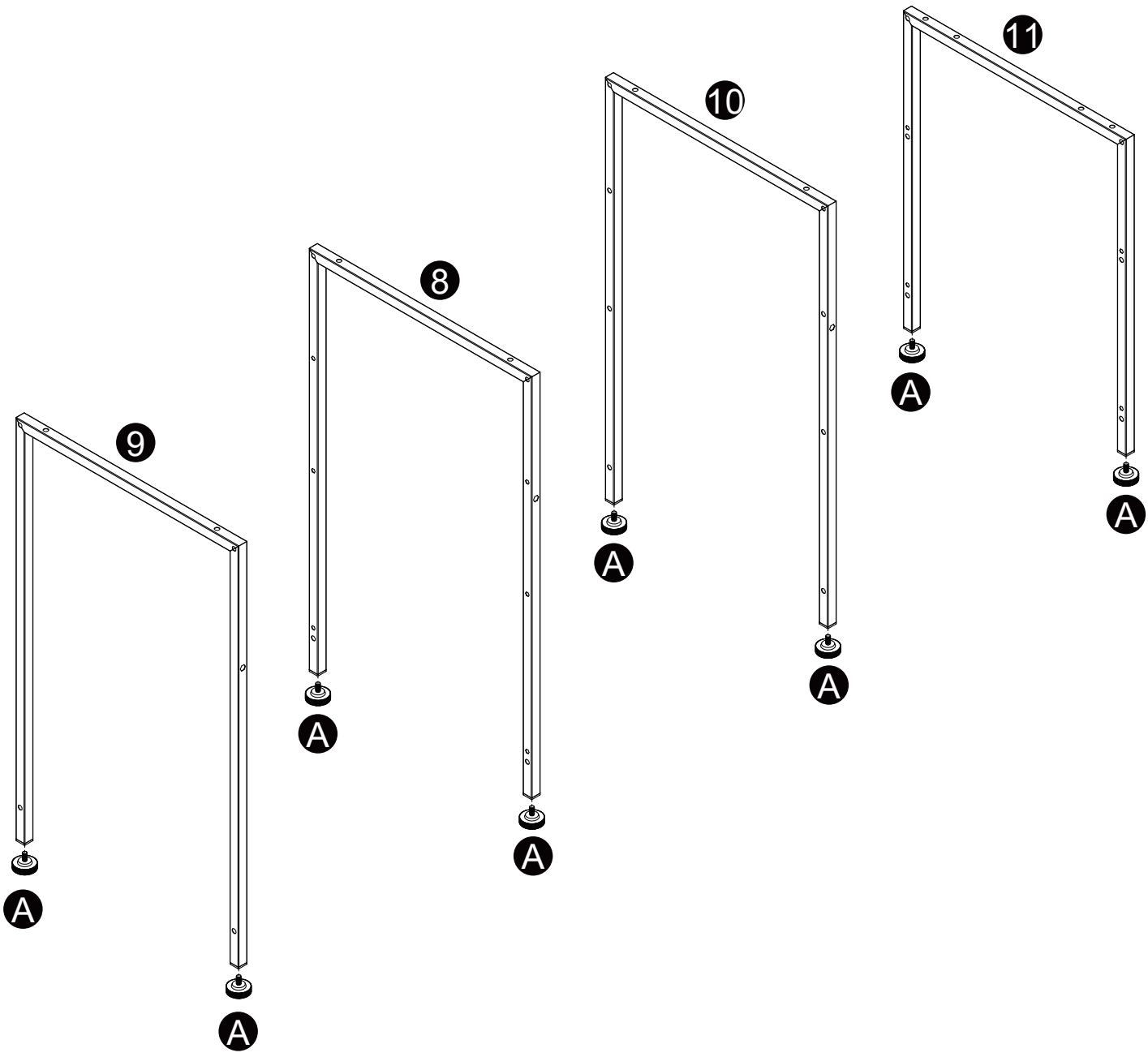

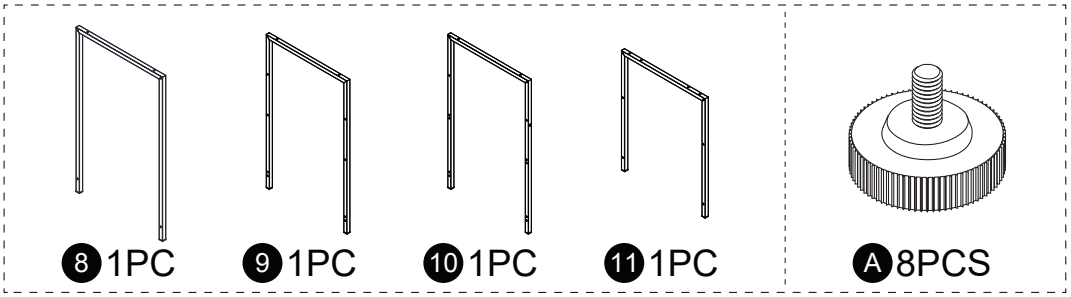

Assembly Instructions

We provide 2 installation methods for you to choose from.You can freely combine Boards and Drawers according to your needs.

P7-8

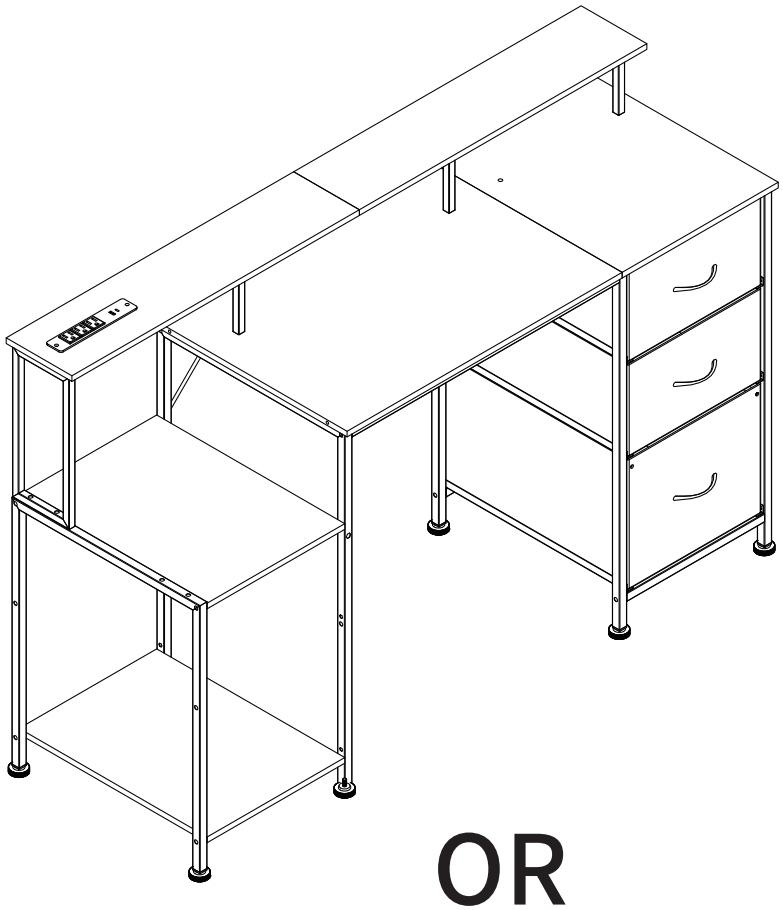

OR

P9-10

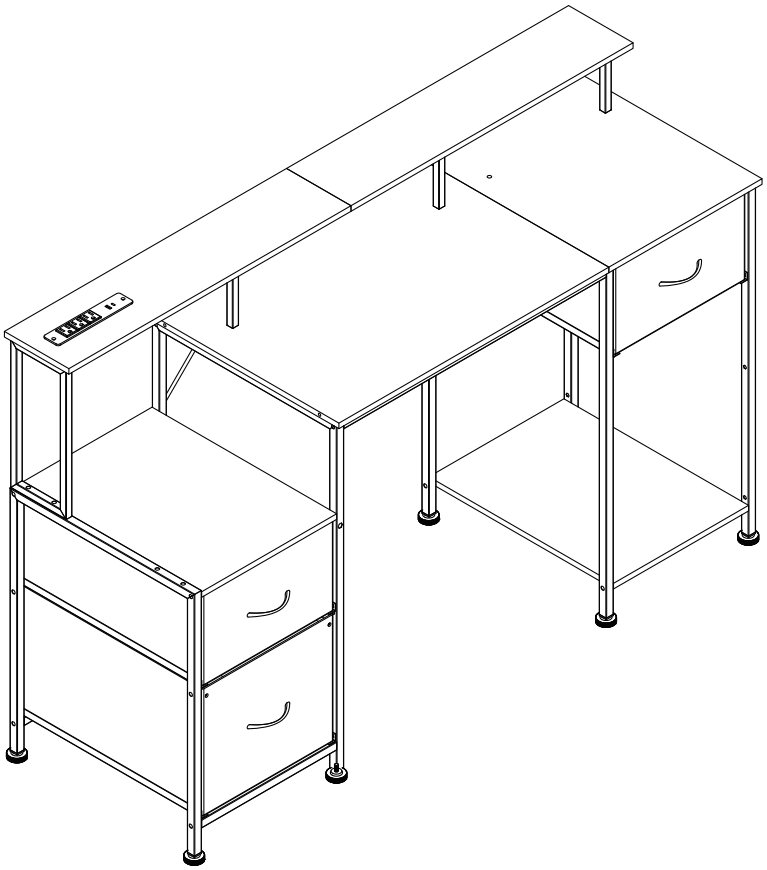

Assembly Instructions

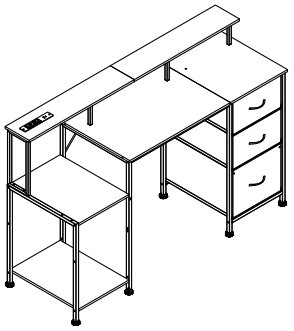

Step2:

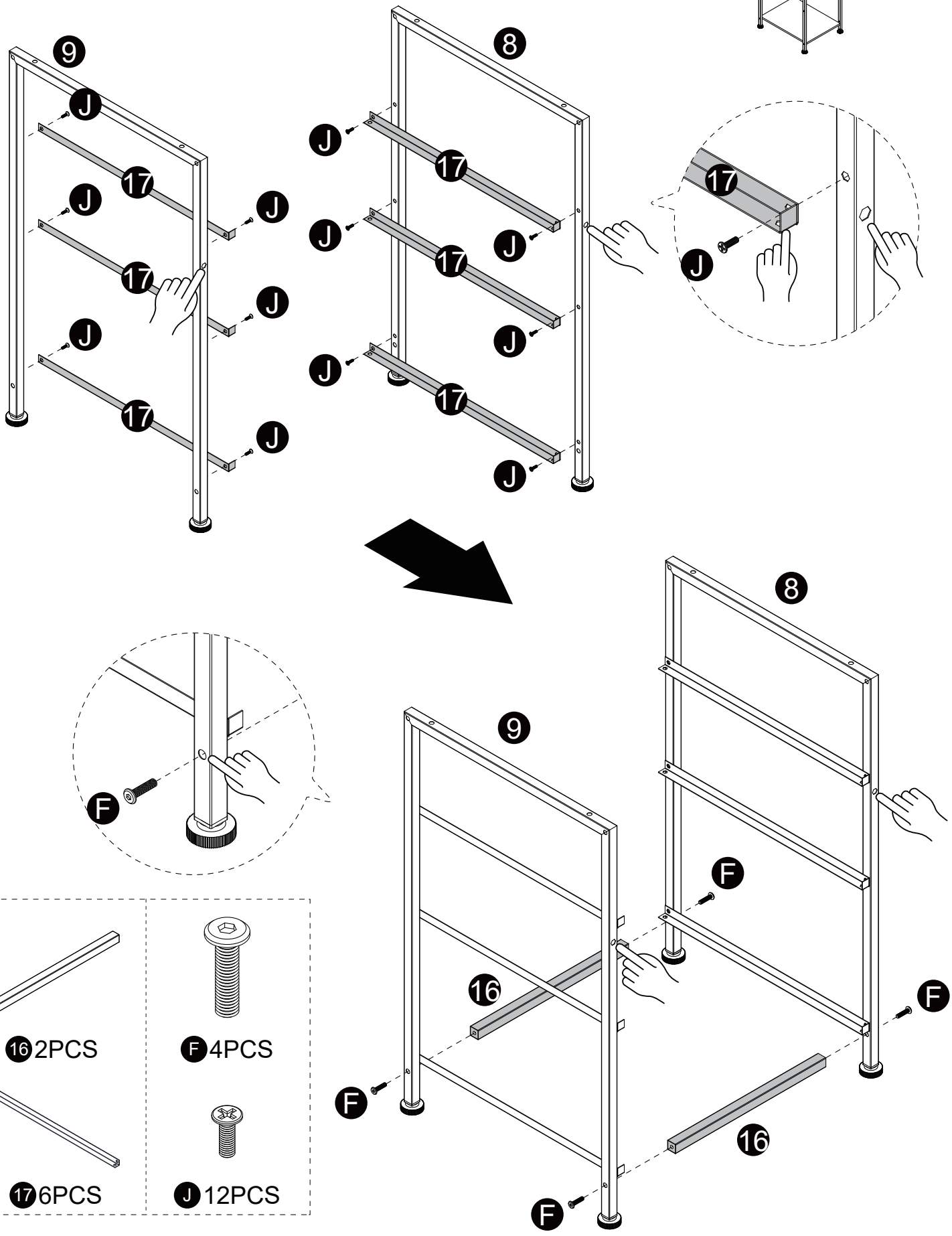

Assembly Instructions

Step3:

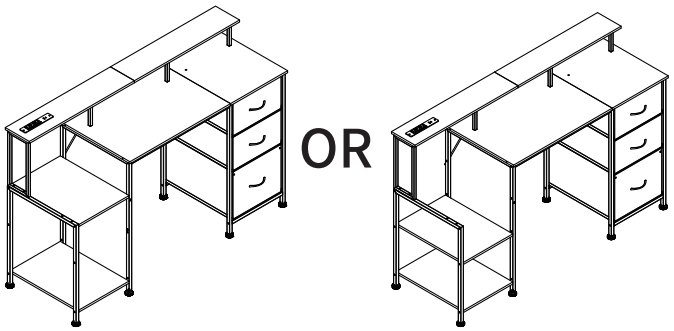

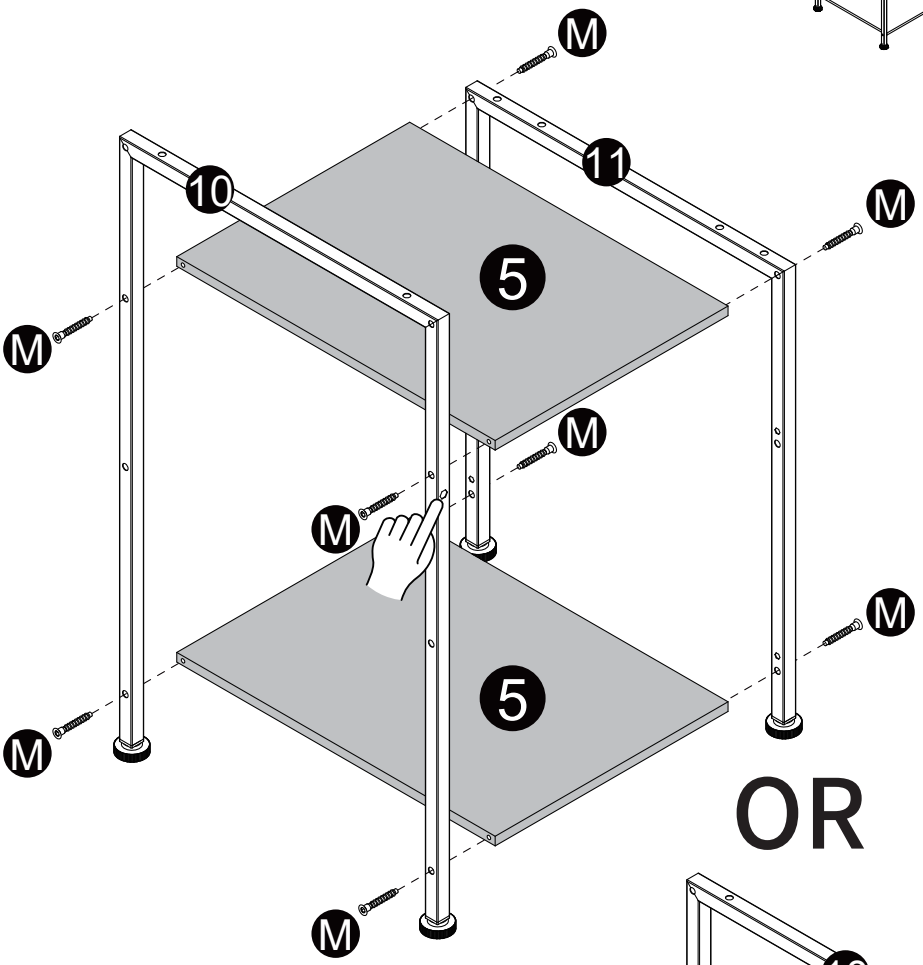

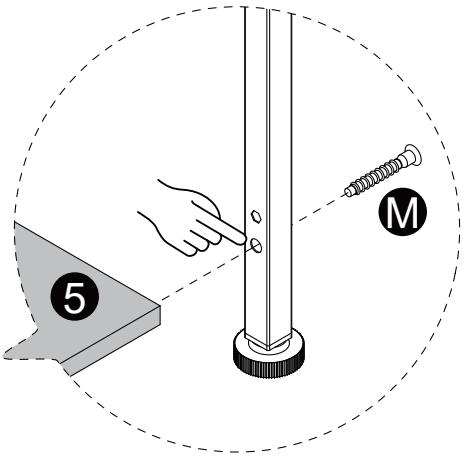

OR

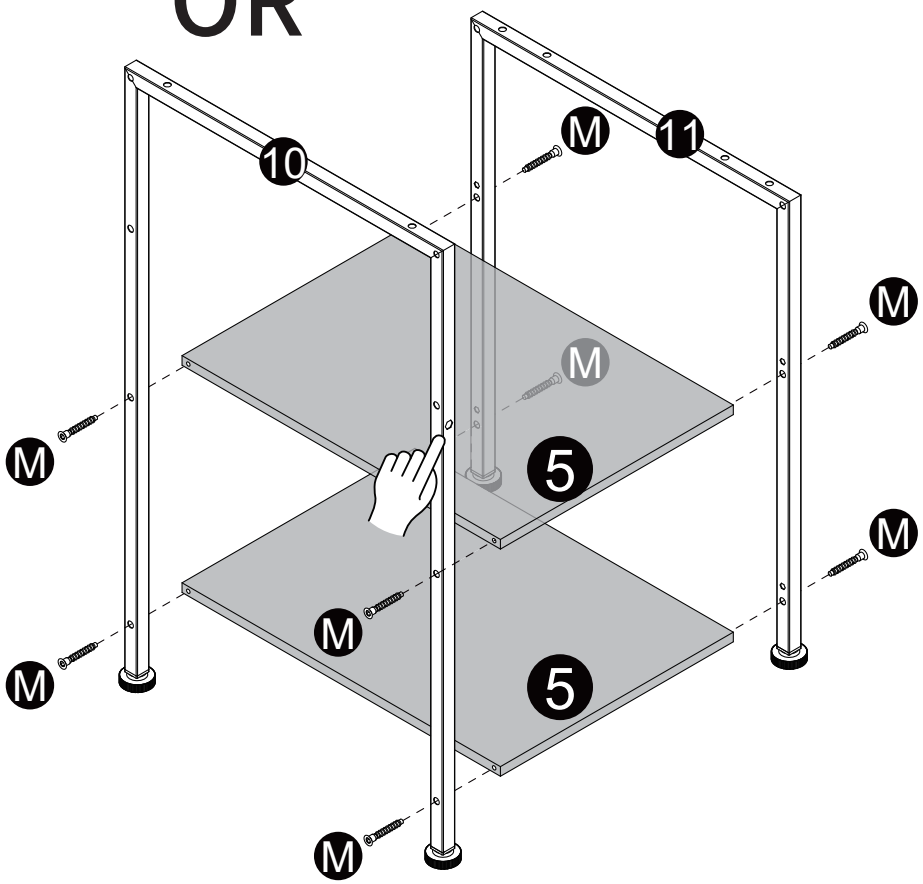

You may choose to install Board 5 to either the middle position or the topmost position.

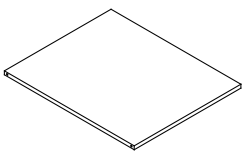

5 2PCS

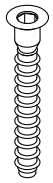

M 8PCS

Assembly Instructions

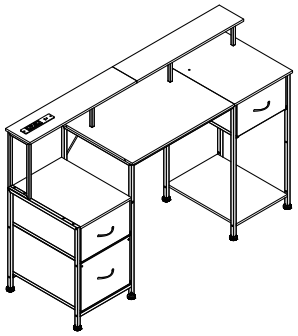

Step2:

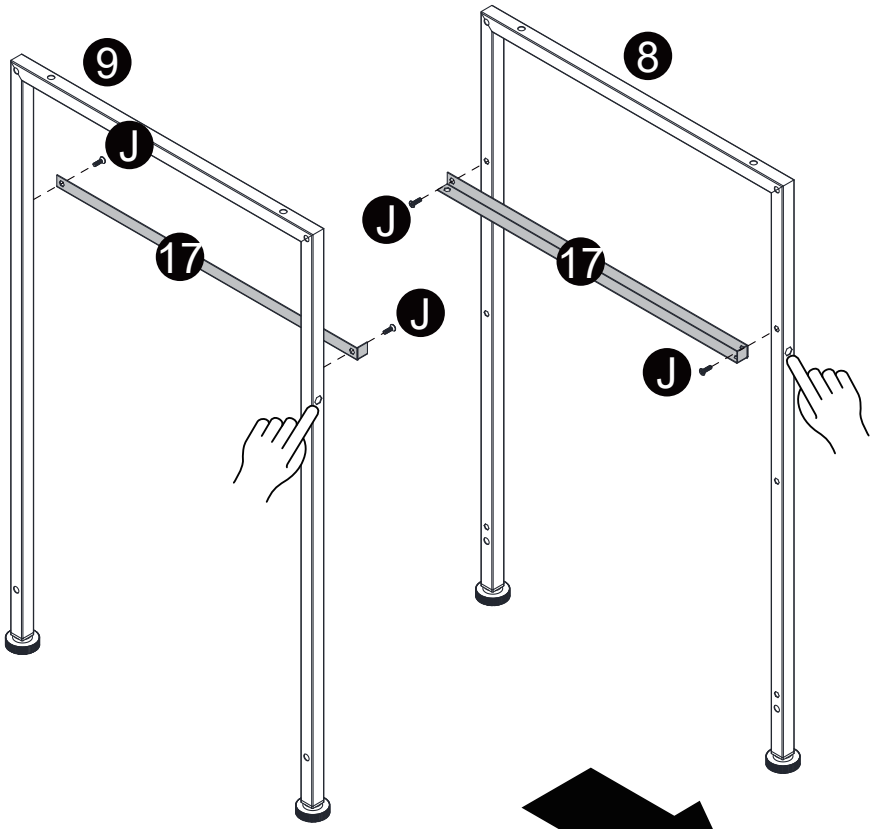

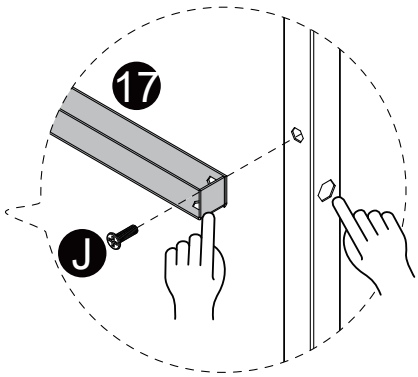

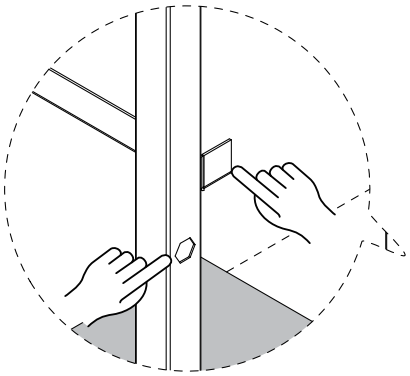

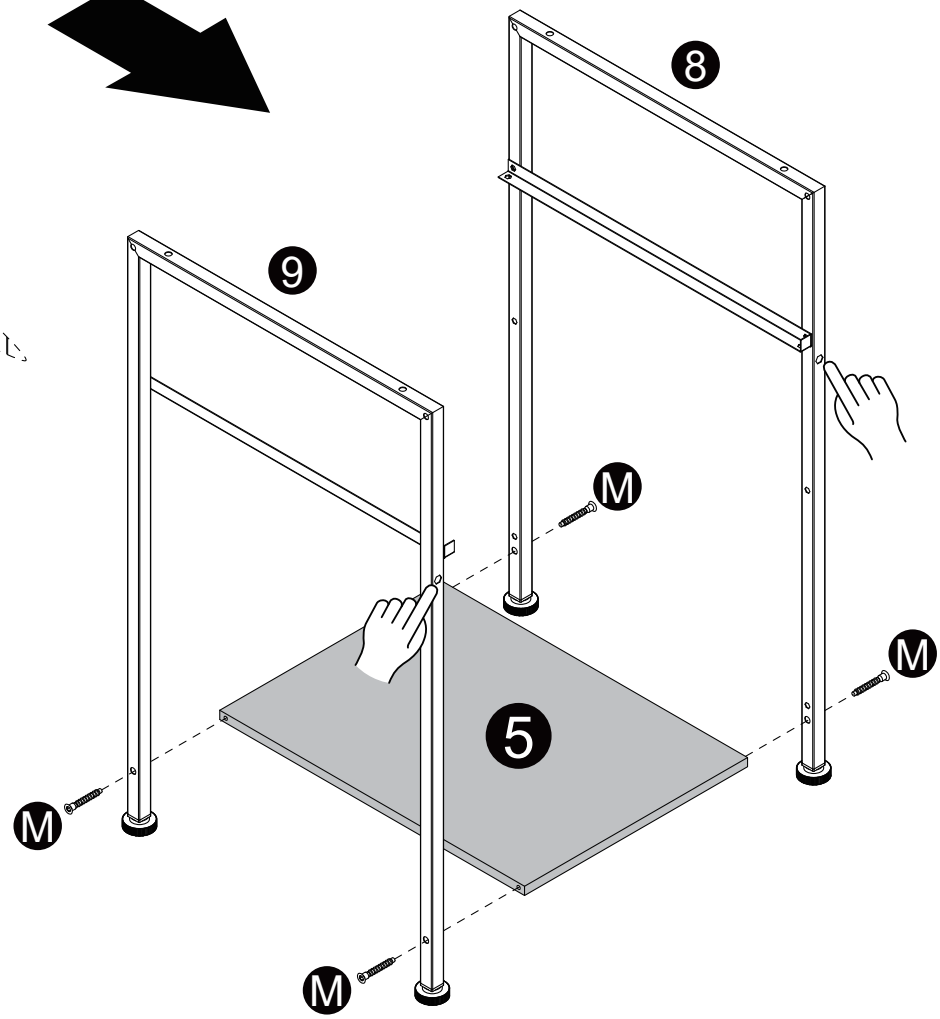

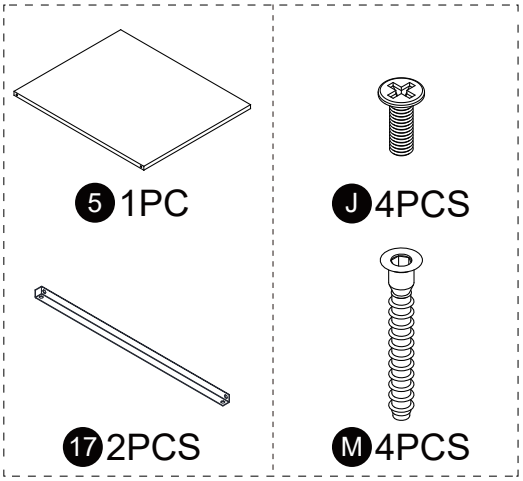

Assembly Instructions

Step3:

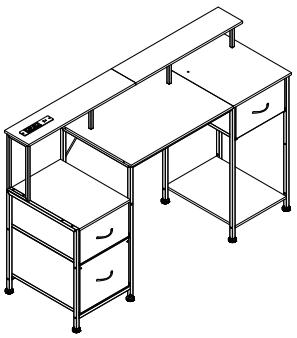

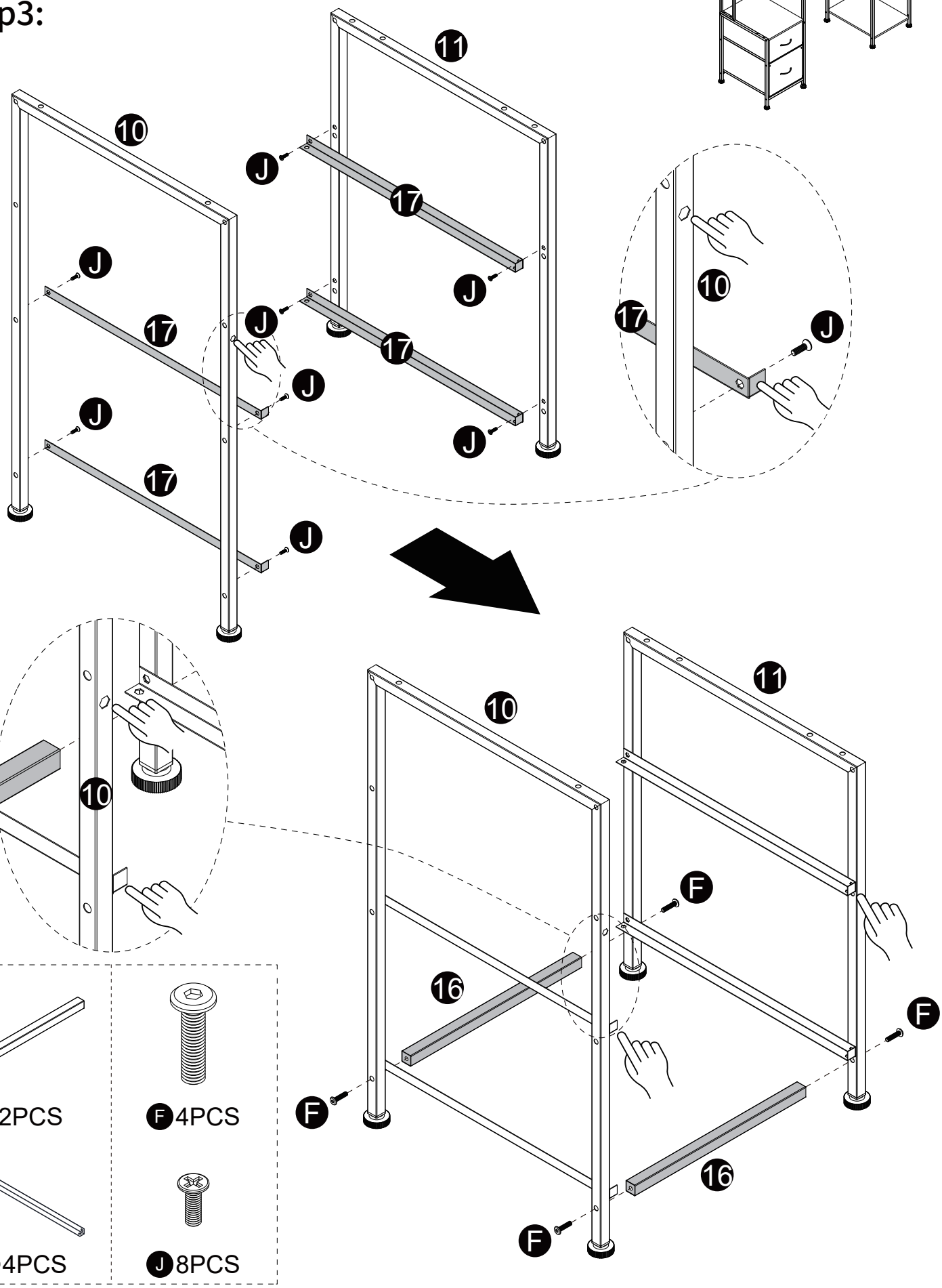

Assembly Instructions

Step4:

Please ensure the small triangle on bar ⑭ and bar ⑮ aligns with frame ⑧.

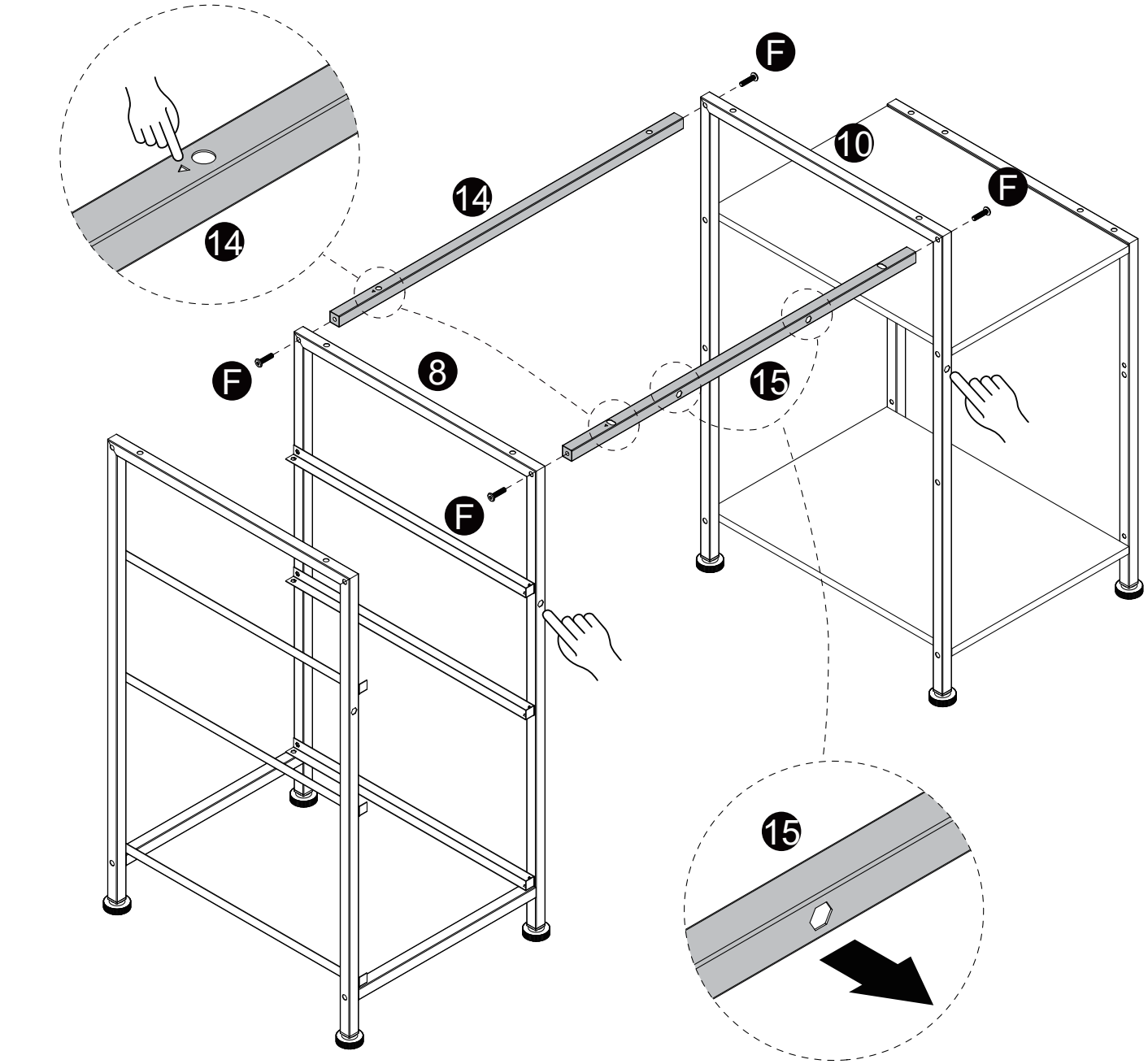

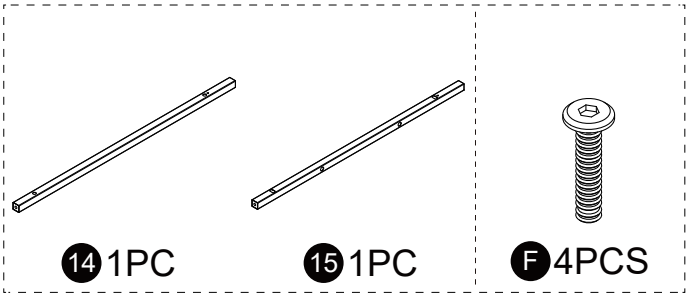

⚠ Possible problems during installation:

- There is a gap between the 2 boards.

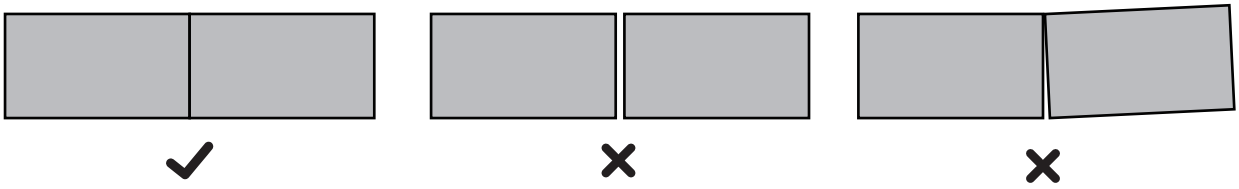

- The hole in the bar is not aligned with the hole in the board, and the screw can not be installed.

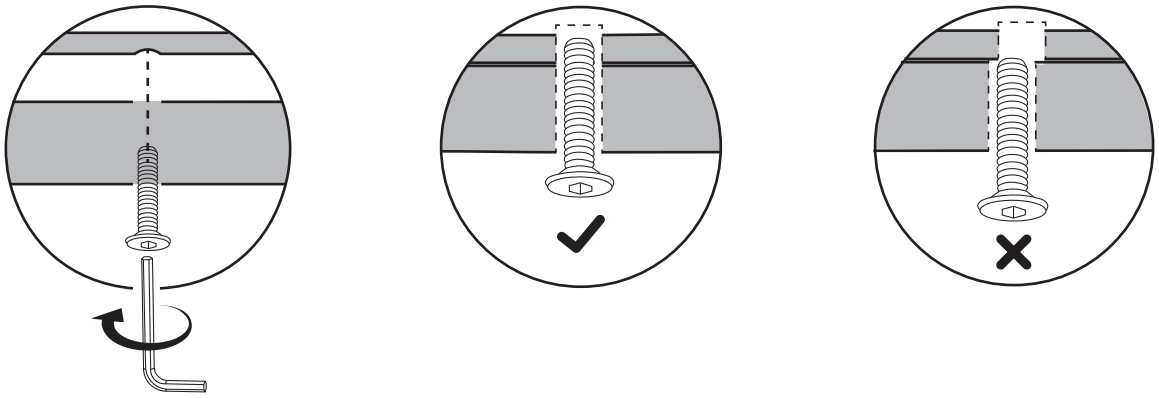

⚠ Recommended solution:

- Please loosen the screws which fix the boards, adjust the boards to make them fit together without gaps, then tighten the screws. Since the diameter of the screw hole in the bar is larger than the hole in the bolt, the position of the board can be adjusted.

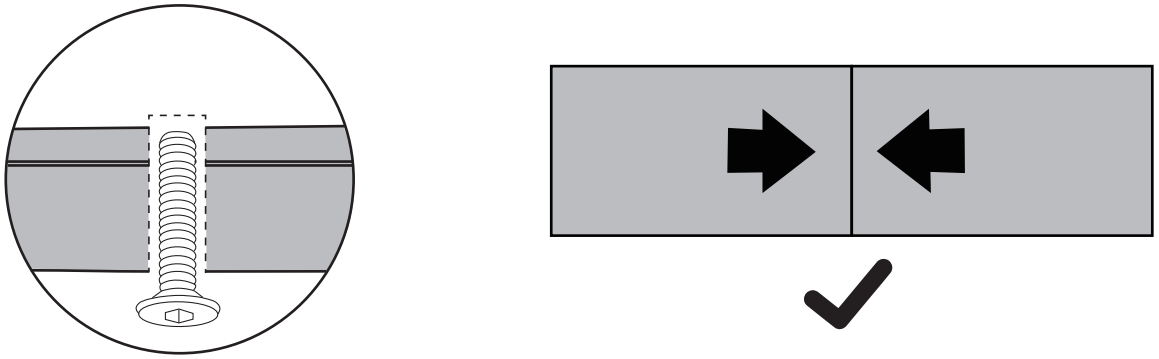

- If the above method doesn't work, please contact us with a photo of the holes, we will help you further.

Assembly Instructions

Step5:

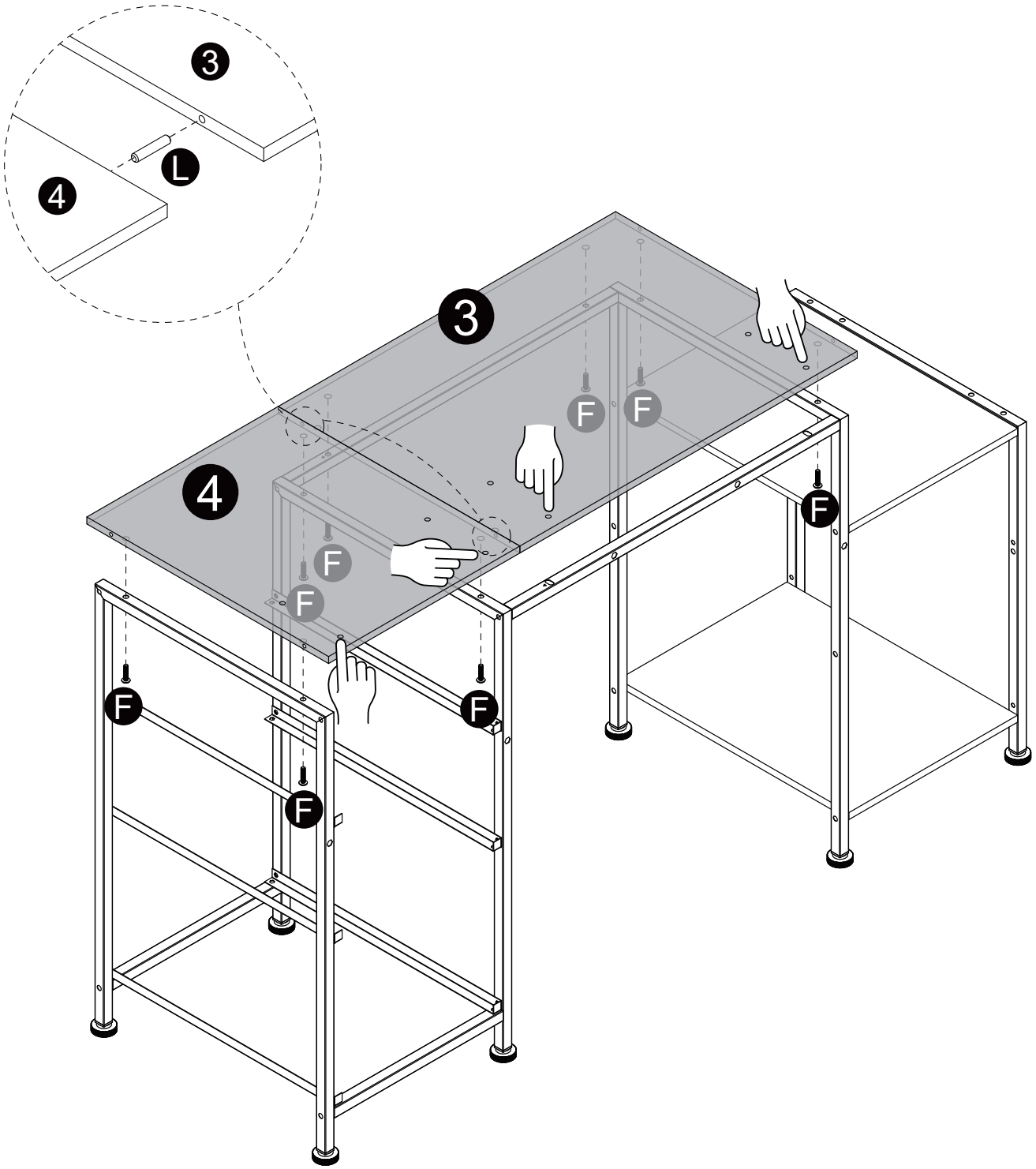

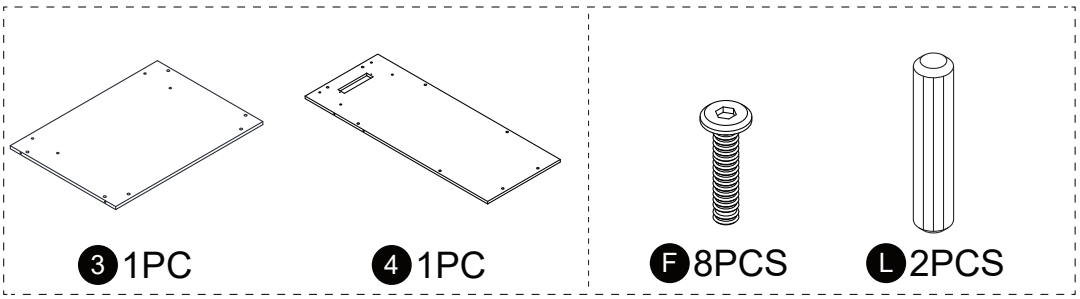

Assembly Instructions

Step6:

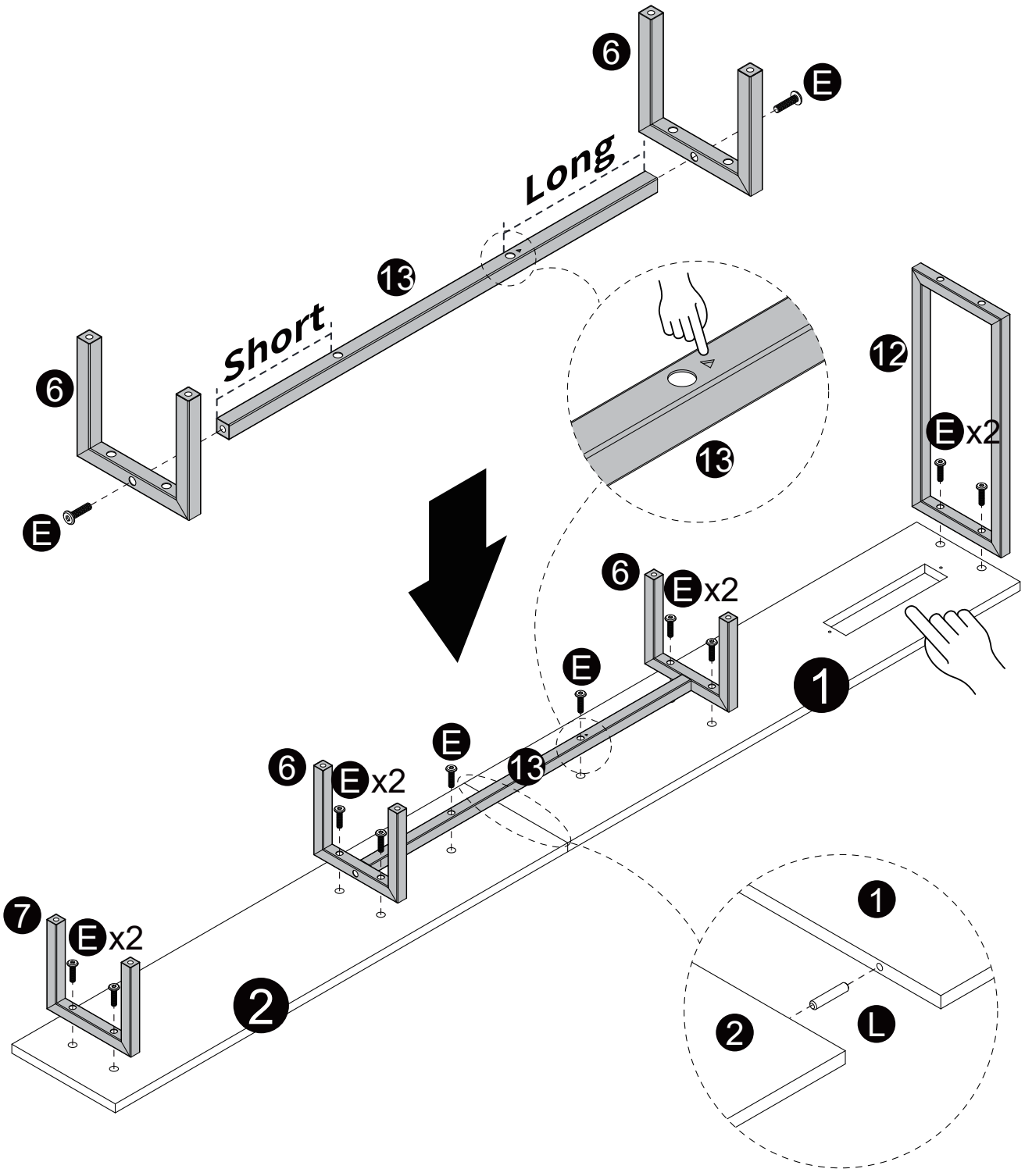

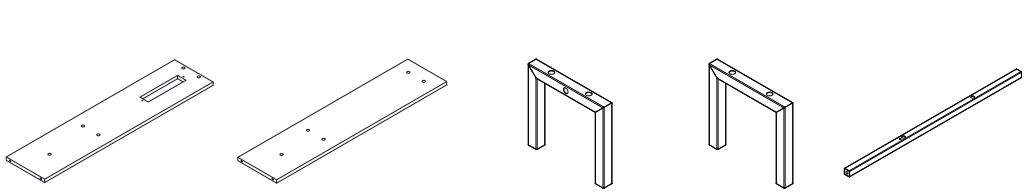

1 1PC | 2 1PC | 6 2PCS | 7 1PC | 13 1PC

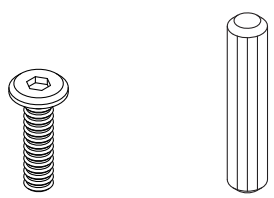

E 12PCS | L 2PCS

Assembly Instructions

Step7:

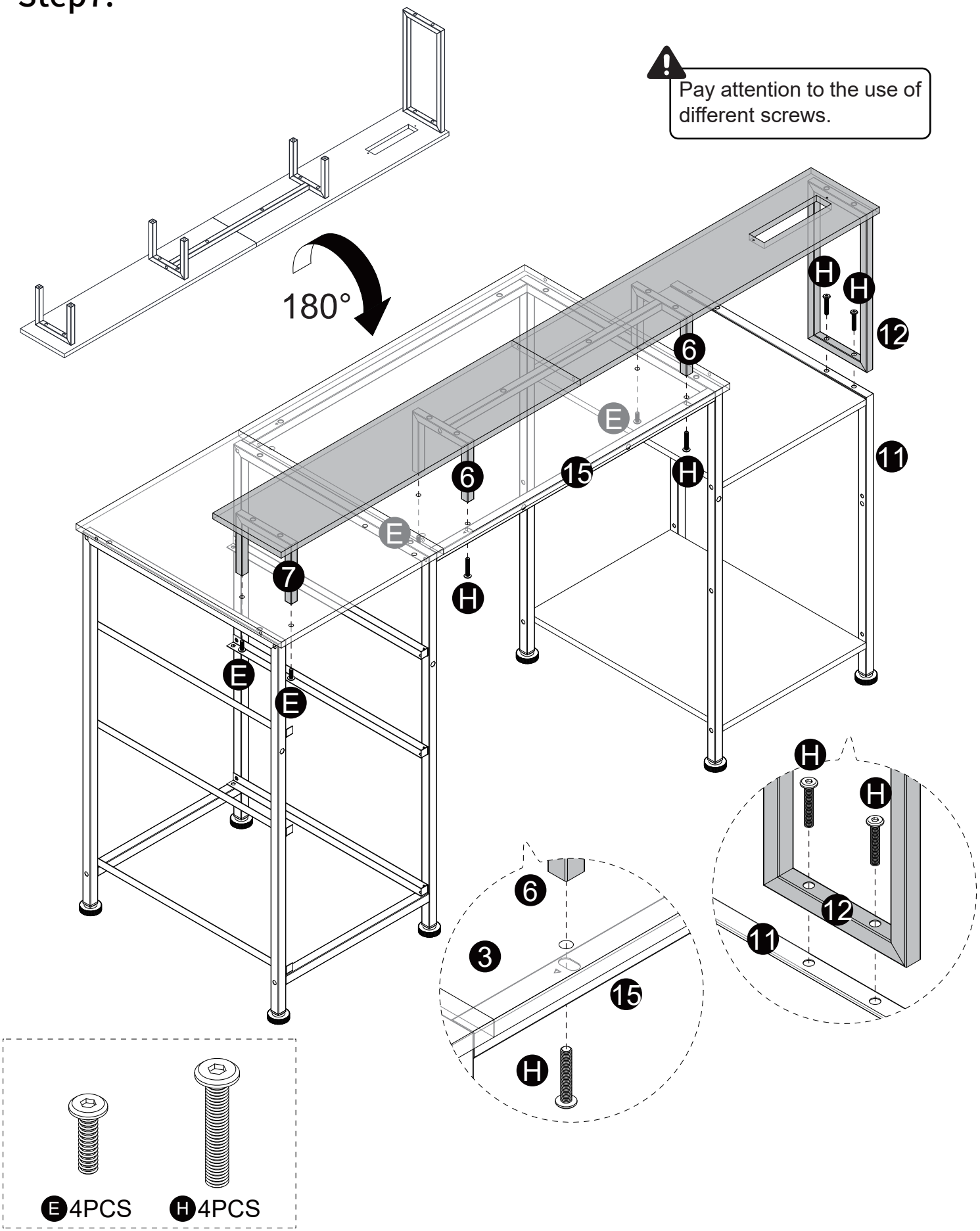

Assembly Instructions

Step8:

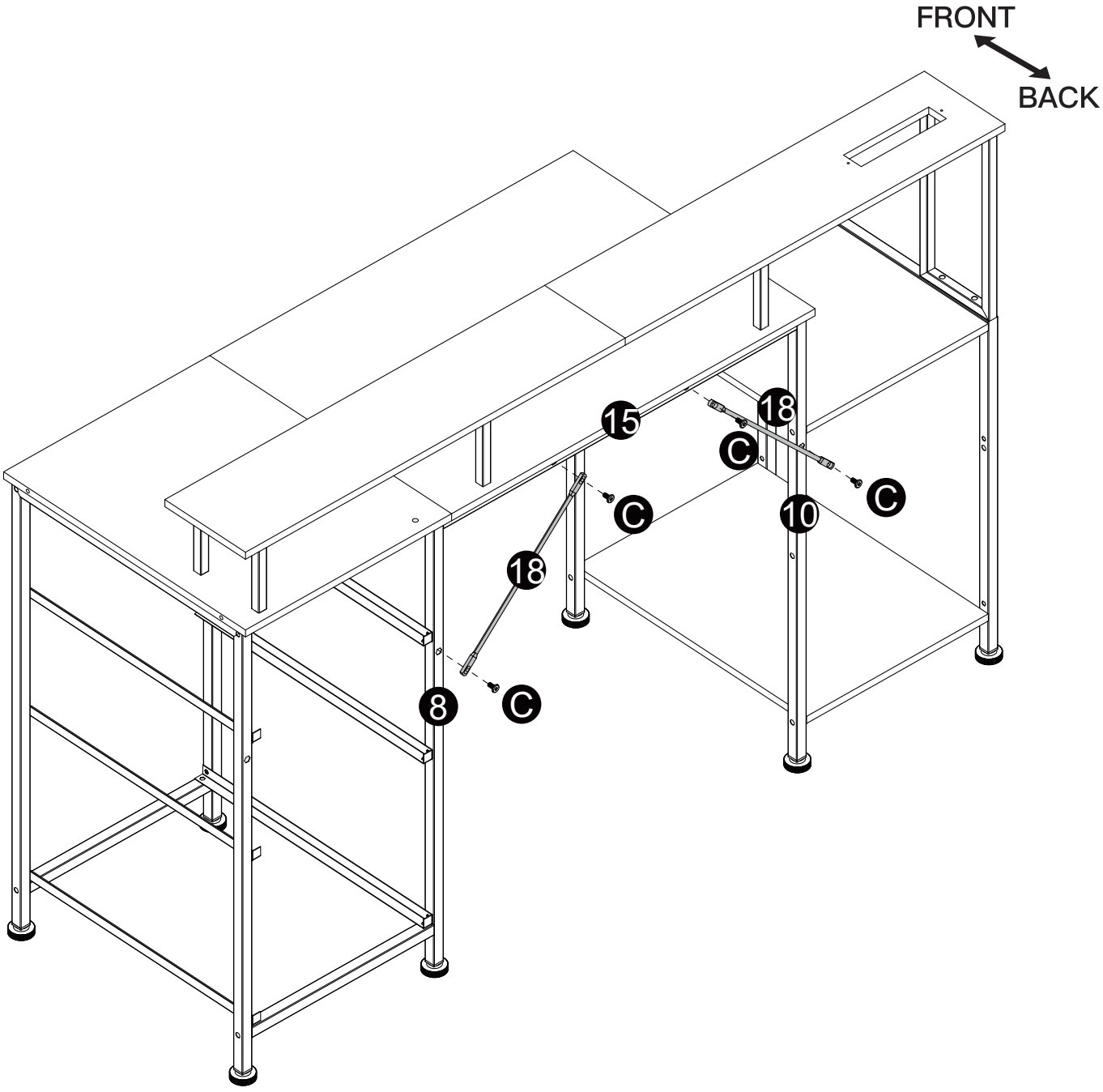

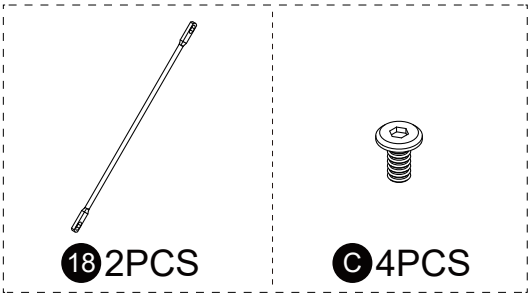

Assembly Instructions

Step9:

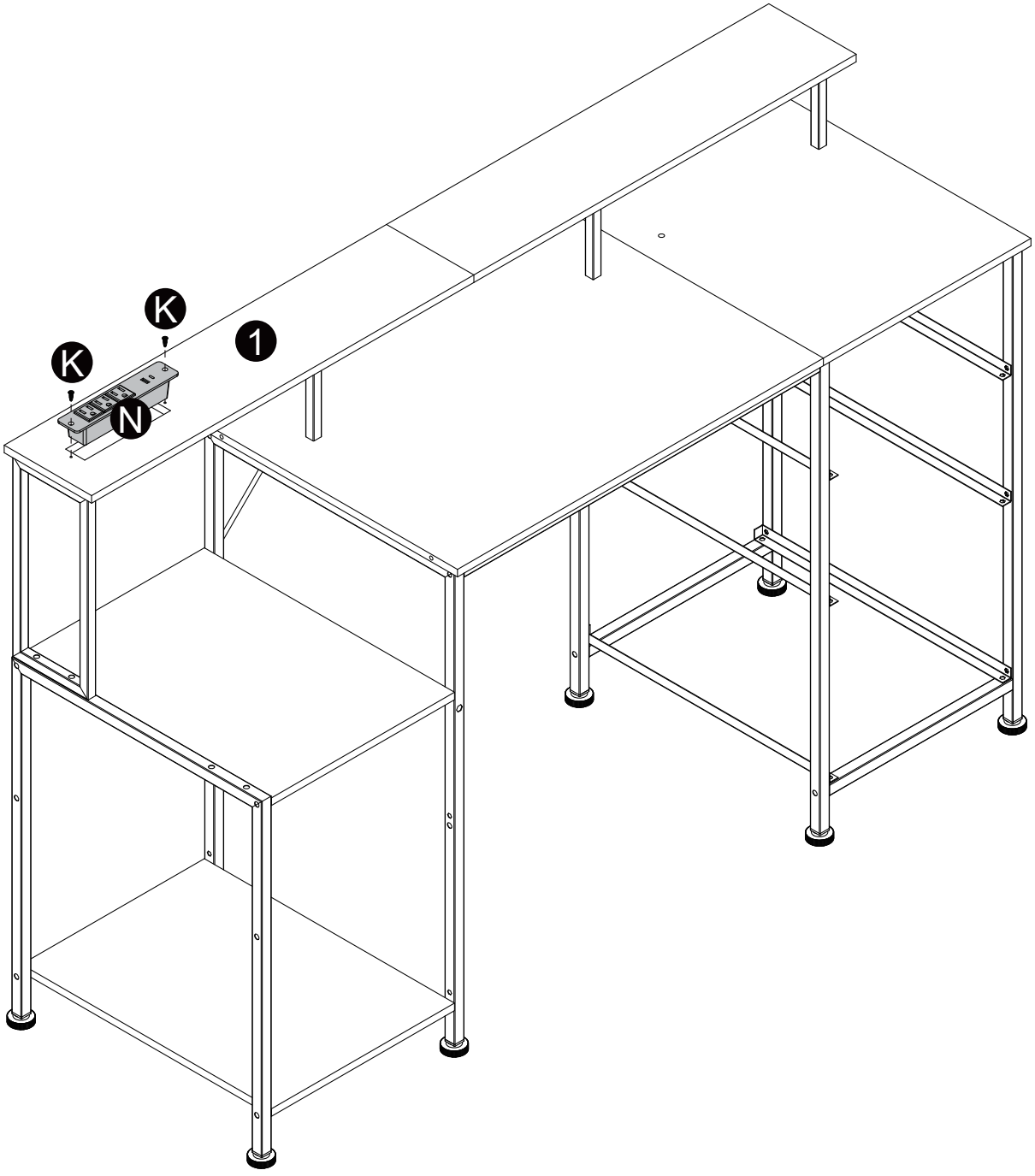

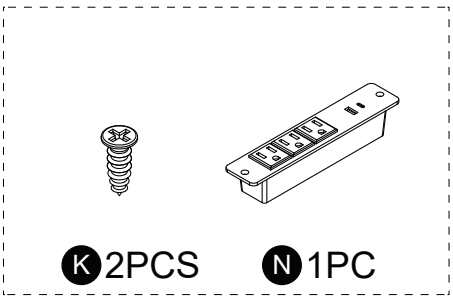

Assembly Instructions

Step10:

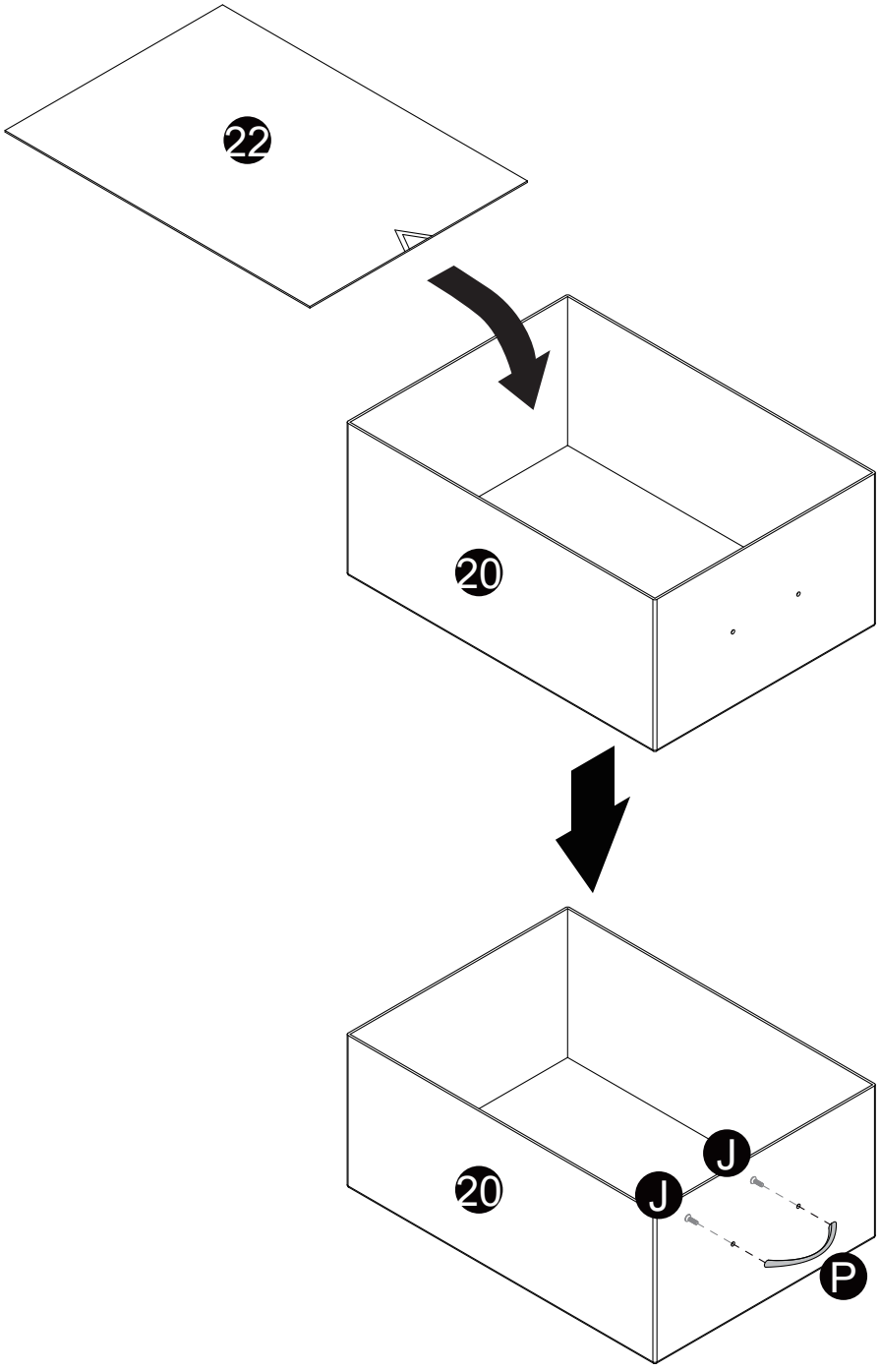

x2

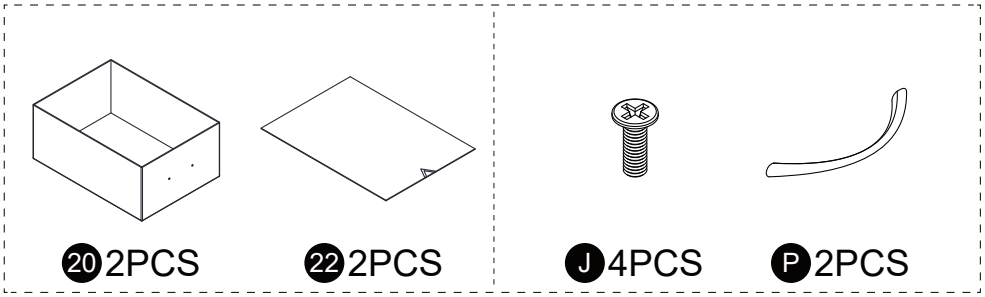

Assembly Instructions

Step11:

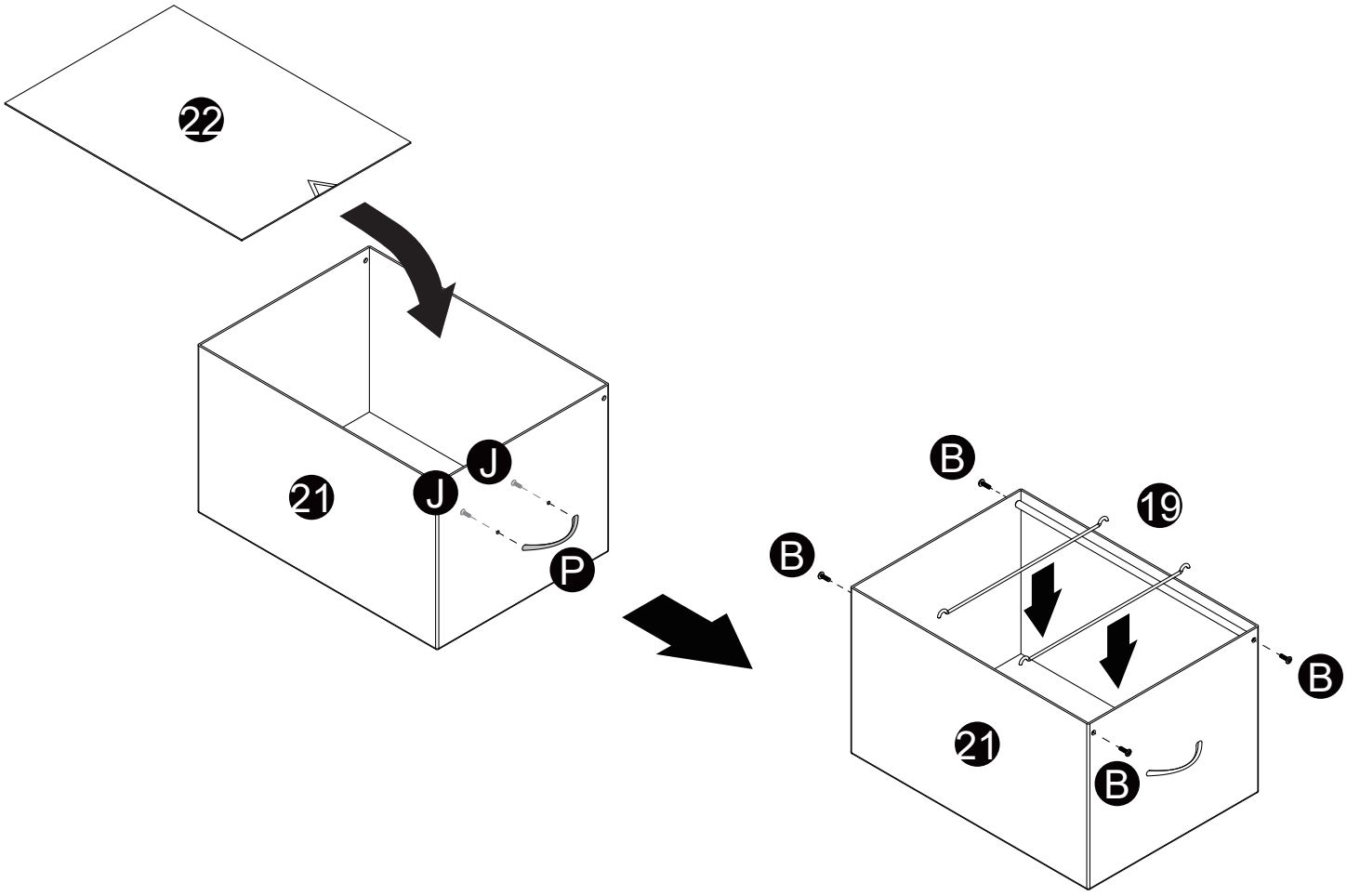

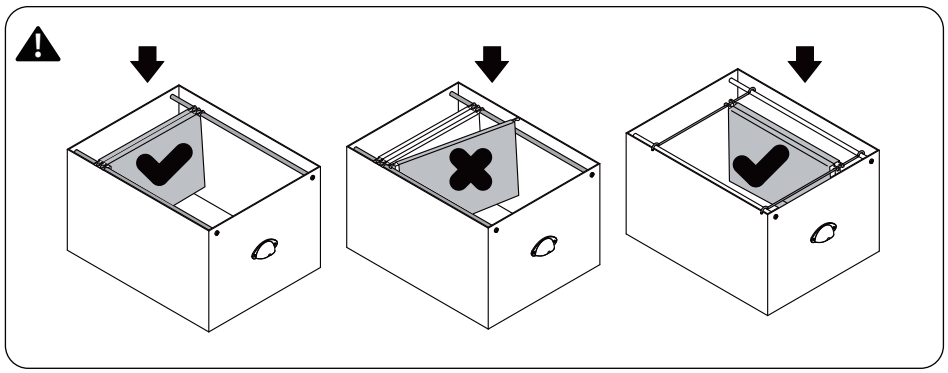

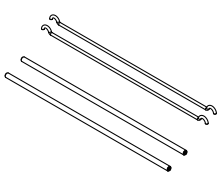

19 1PC

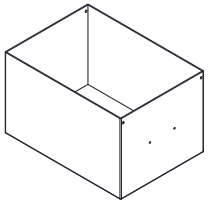

21 1PC

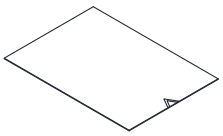

22 1PC

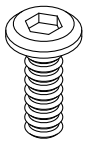

B 4PCS



J 2PCS



P 1PC

Assembly Instructions

Step12:

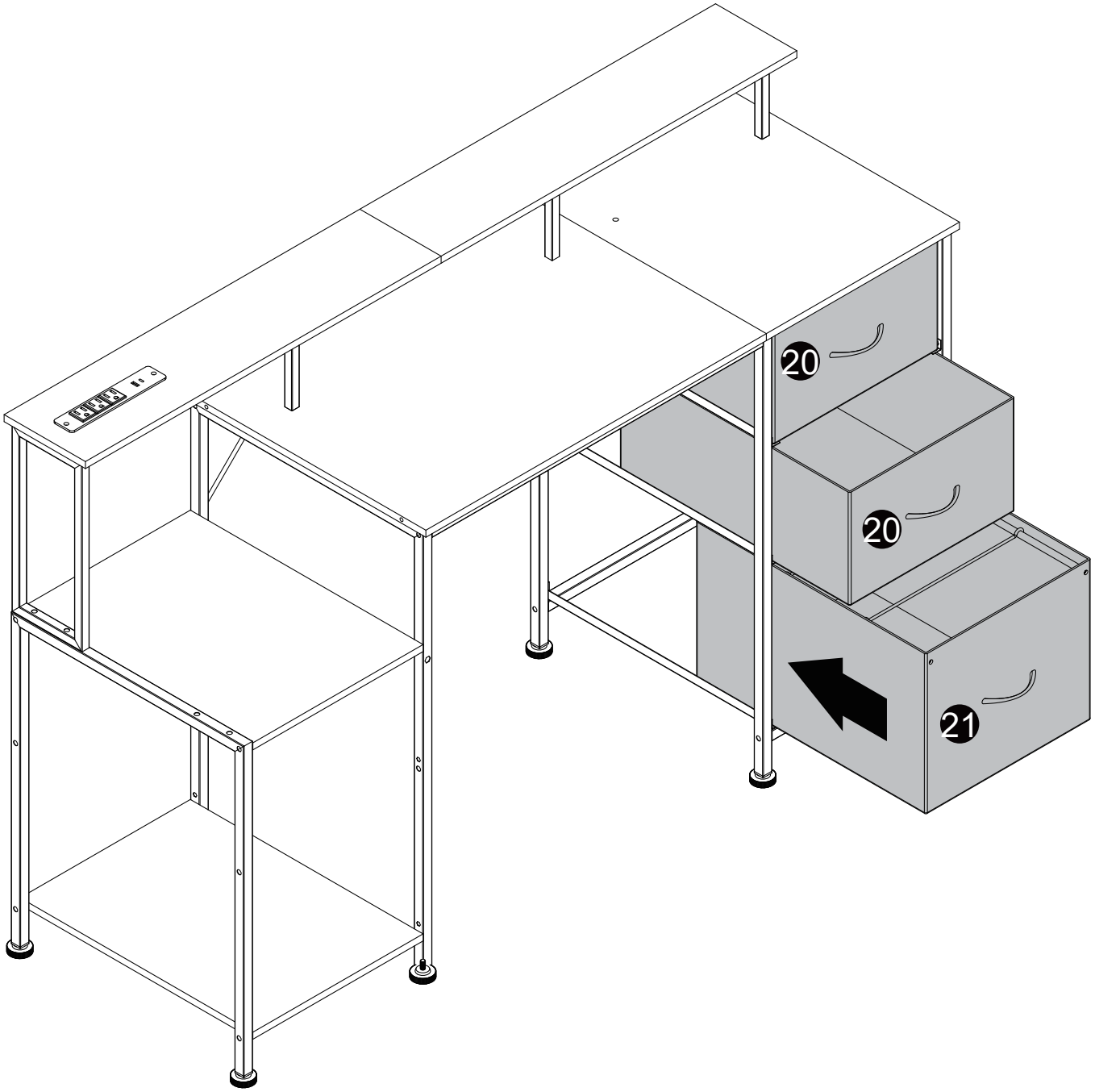

Assembly Instructions

Step13:

Note: The USB interface of the light strip should face the same direction as the socke.

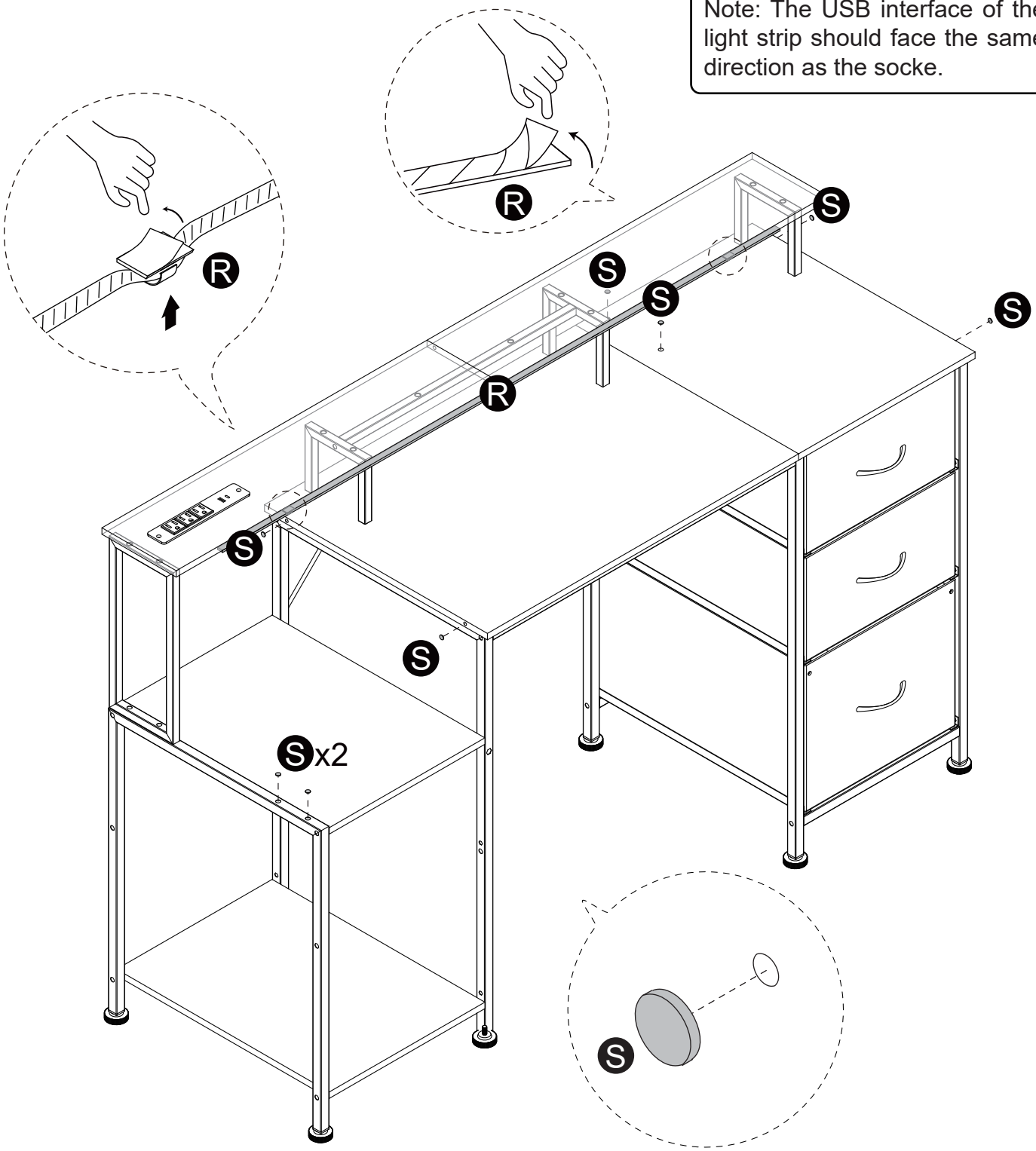

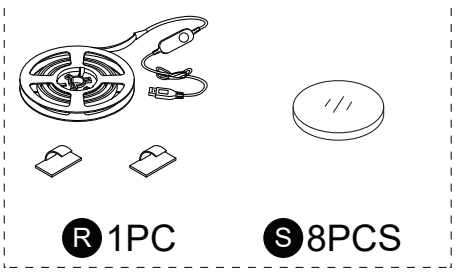

R 1PC S 8PCS

Some holes are not required for installation. If you do not want the holes to be exposed, you can stick on hole stickers.

Assembly Instructions

Step1:

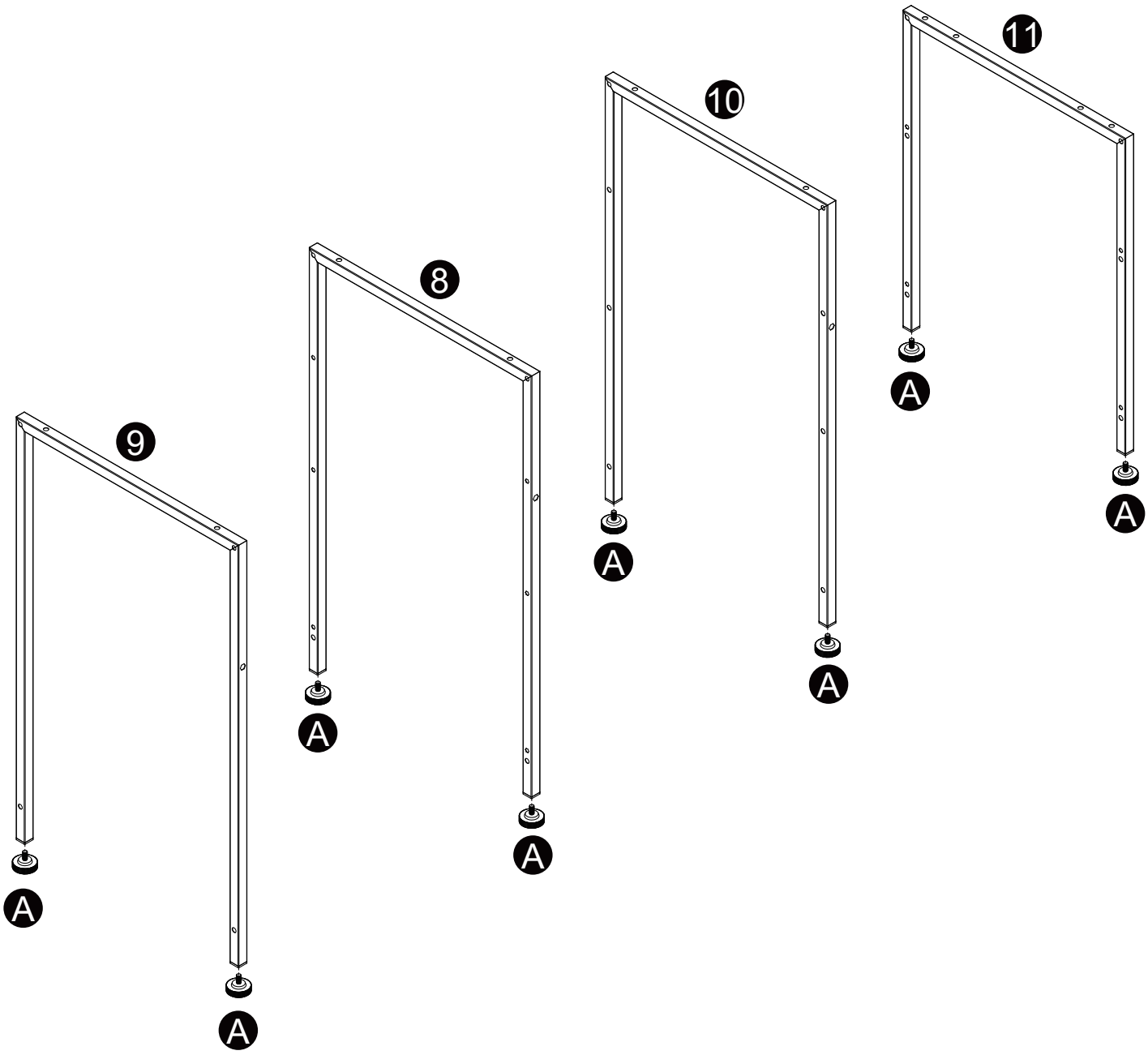

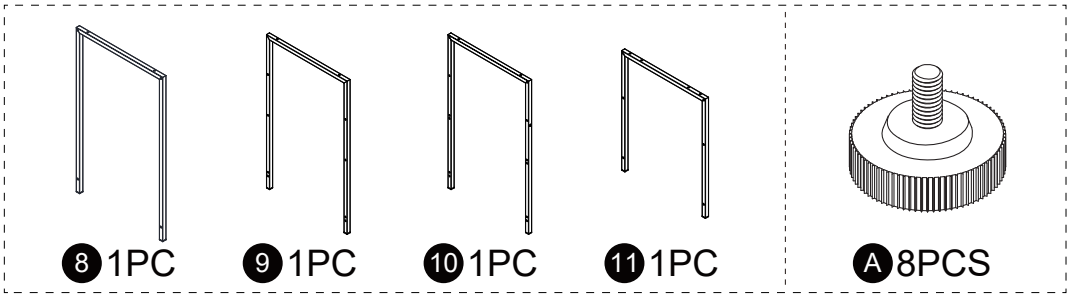

Assembly Instructions

We provide 2 installation methods for you to choose from.You can freely combine Boards and Drawers according to your needs.

P24-25

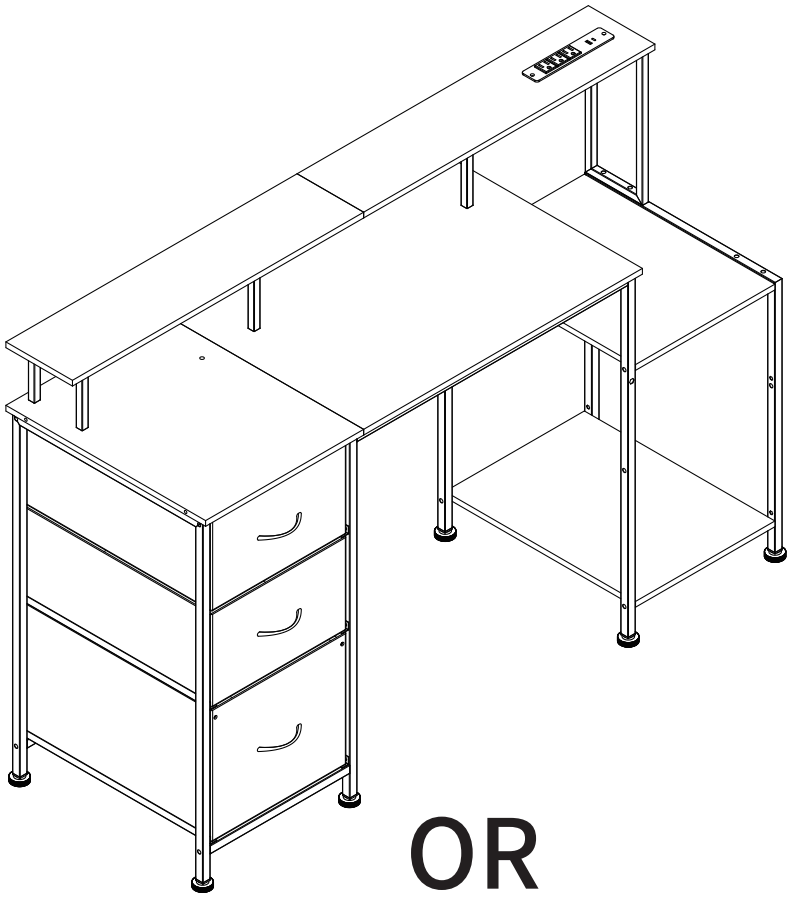

OR

P26-27

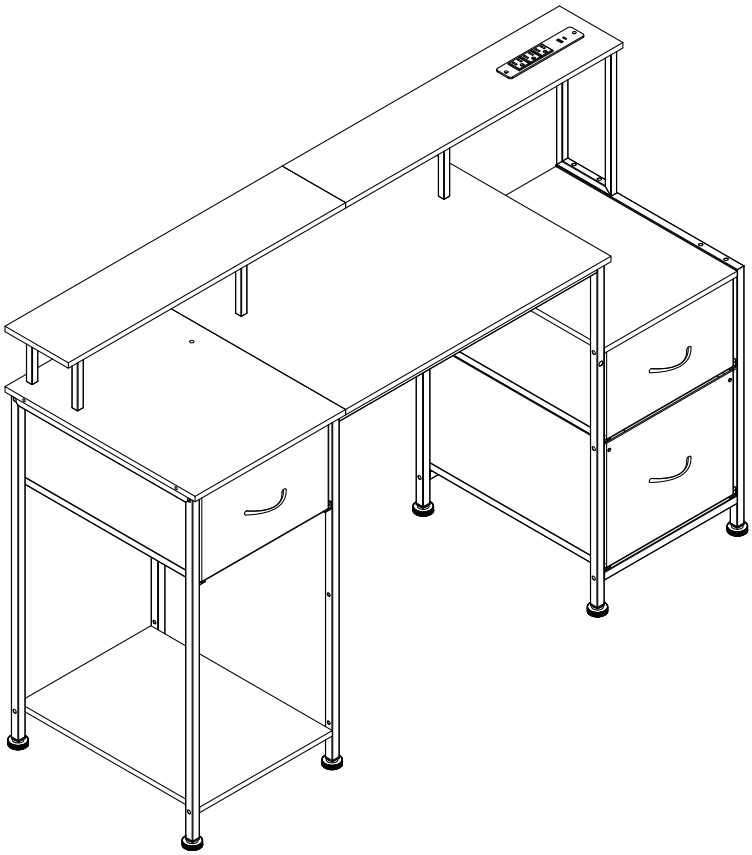

Assembly Instructions

Step2:

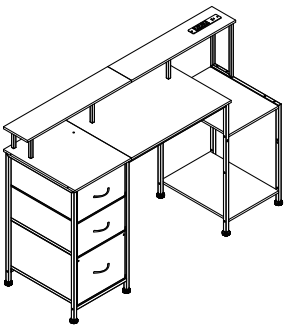

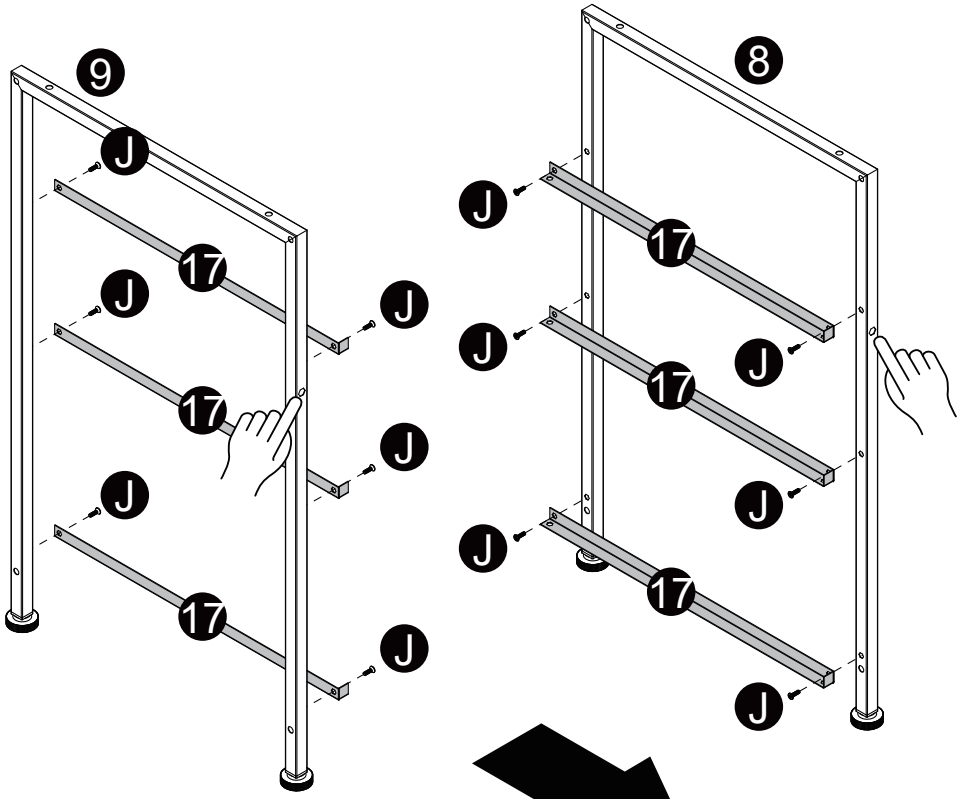

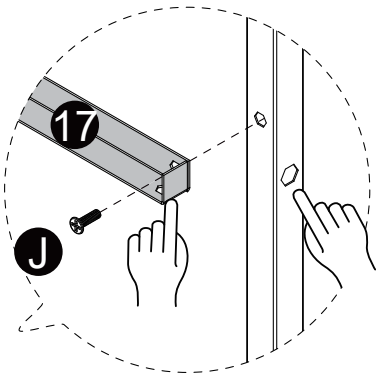

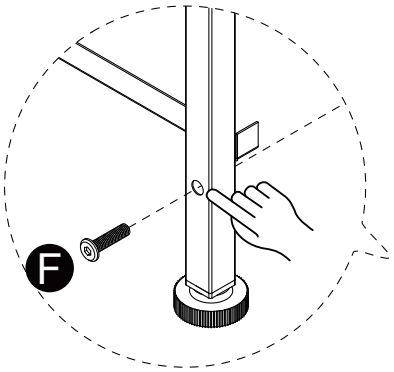

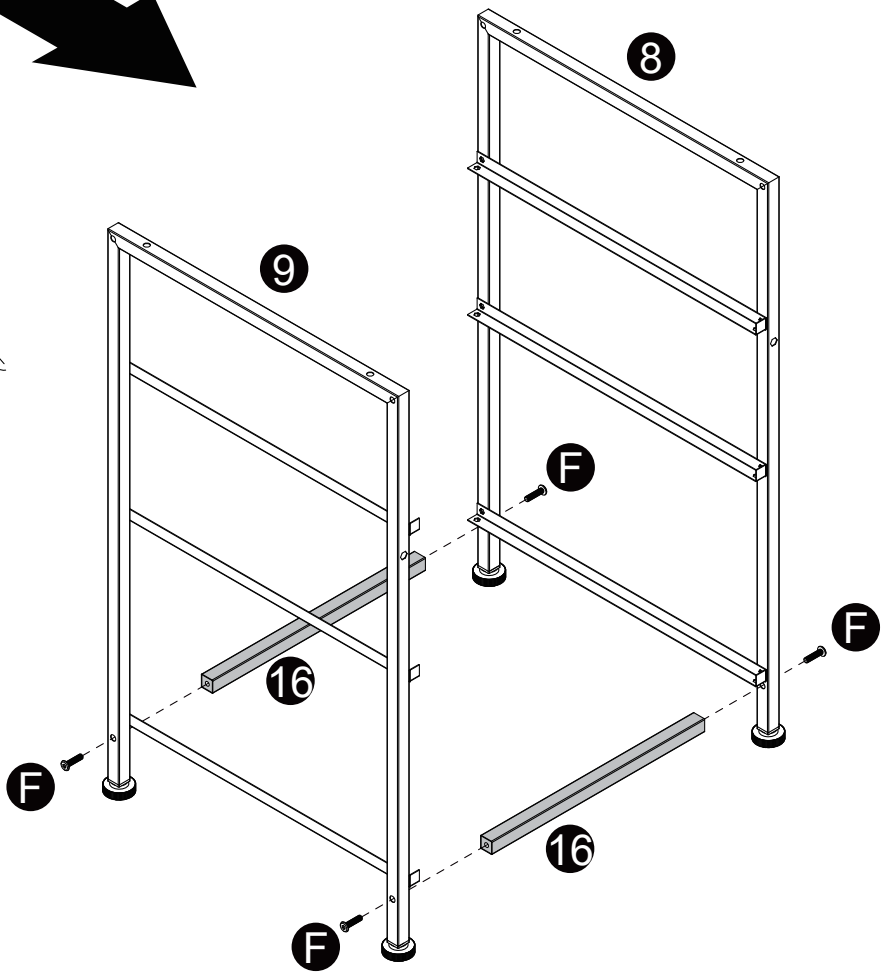

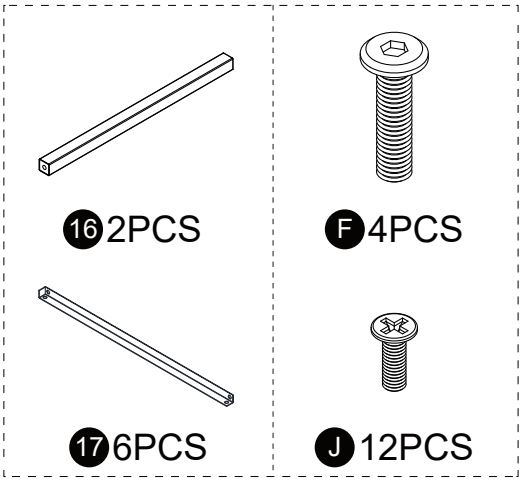

Assembly Instructions

Step3:

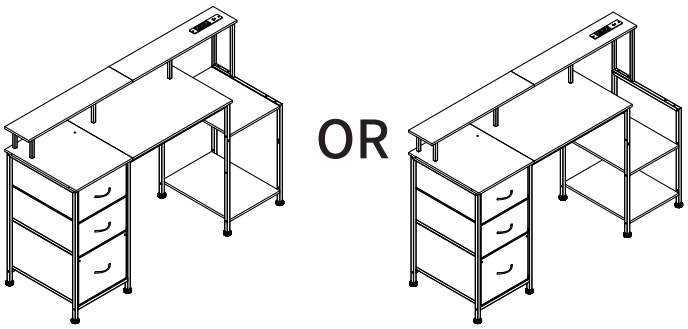

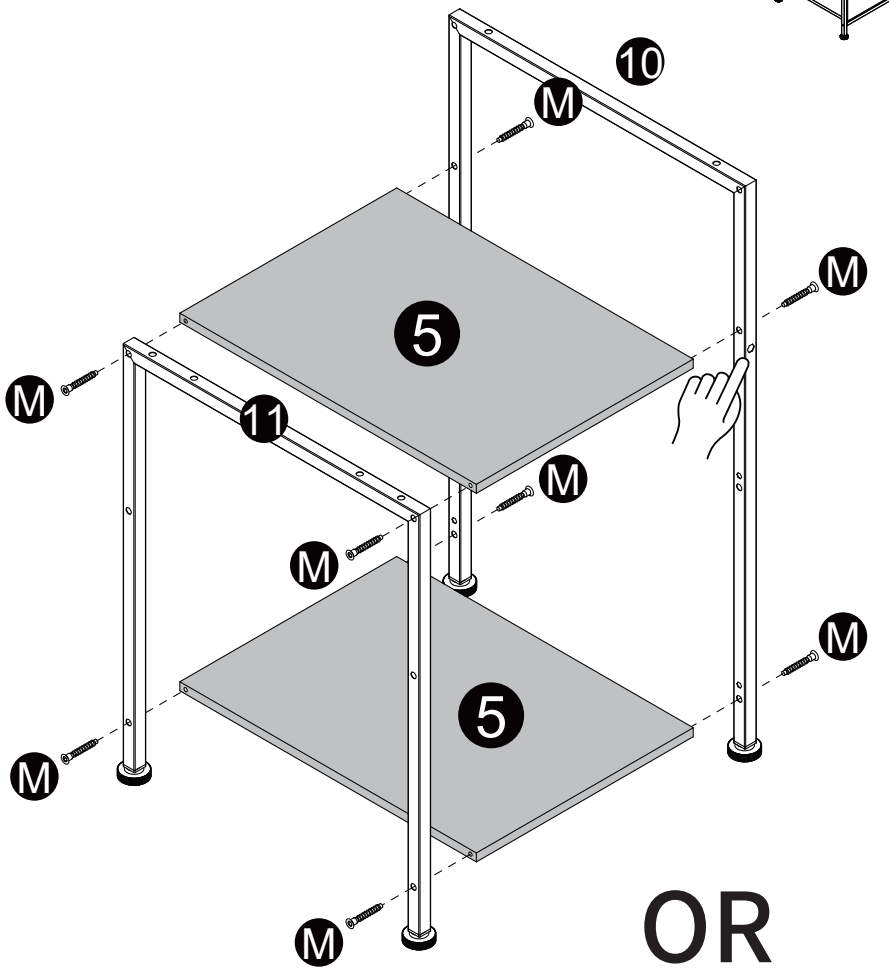

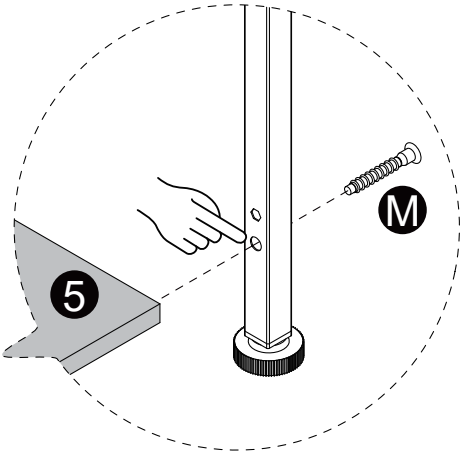

OR

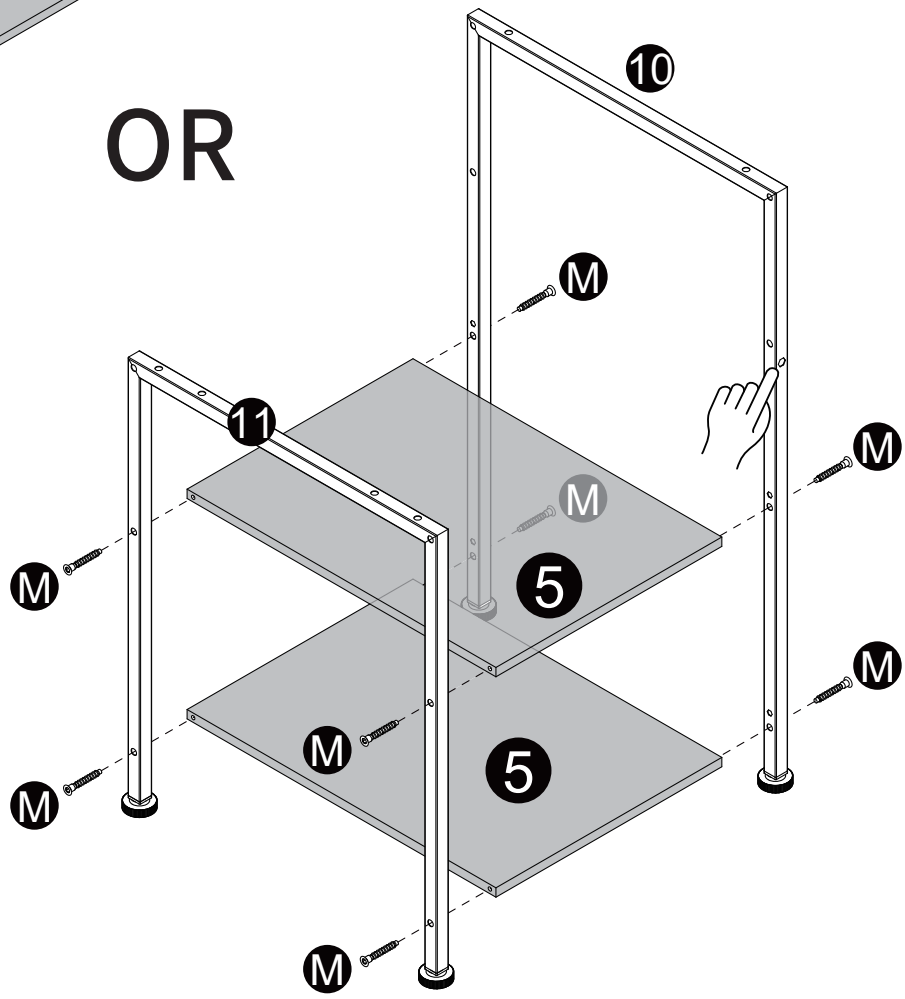

You may choose to install Board 5 to either the middle position or the topmost position.

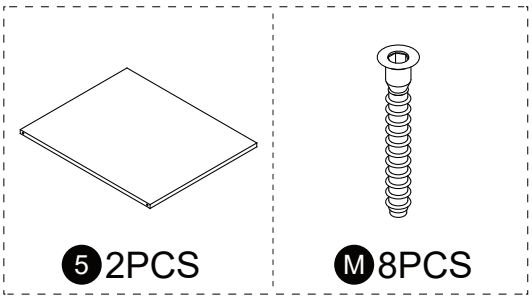

Assembly Instructions

Step2:

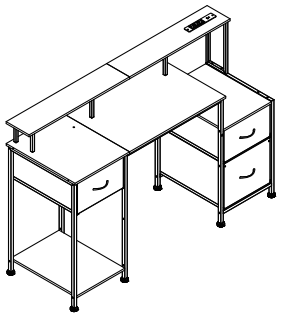

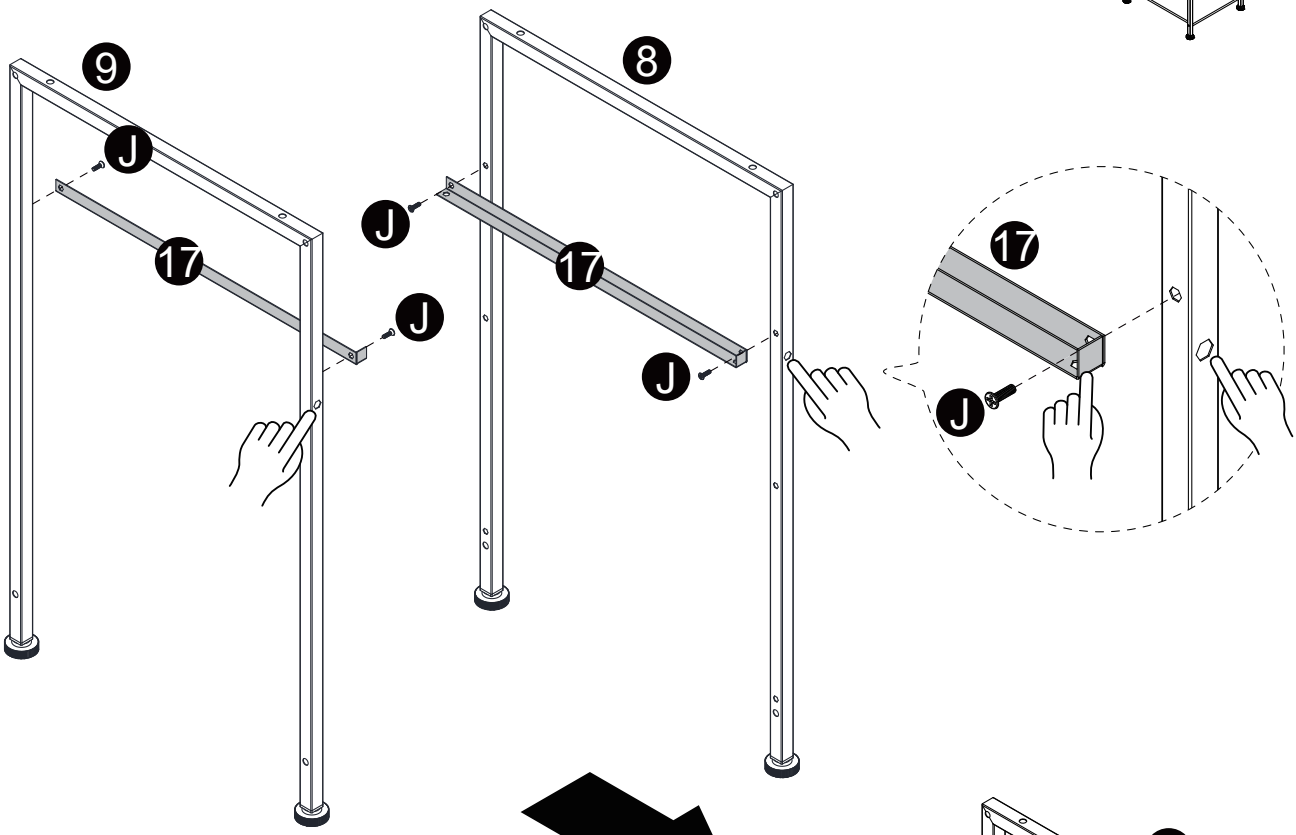

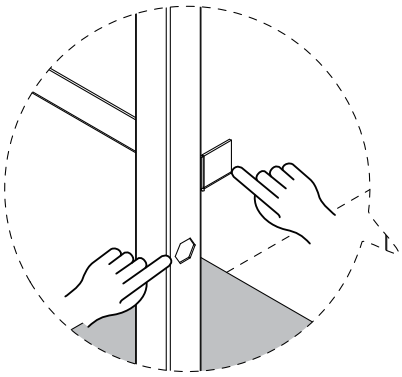

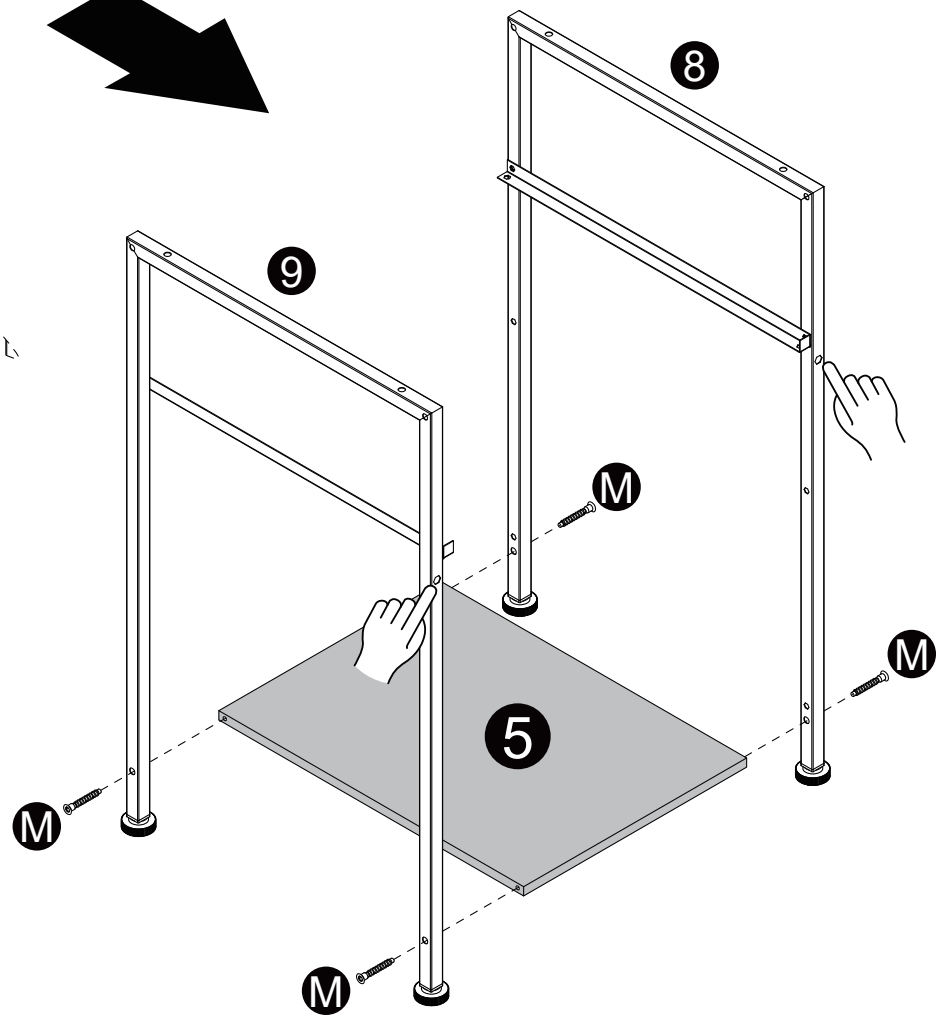

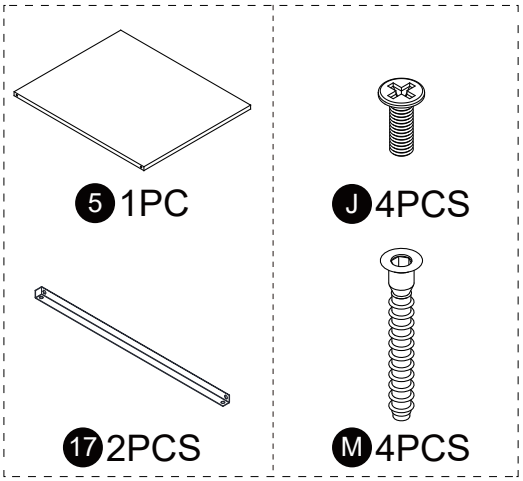

Assembly Instructions

Step3:

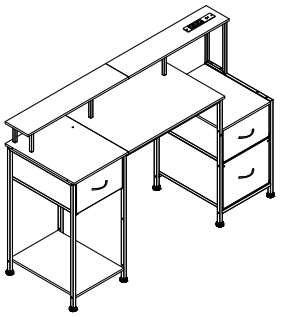

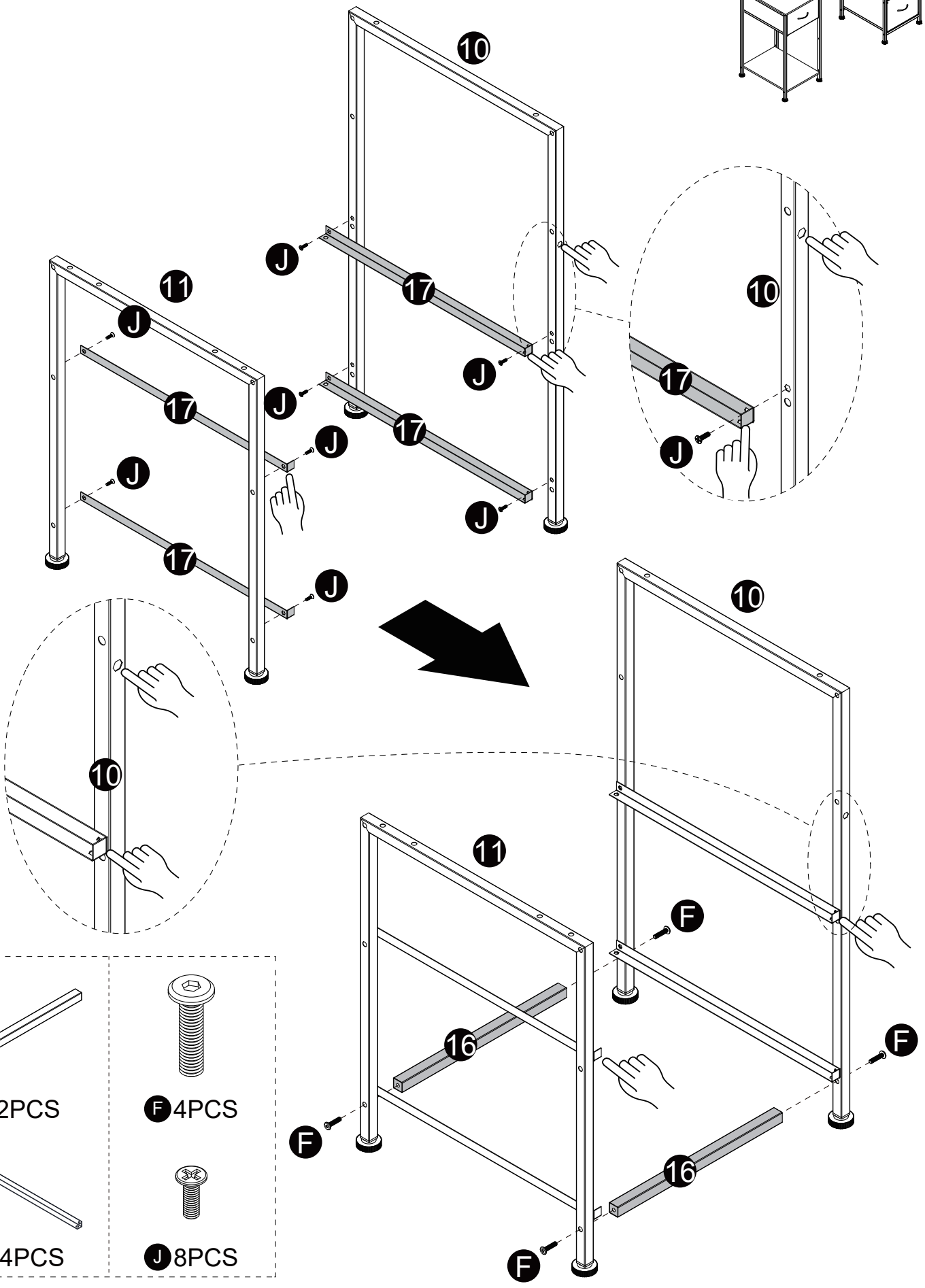

16 2PCS	F 4PCS
17 4PCS	J 8PCS

Assembly Instructions

Step4:

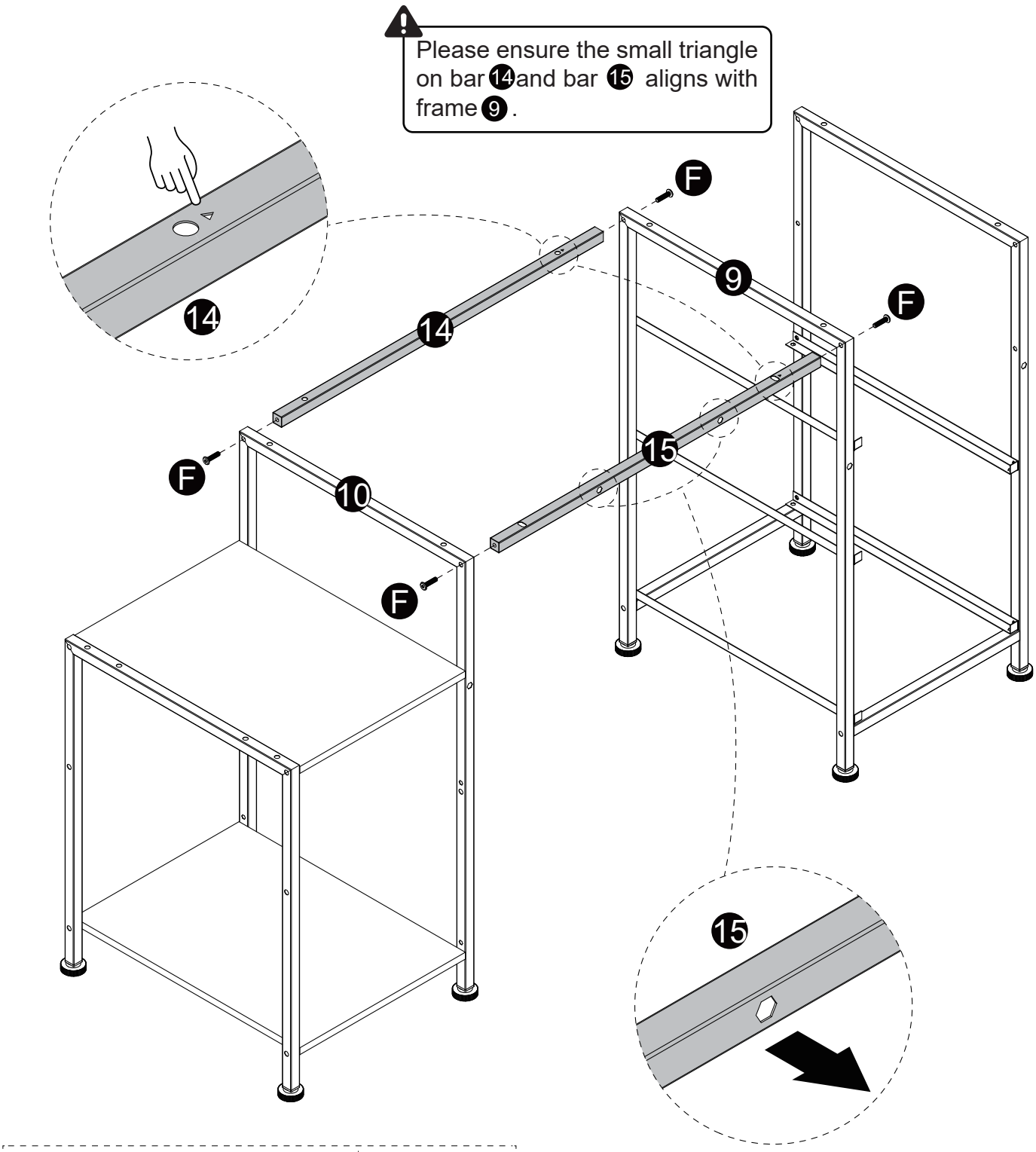

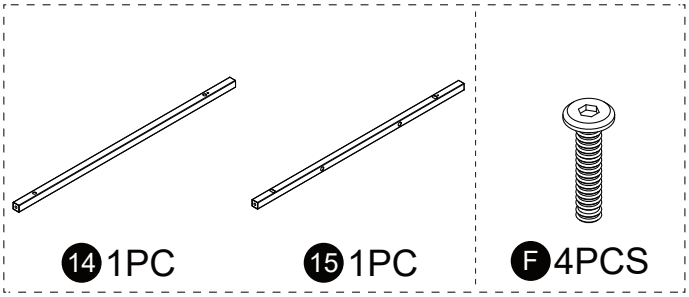

⚠ Possible problems during installation:

- There is a gap between the 2 boards.

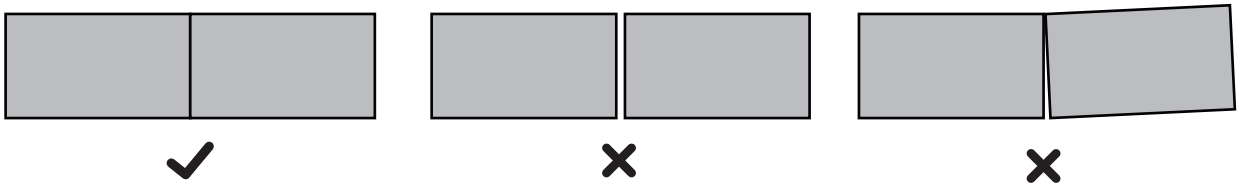

- The hole in the bar is not aligned with the hole in the board, and the screw can not be installed.

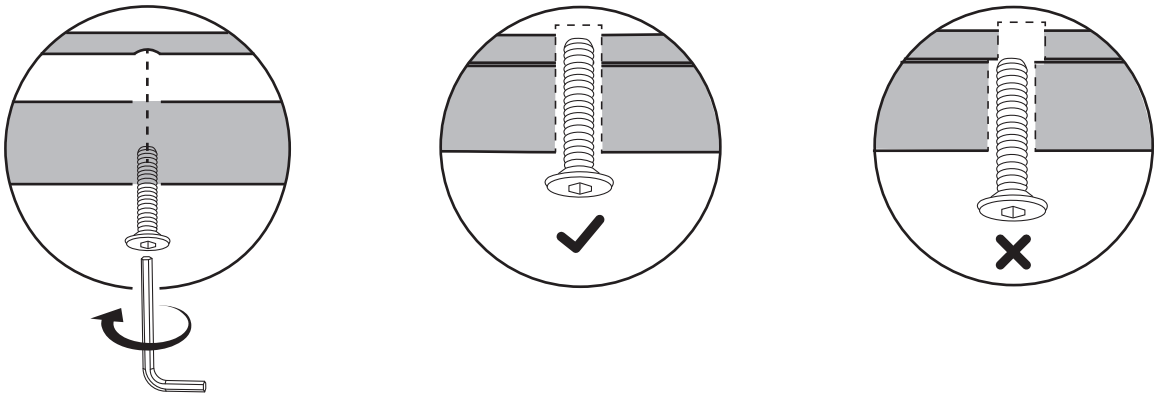

⚠ Recommended solution:

- Please loosen the screws which fix the boards, adjust the boards to make them fit together without gaps, then tighten the screws. Since the diameter of the screw hole in the bar is larger than the hole in the bolt, the position of the board can be adjusted.

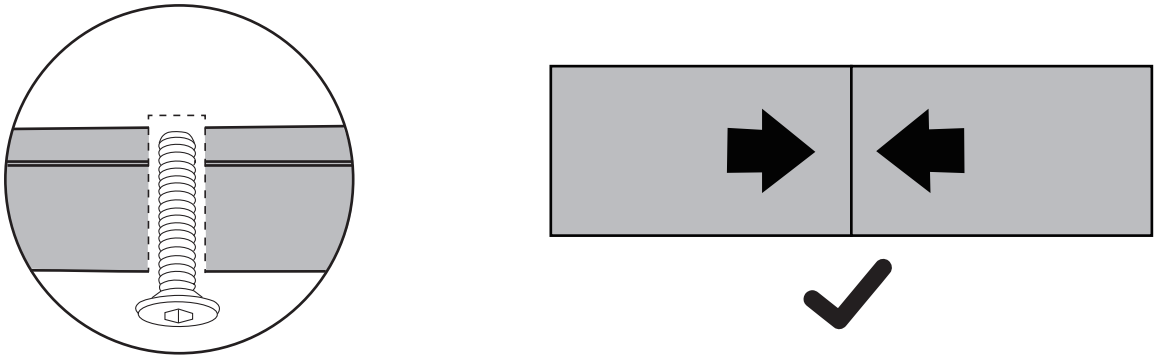

- If the above method doesn't work, please contact us with a photo of the holes, we will help you further.

Assembly Instructions

Step5:

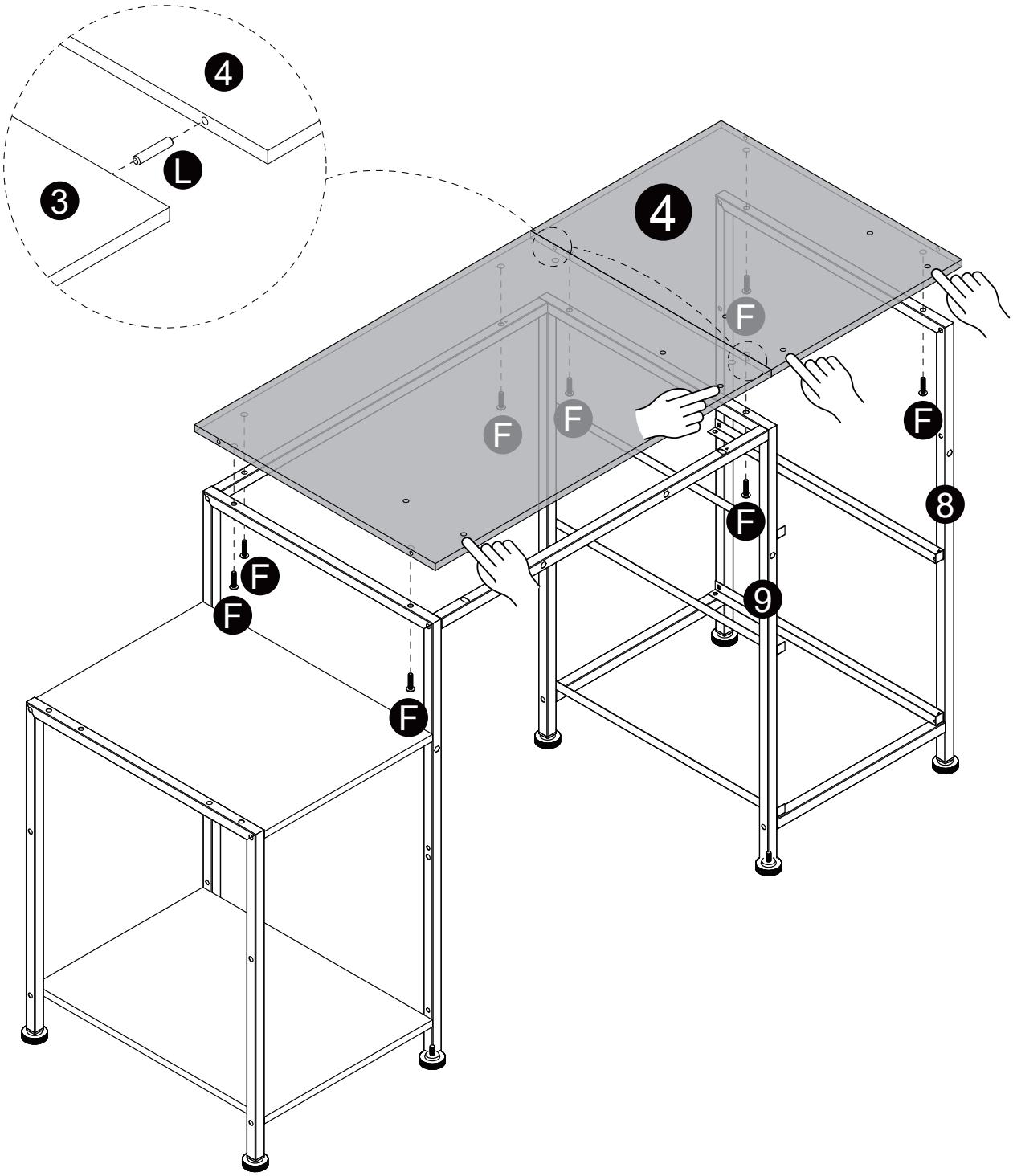

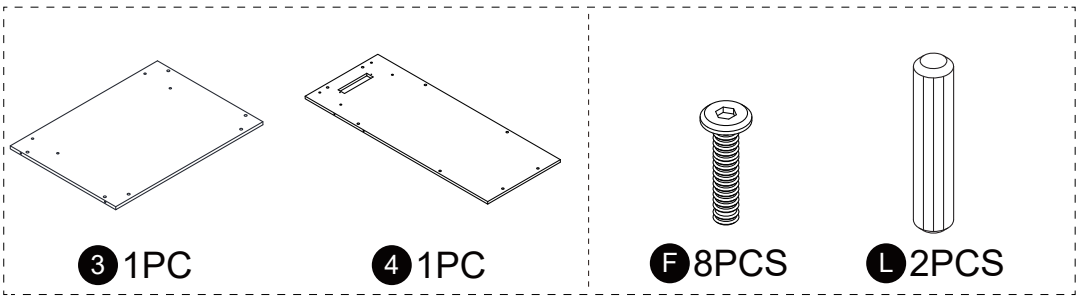

Assembly Instructions

Step6:

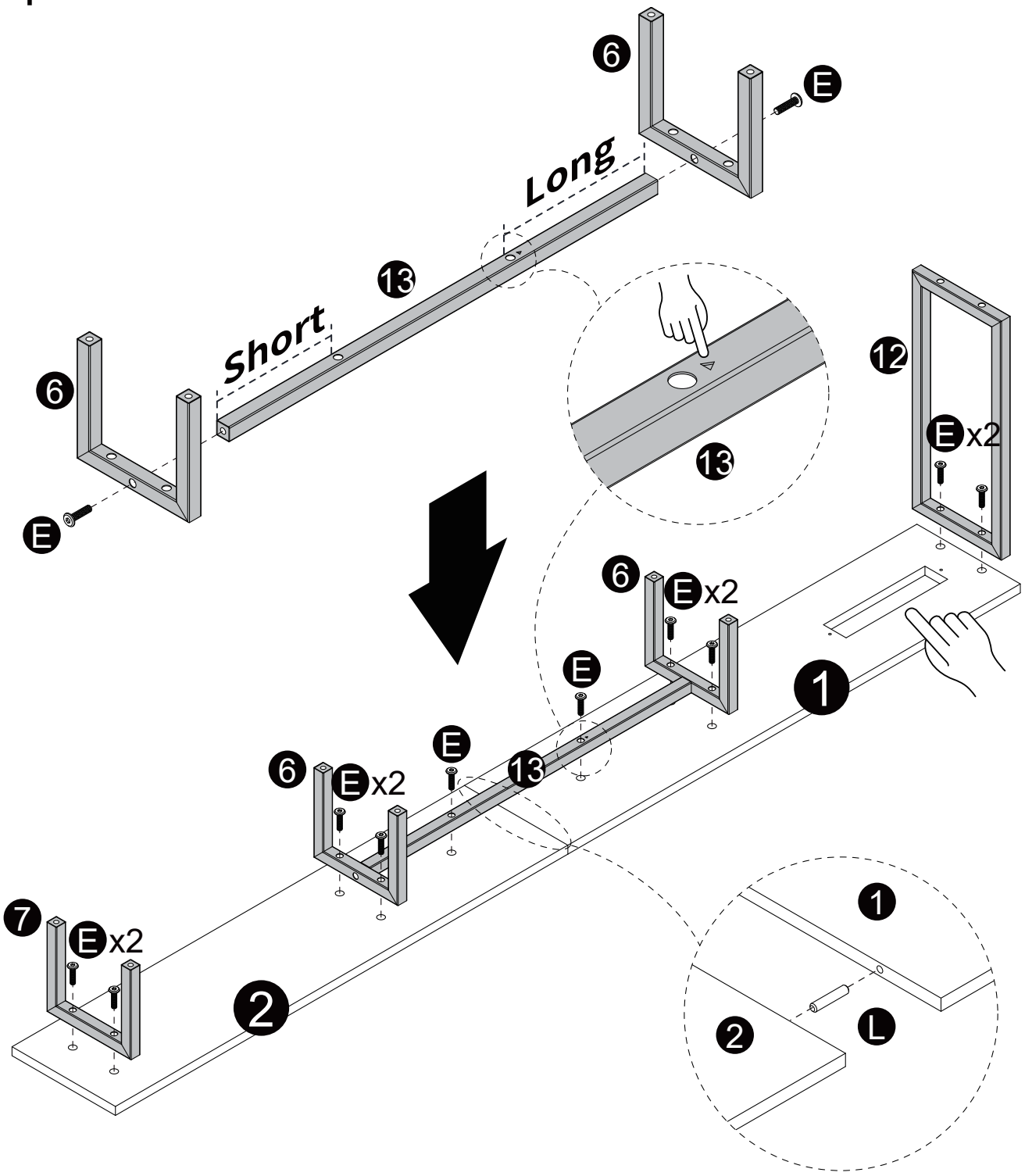

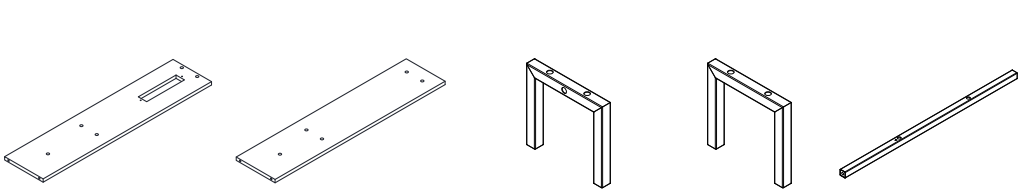

1 1PC | 2 1PC | 6 2PCS | 7 1PC | 13 1PC

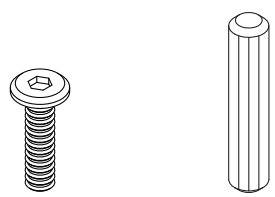

E 12PCS | L 2PCS

Assembly Instructions

Step7:

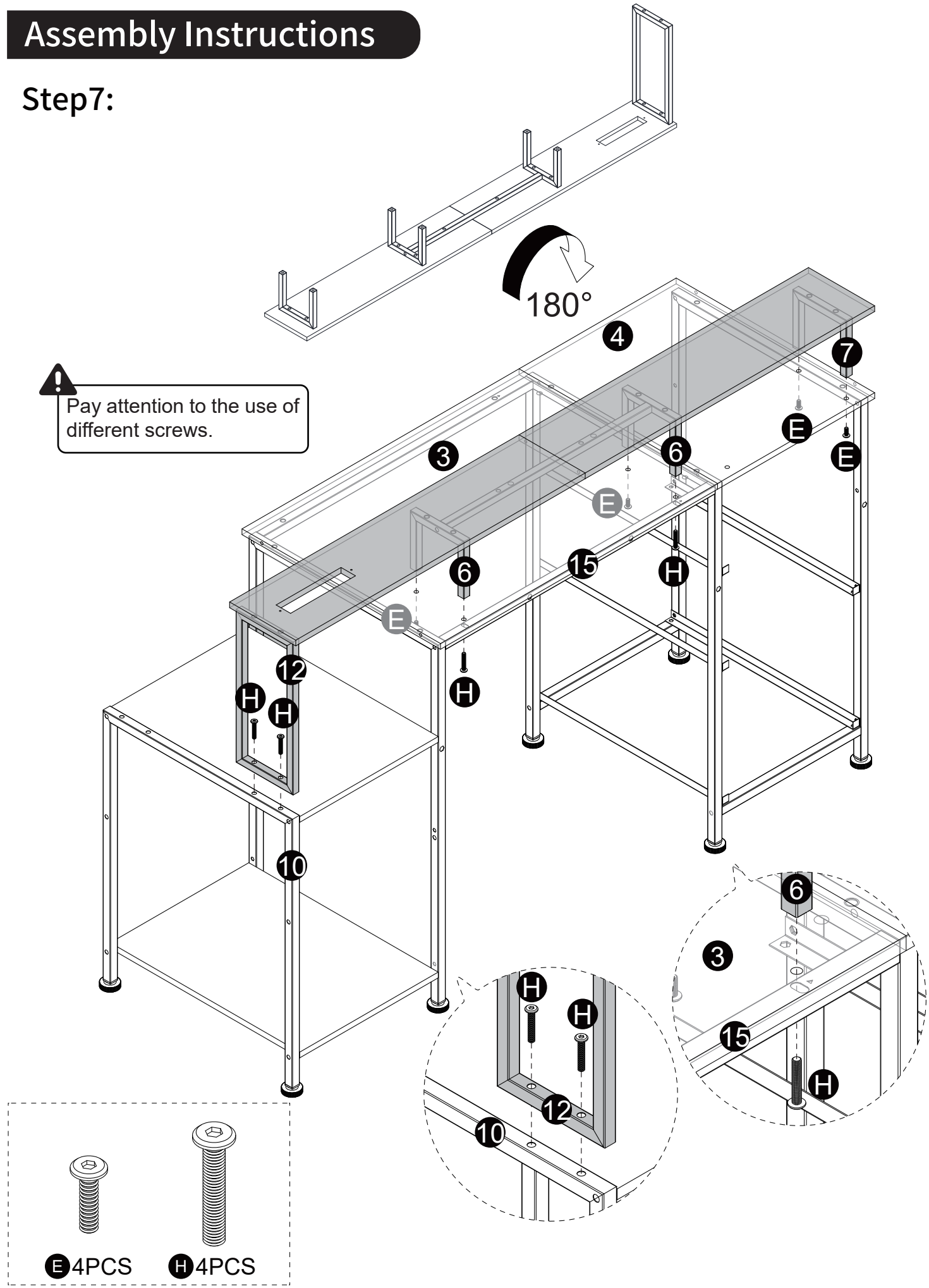

Assembly Instructions

Step8:

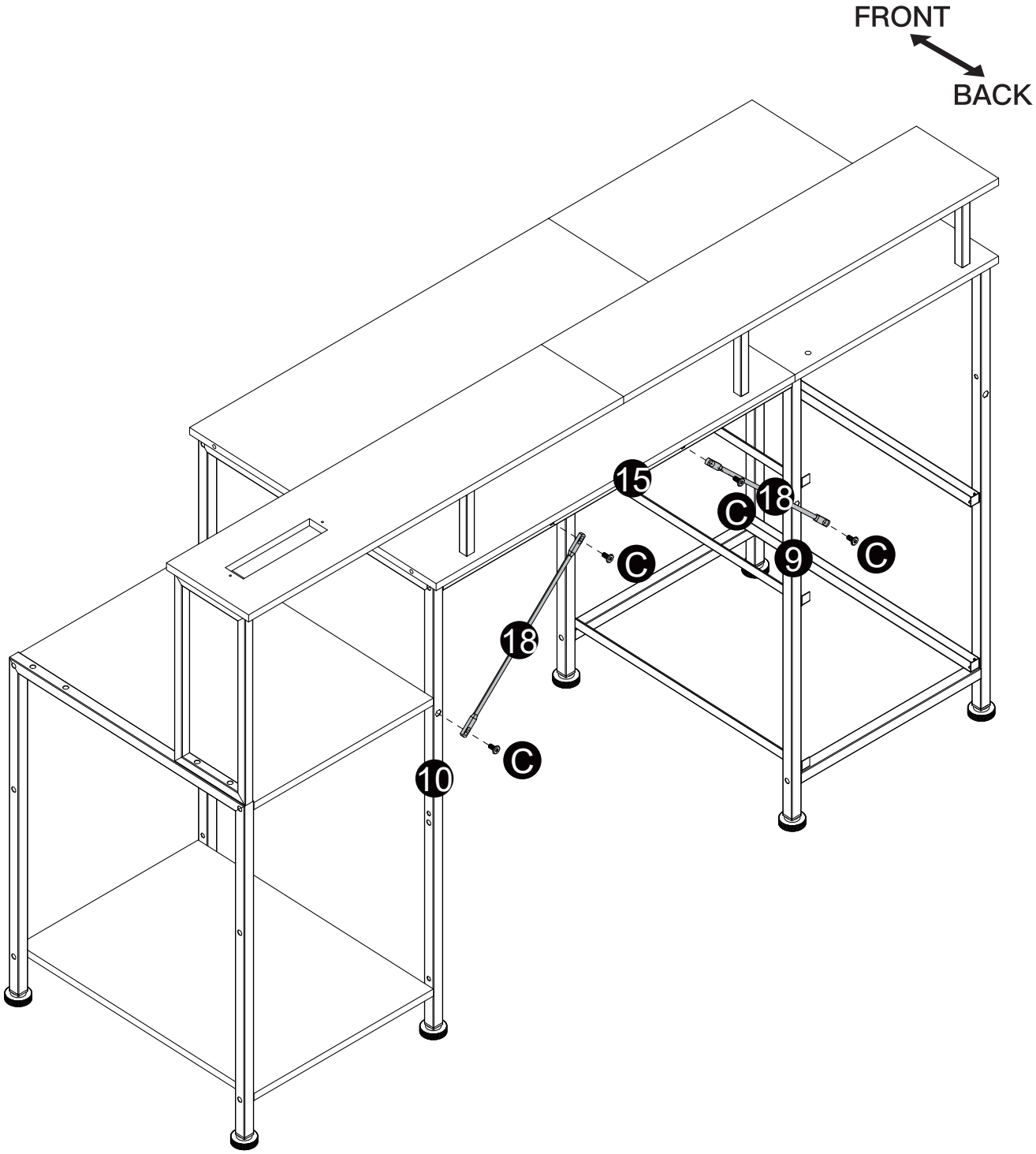

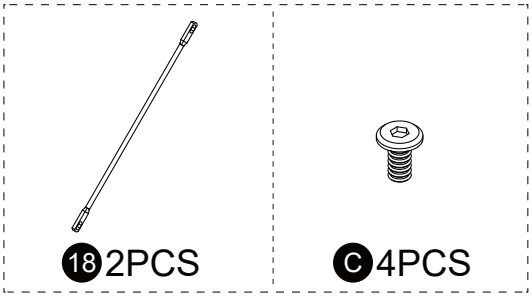

Assembly Instructions

Step9:

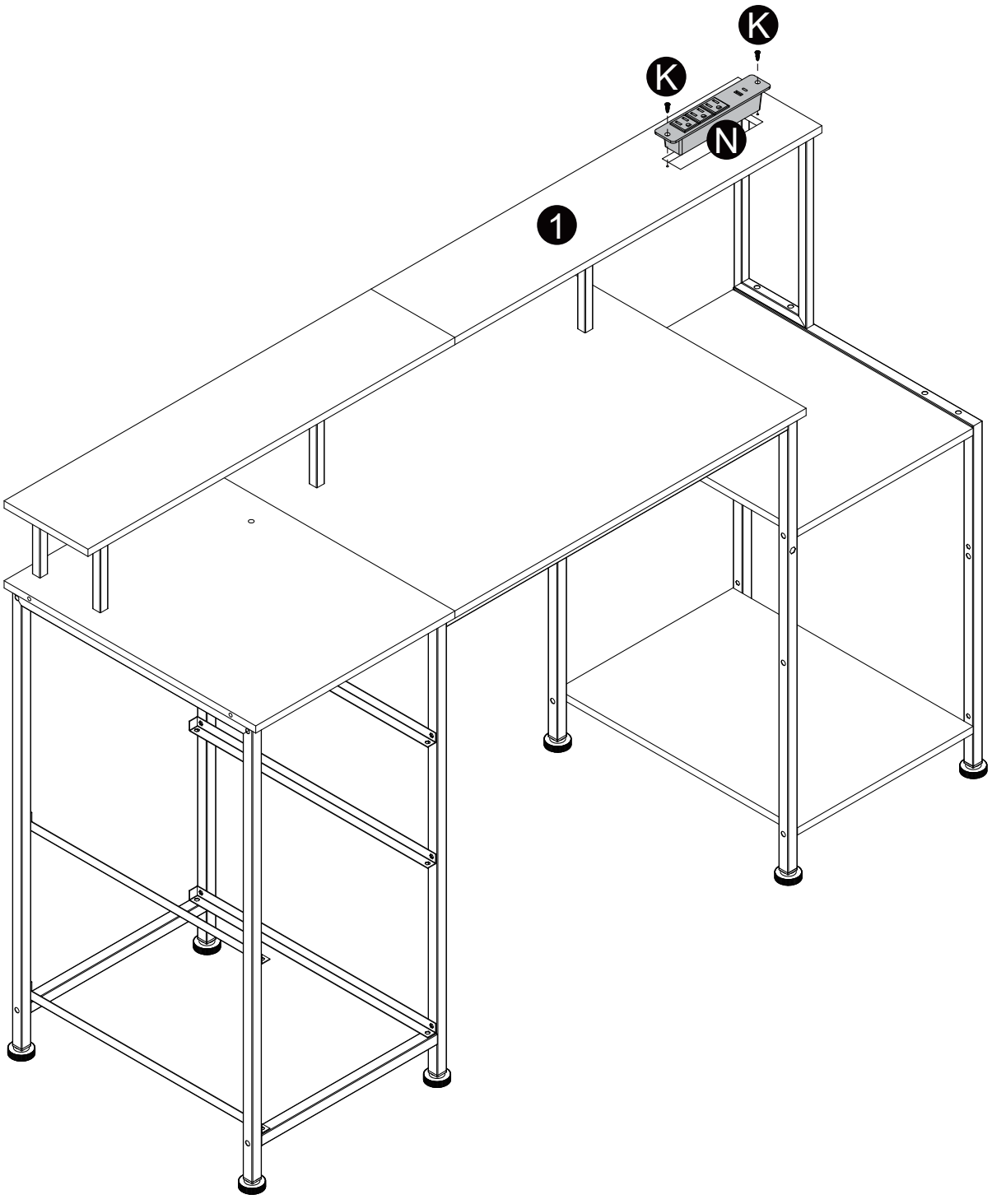

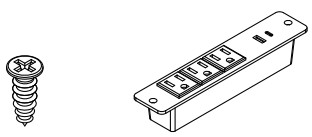

K 2PCS N 1PC

Assembly Instructions

Step10:

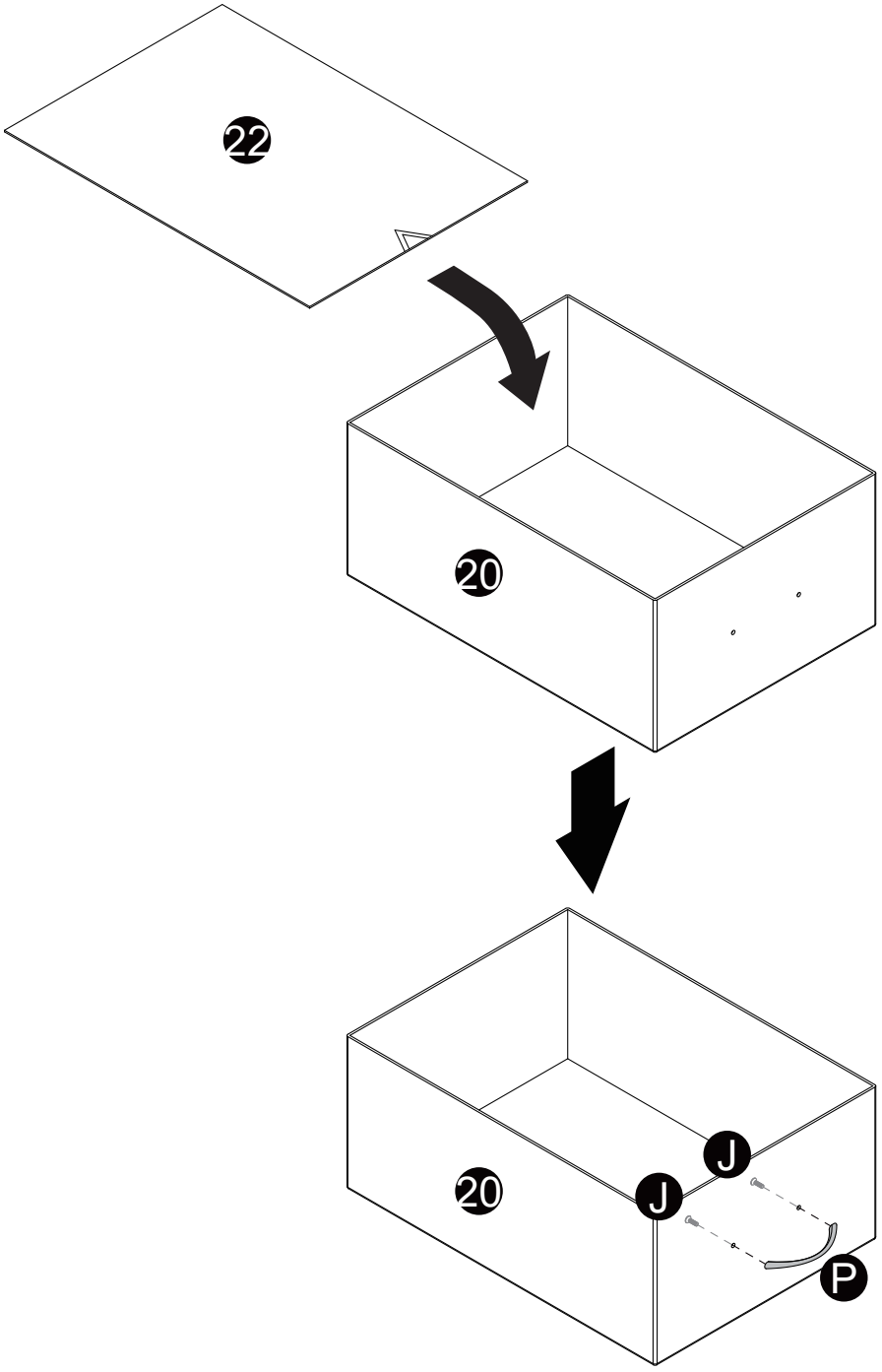

x2

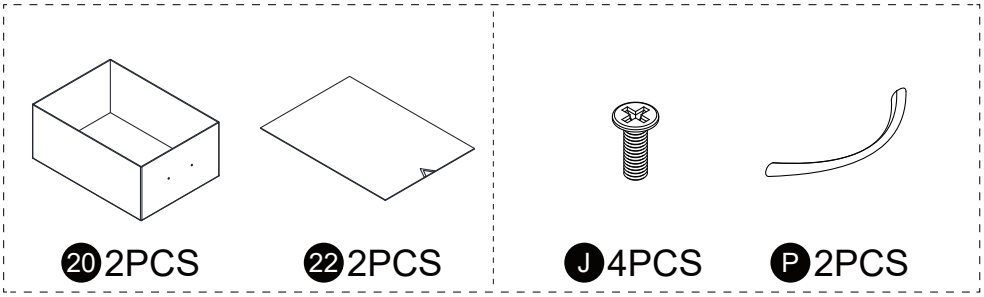

Assembly Instructions

Step11:

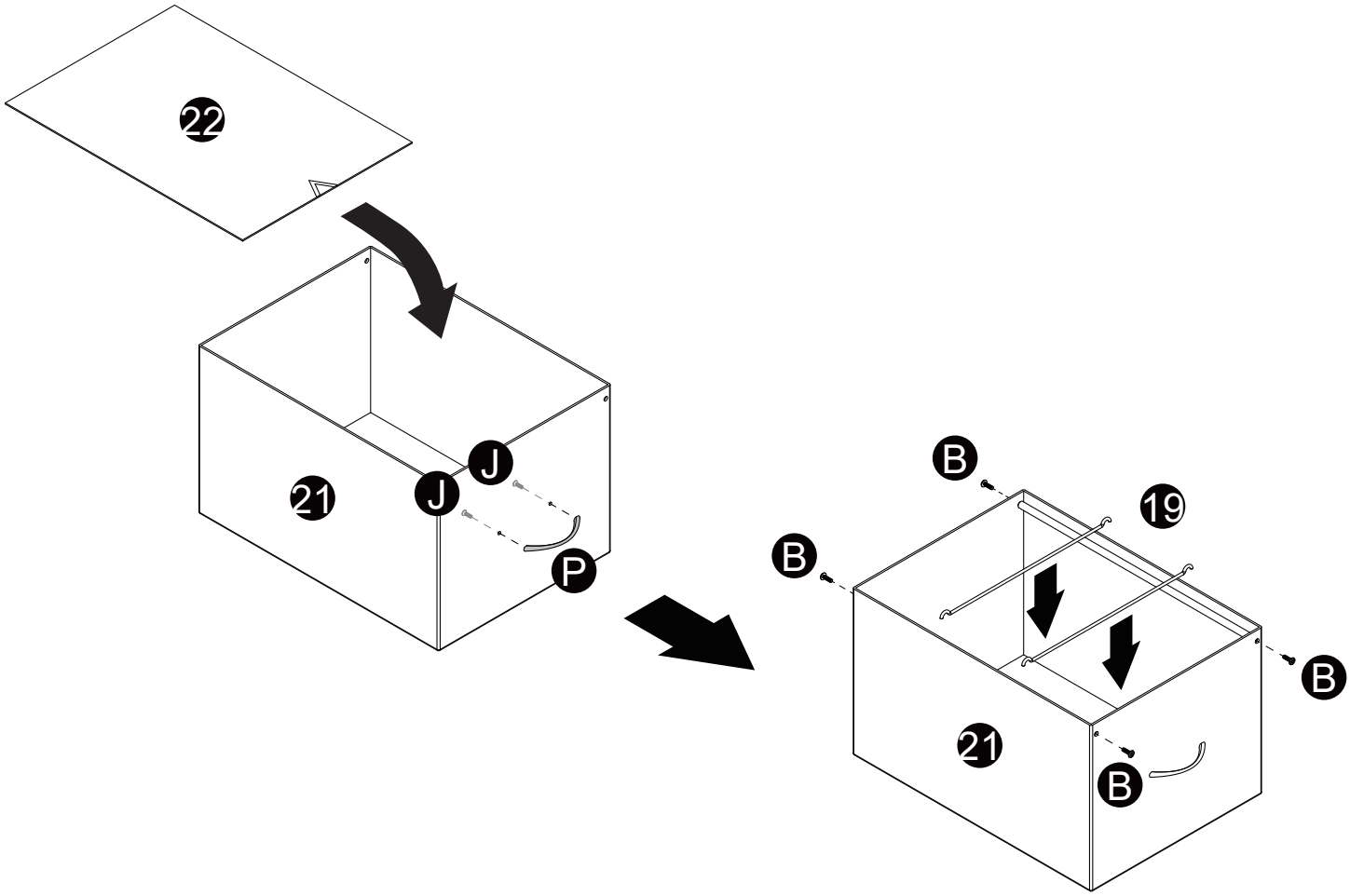

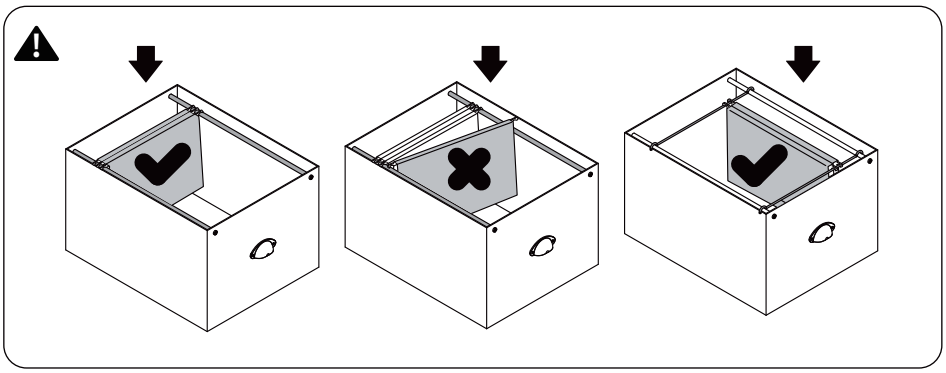

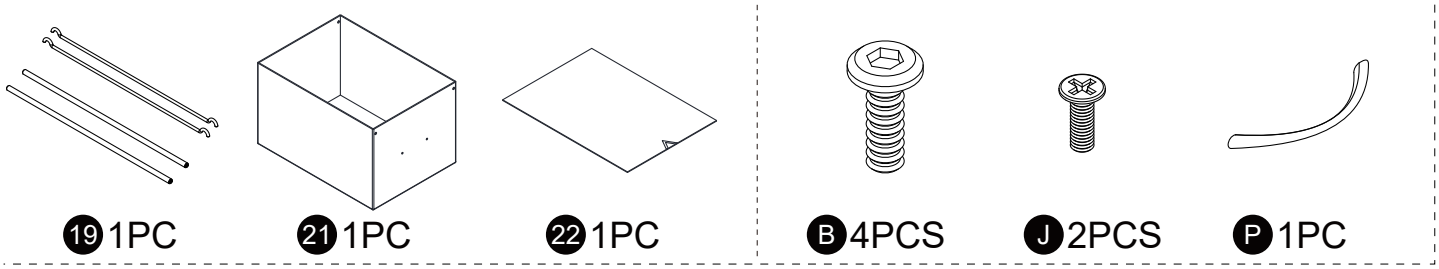

Assembly Instructions

Step12:

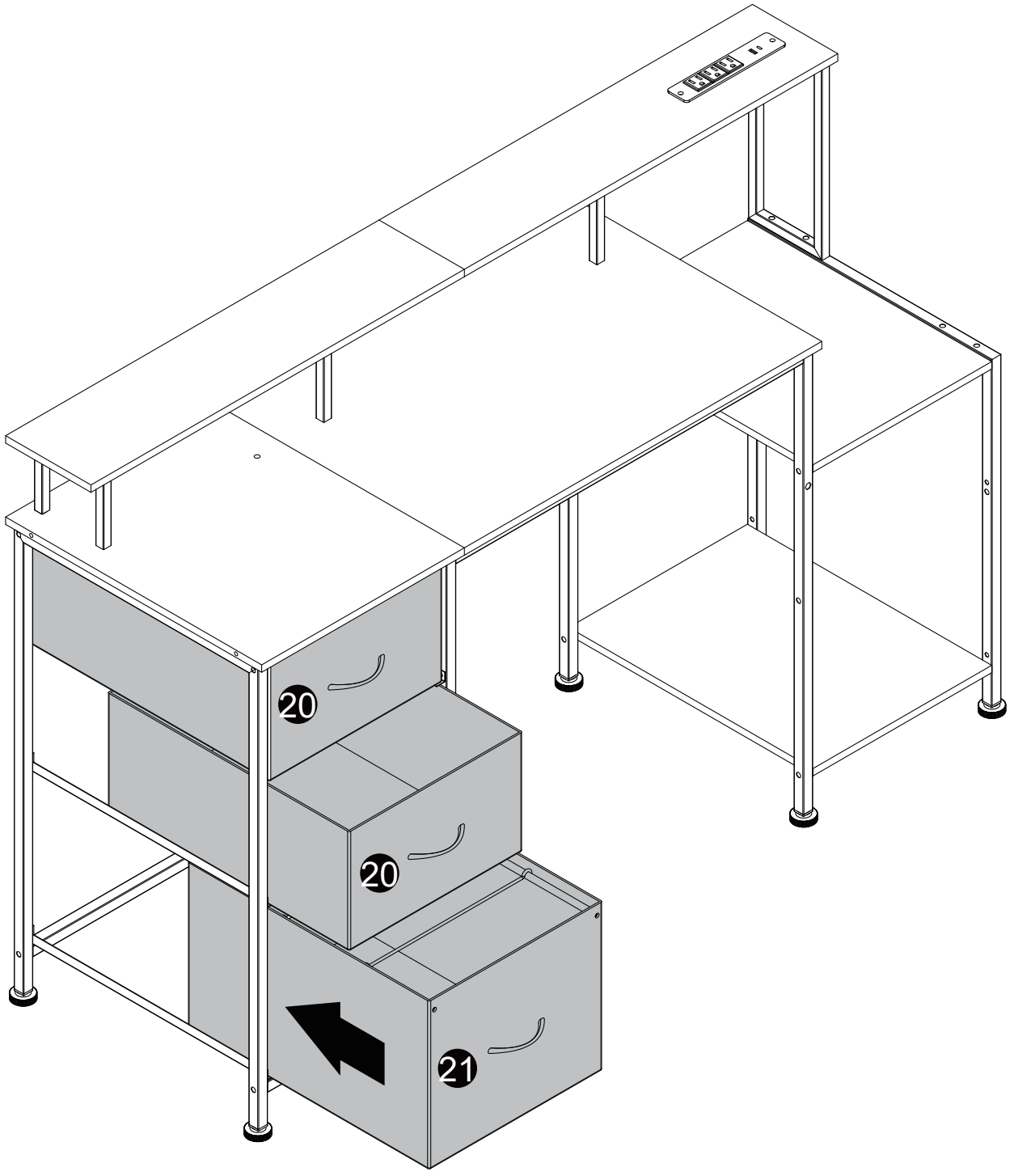

Assembly Instructions

Step13:

Note: The USB interface of the light strip should face the same direction as the socke.

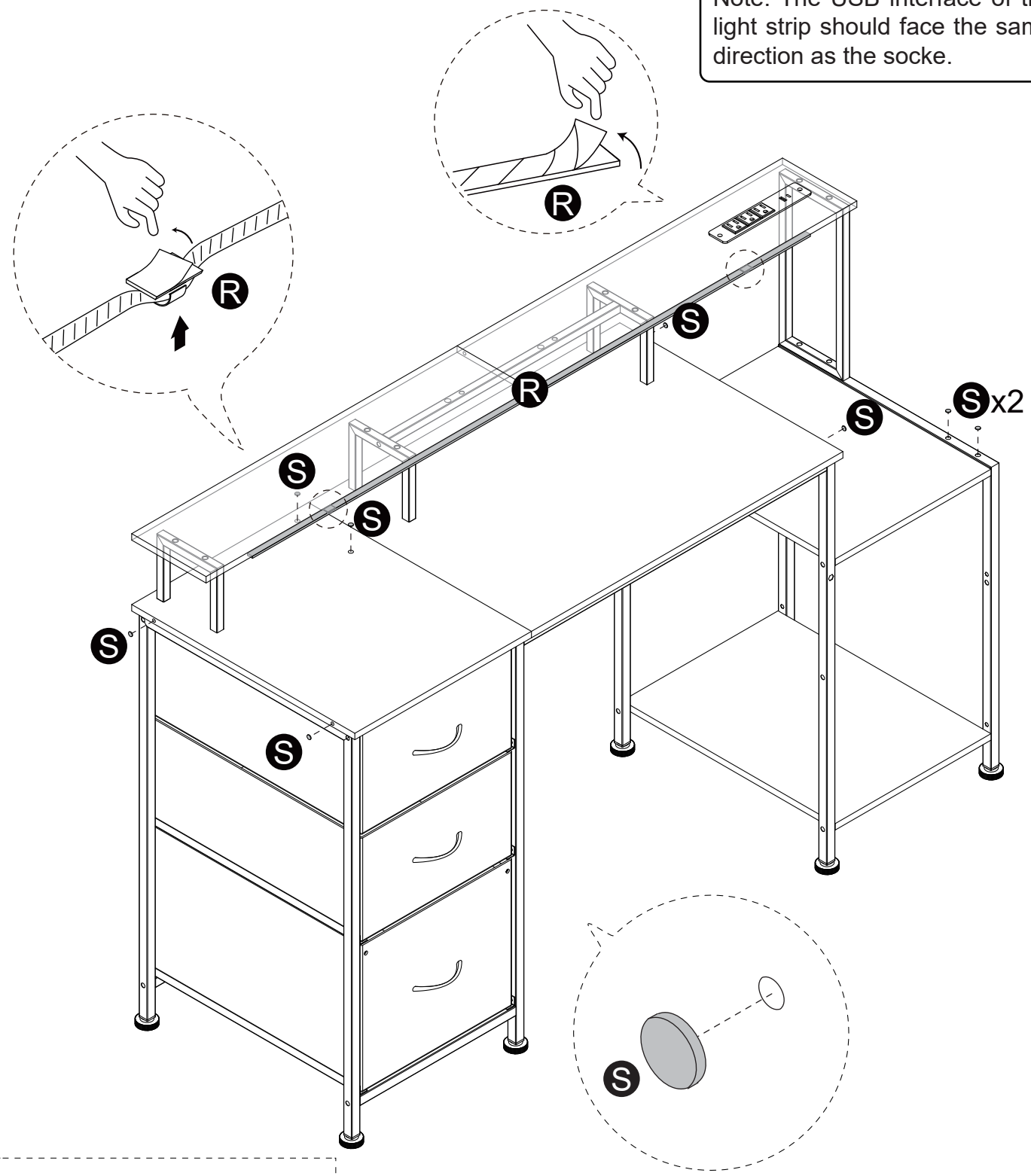

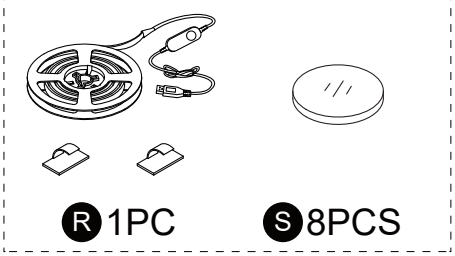

Some holes are not required for installation. If you do not want the holes to be exposed, you can stick on hole stickers.