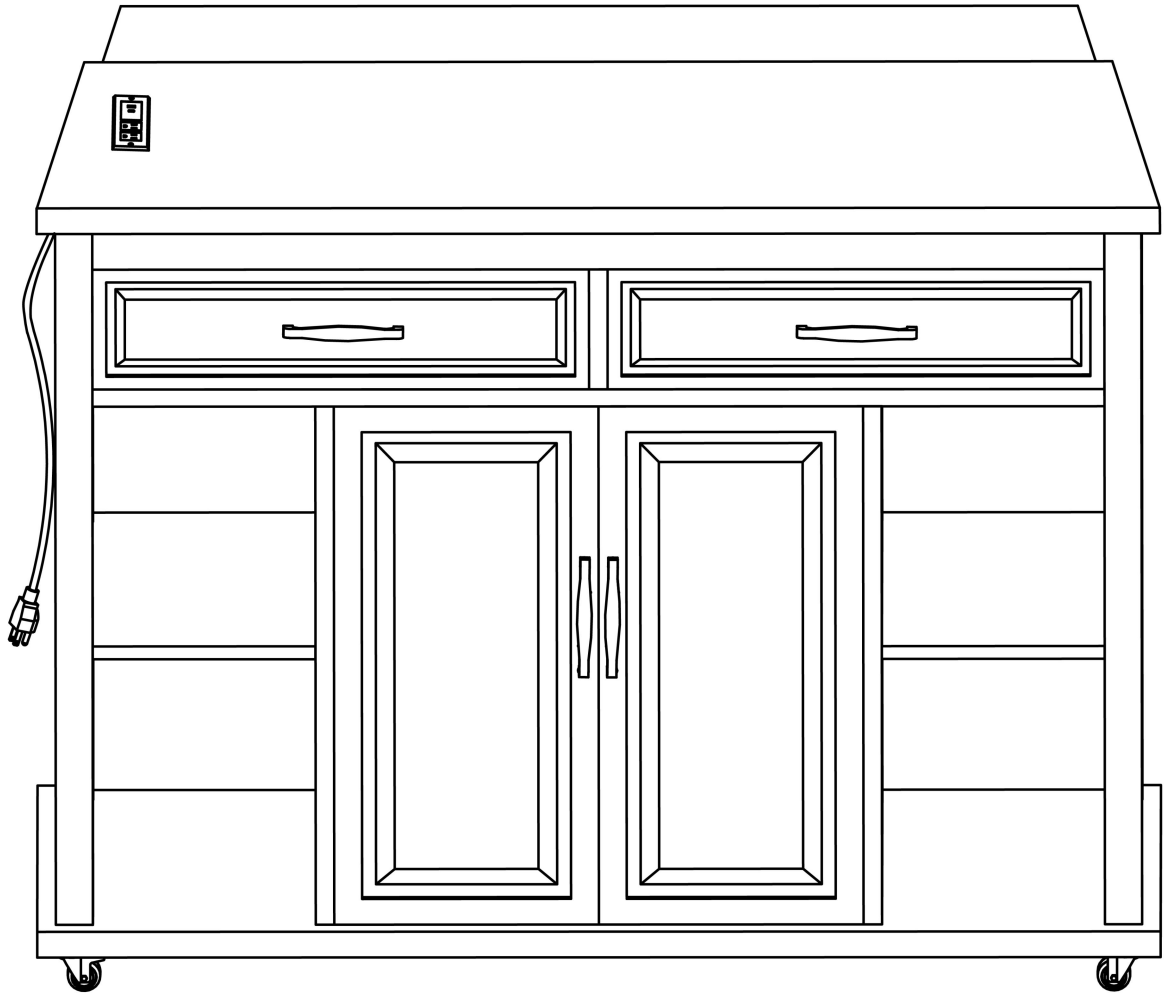
SKU :N707P215327



1. Thank you for choosing ***our products.***

2. Return Policy



DO NOT RETURN TO THE STORE! Skip the process of returning your product and contact us directly for a replacement

If you find that parts of your order are missing or damaged, we will gladly ship any needed replacement parts free of charge.

If your product's quality does not meet your expectations or you have found any sort of defect, please contact our customer service department and let us know the details of your order and any issues encountered, we will try our best to provide you with a solution. Feel free to also directly contact our manufacturer concerning needed replacement parts and they will be happy to help provide you with a solution or answer any questions you may have.

Recommendations Before Beginning Assembly

 • Read instructions, cover to cover

 • Have 2-4 adults on hand for assembly depending on product size

 • Do not assemble directly on flooring or carpet

 • Assemble on a clean non-marring surface (example: packing foam)

 • Save all packaging until finished

3. Assembly Notice:

- If you encounter any problems during assembly and find that you cannot continue, rest assured we will help you solve the situation as soon as possible. Simply keep all of the parts of the product stored in a safe place and contact us immediately so we may assist you further.
- Once you have opened your package, remove all inner hardware packages and take the parts out. One by one, Place the parts out neatly in front of you, then refer to the instructions to ensure no parts are missing. If any pieces are found missing, please carefully look in the box first, as the hardware packaging might have torn making the hardware spill in the box.

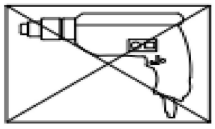
- Some key parts of your product may be stored and hidden inside of other parts. Please open any zippered or hook & loop storage compartments to remove all parts. (example: cushions and legs being stored in the underside of a sofa)
- IMPORTANT: When setting up your product, DO NOT INSTALL THE SCREWS ALL THE WAY IN THE BEGINNING. Place each screw into their proper hole and use your hand to twist the screw halfway. Twist all the screws in halfway to ensure the holes will match up properly and the product is level on the ground. When everything seems fitted, then tighten the screws.
- When you have completed assembly, we suggest you have more than one person to assist you with lifting and placing the product.

Care & Maintenance

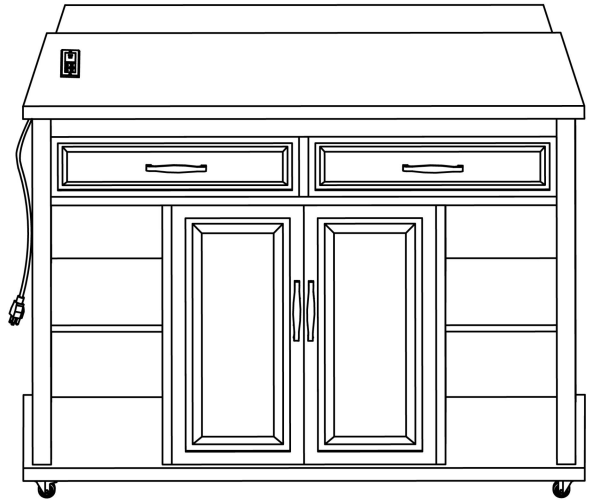
- Do not put hot items directly on furniture surface
- Do not clean furniture with harsh cleansers or polish
- Do not place furniture under direct sunlight
- Do not place furniture near heating or cooling vents
- Do not write on furniture without a padded barrier to protect the surface
- Do not place furniture outside. For indoor use only
- Not for commercial use. For residential use only
- Stains may be removed with mild soap solution and damp cloth
- Children should not climb or jump on the furniture
- Dust and pick-up spills using a clean, non-colored, lint-free cloth

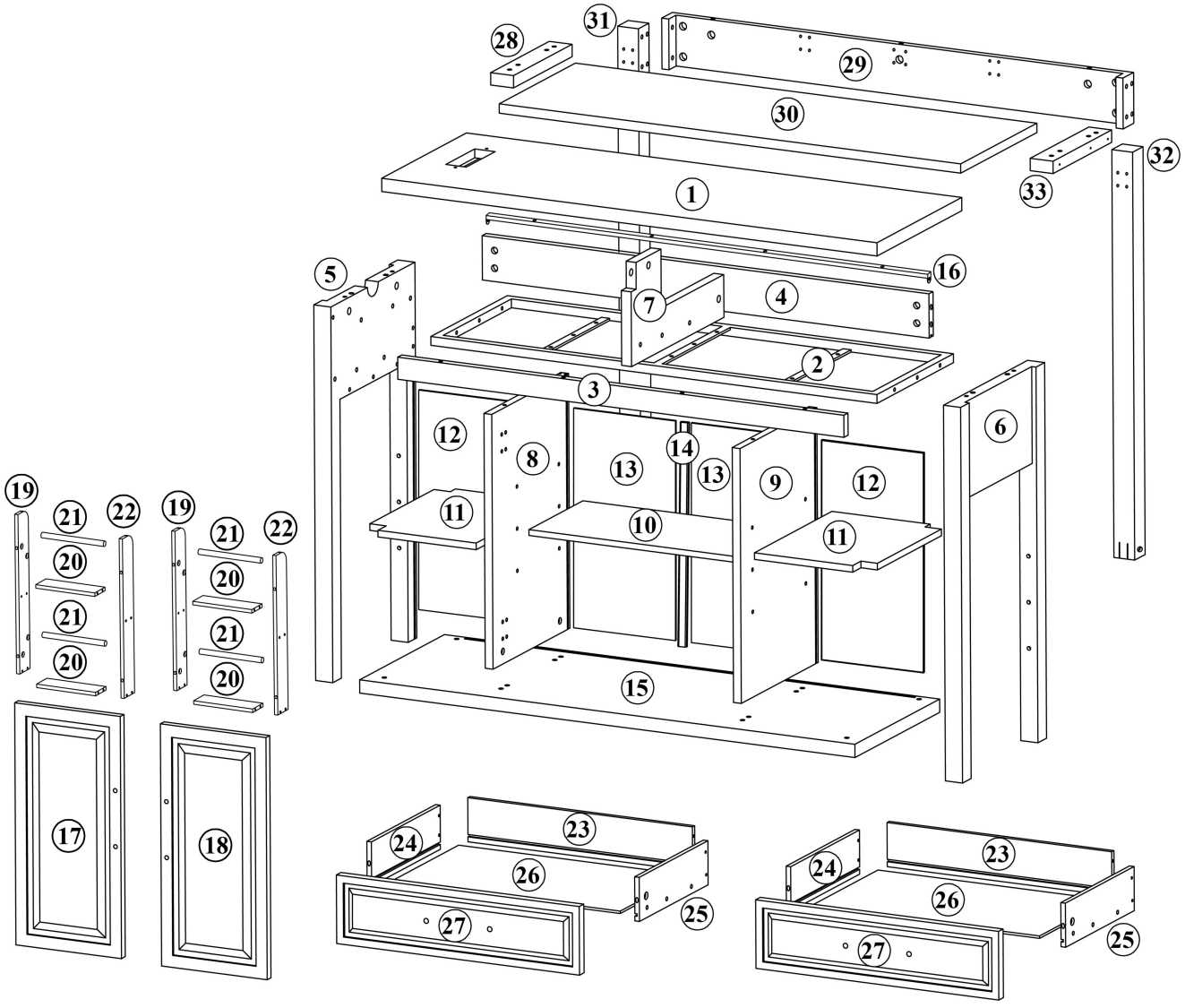
Caution

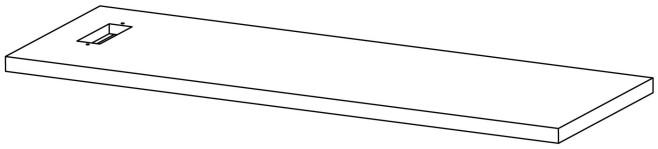
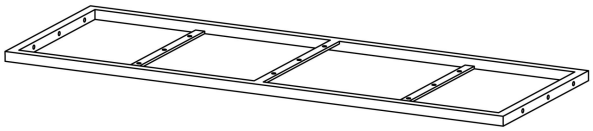
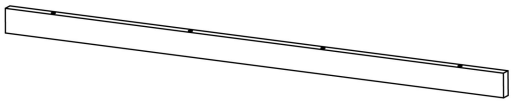
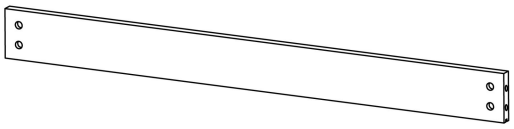
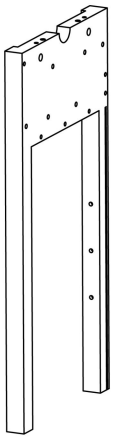
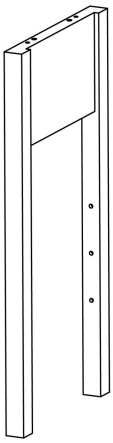
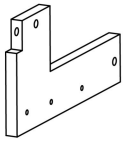
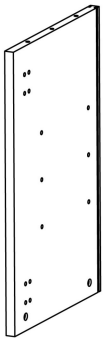
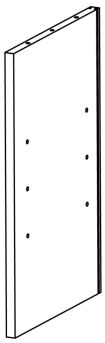
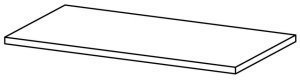
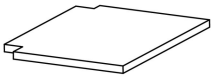
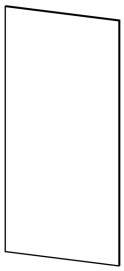
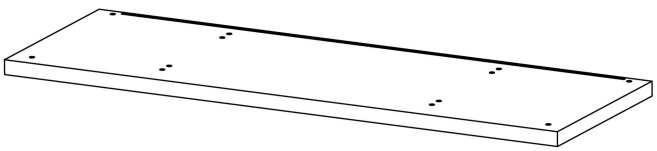
- This product contains small components. Please ensure that they are kept away from small children.
- Do not use power tools to assemble your furniture. Power tools may strip or damage the parts.

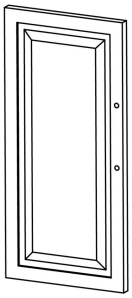
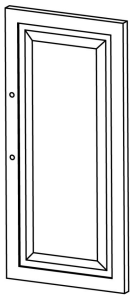
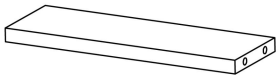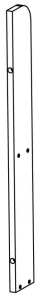
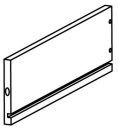
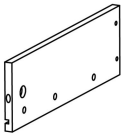
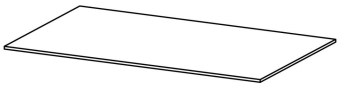
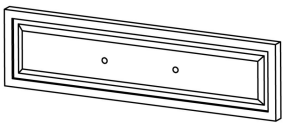
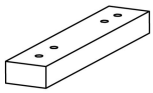
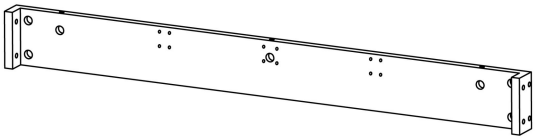
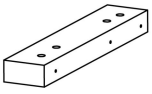


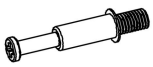
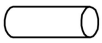
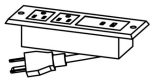
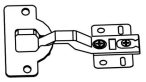
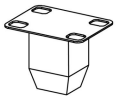
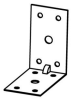
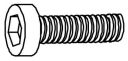
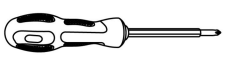
SKU :N707P215327



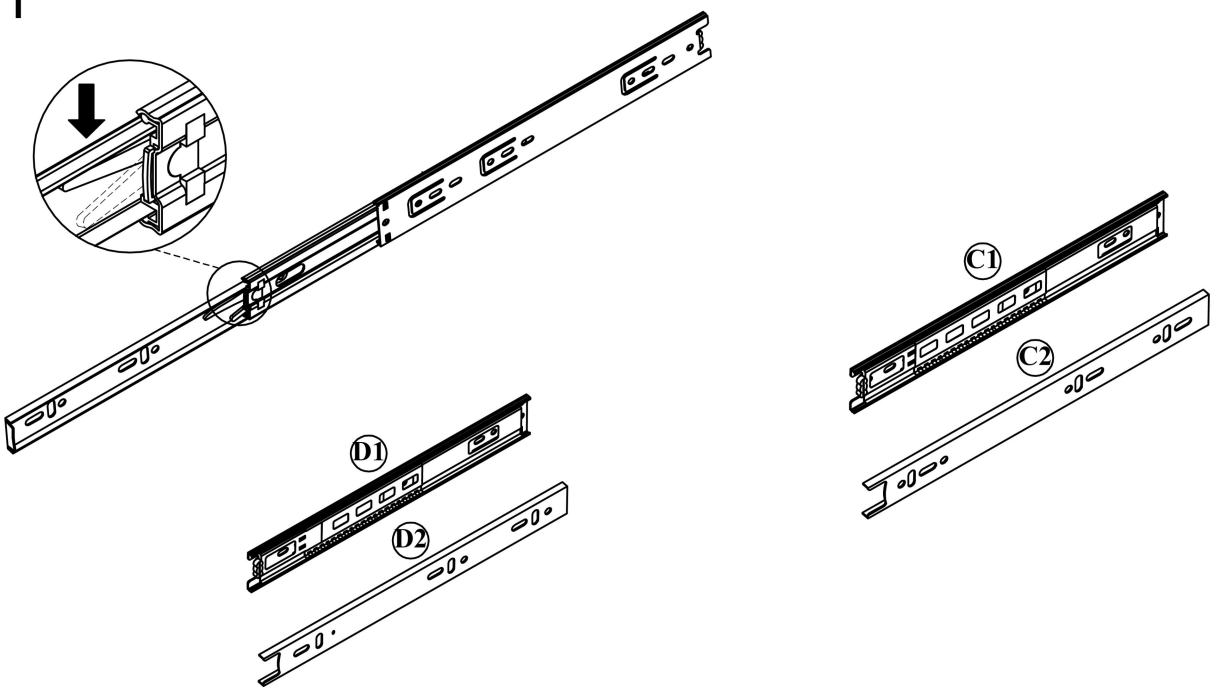


①  x1	②  x1
③  x1	④  x1
⑤  x1	⑥  x1
⑦  x1	⑧  x1
⑨  x1	⑩  x1
⑪  x2	⑫  x2
⑬  x2	⑭  x1
⑮  x1	

⑯  x1	⑰  x1	⑱  x1	
⑲  x2	⑳  x4	㉑  x4	㉒  x2
㉓  x2	㉔  x2	㉕  x2	㉖  x2
㉗  x2	㉘  x1	㉙  x1	
㉚  x1	㉛  x1	㉜  x1	㉝  x1

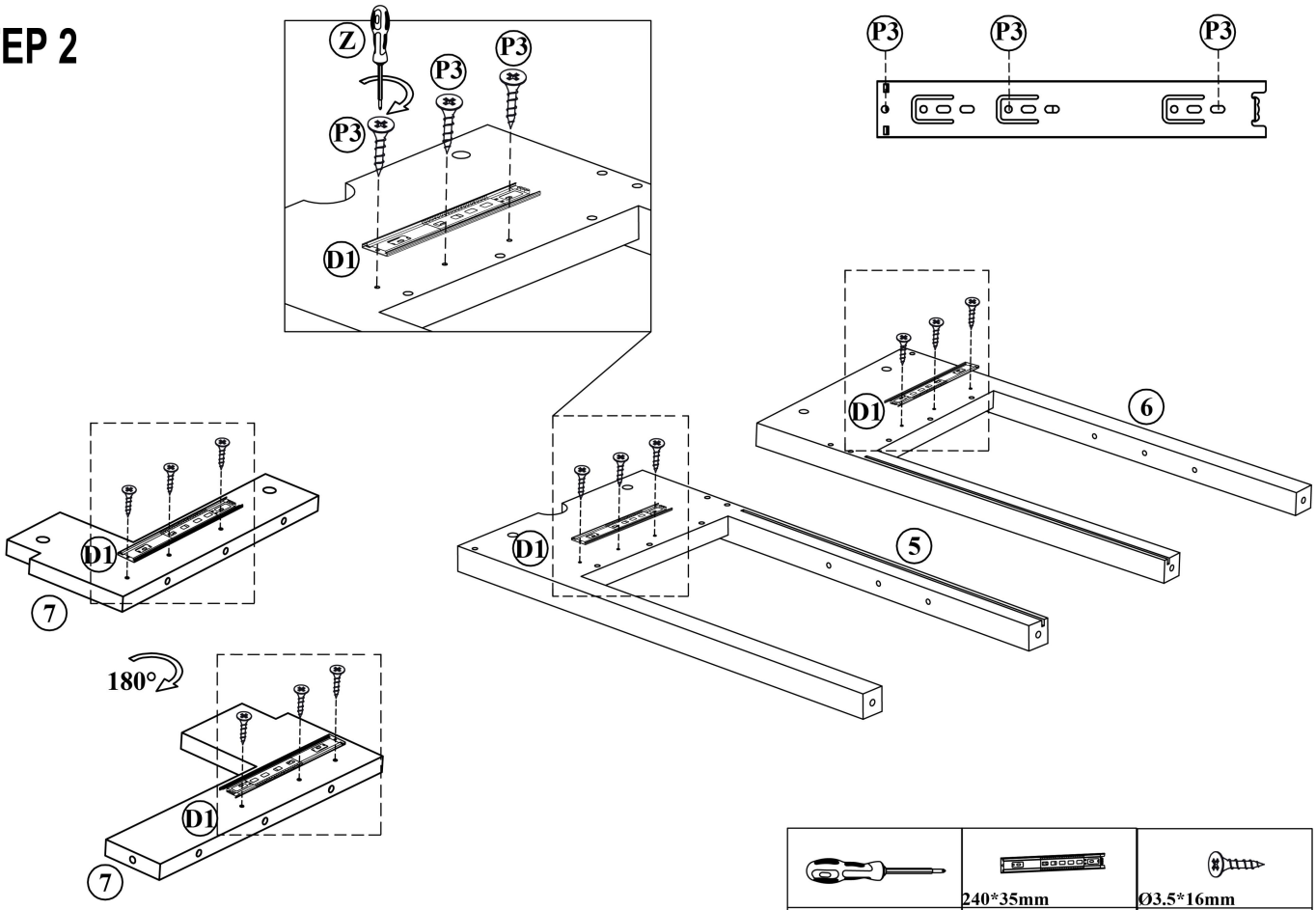
 Ø6*35mm	 Ø15*9mm	 300*45mm	 240*35mm	 Ø8*20mm
Ax39	Bx39	Cx2	Dx4	Ex12
				
Fx1	Gx4	Hx12	Ix4	Jx2
			 65*65*38mm	
Kx4	Lx6	Mx2	Nx5	Ox12
 Ø3*10mm	 Ø3*14mm	 Ø3.5*16mm	 Ø4*12mm	 Ø4*25mm
P1x12	P2x12	P3x94	P4x2	P5x33
 Ø4*35mm	 Ø4*25mm	 Ø6*15mm	 Ø4*50mm	 Ø6*30mm
P6x6	Qx8	Rx24	Sx2	Tx8
 Ø6*35mm	 Ø14*1mm		 Ø4*60mm	 Ø5*20mm
Ux4	Vx14	Wx2	Xx1	Yx4
				
Zx1				

STEP 1



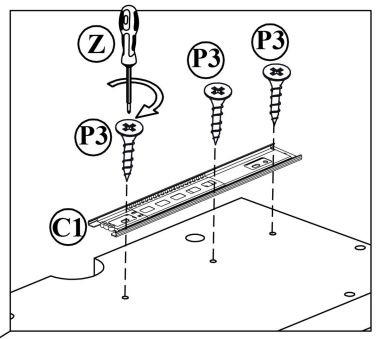
240*35mm	300*45mm
D x4	C x2

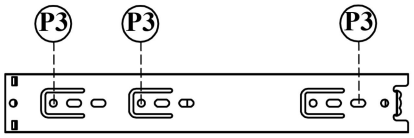
STEP 2

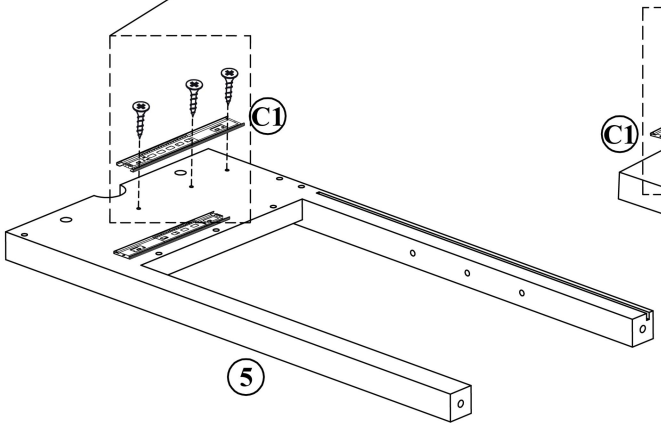


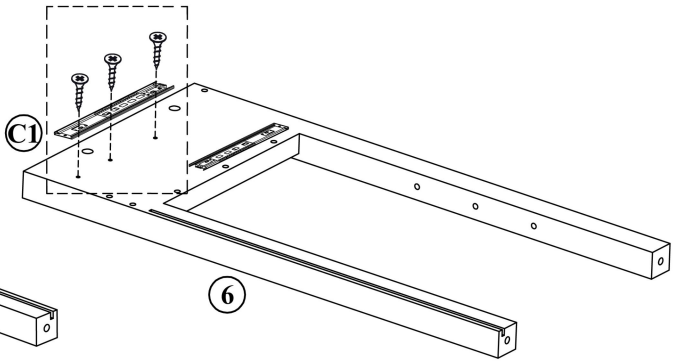
	240*35mm	Ø3.5*16mm
Z x1	D1 x4	P3 x12

STEP 3



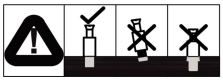


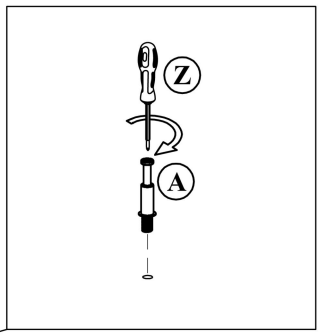


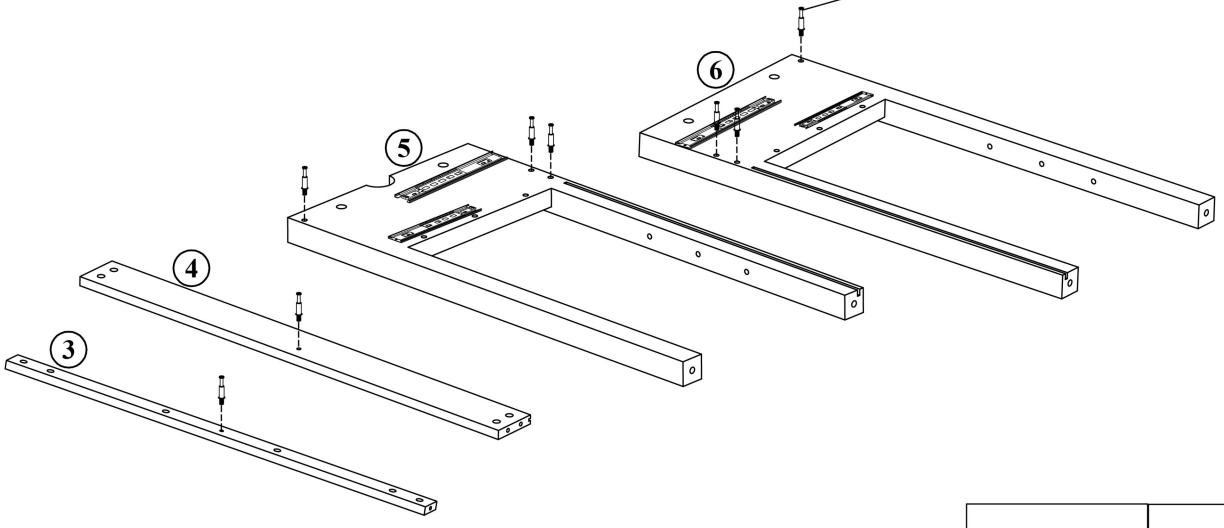


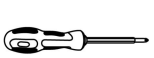
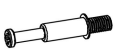
	 300*45mm	 Ø3.5*16mm
Z x1	C1 x2	P3 x6

STEP 4

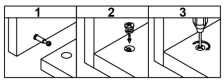


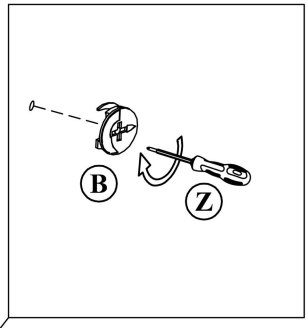


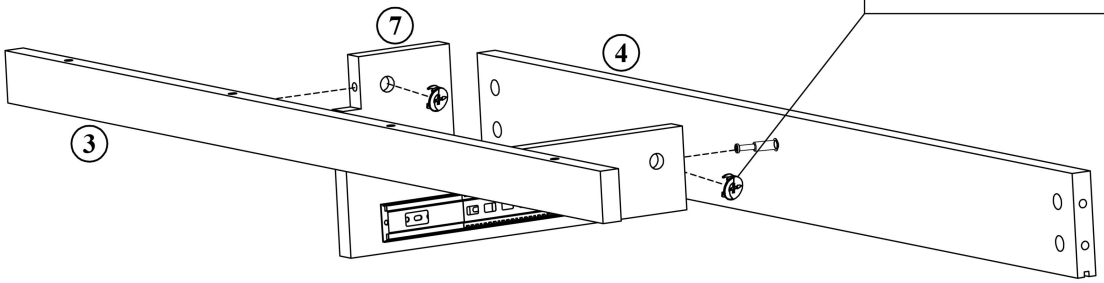


	 Ø6*35mm
Z x1	A x8

STEP 5

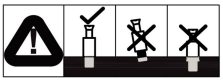


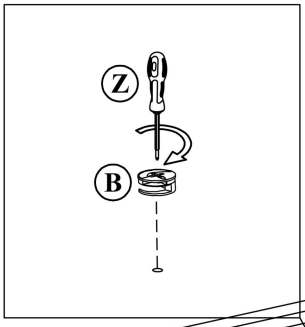


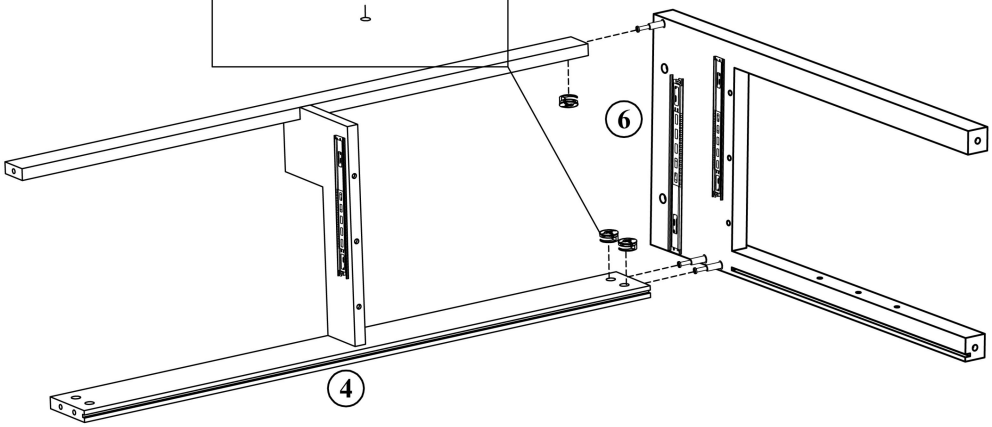


	 Ø15*9mm
Z x1	B x2

STEP 6

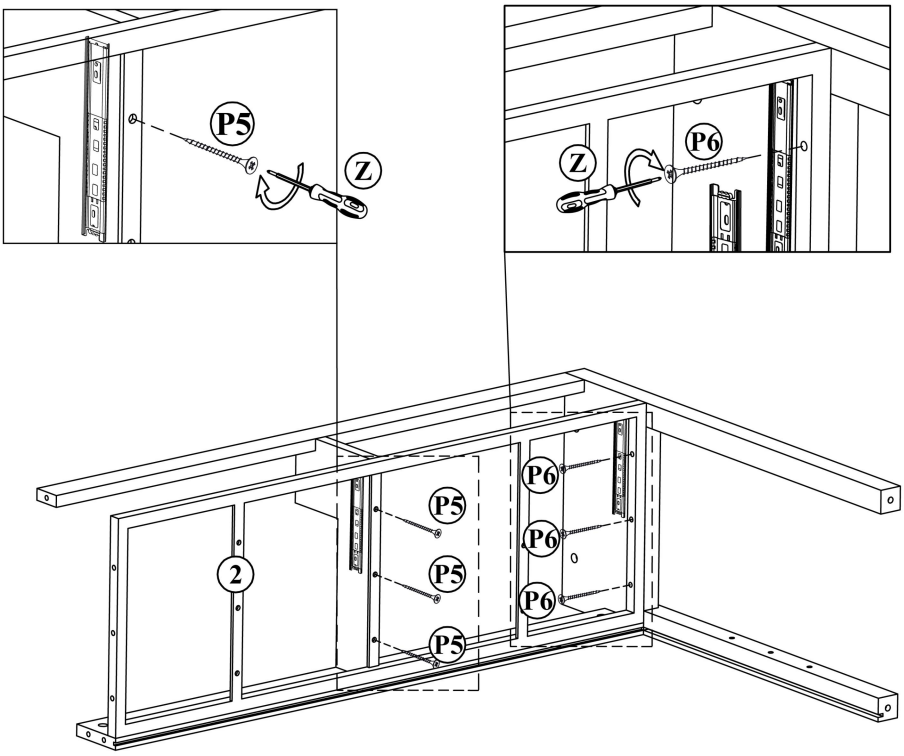


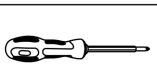




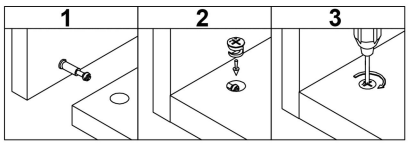
	 Ø15*9mm
Z x1	B x3

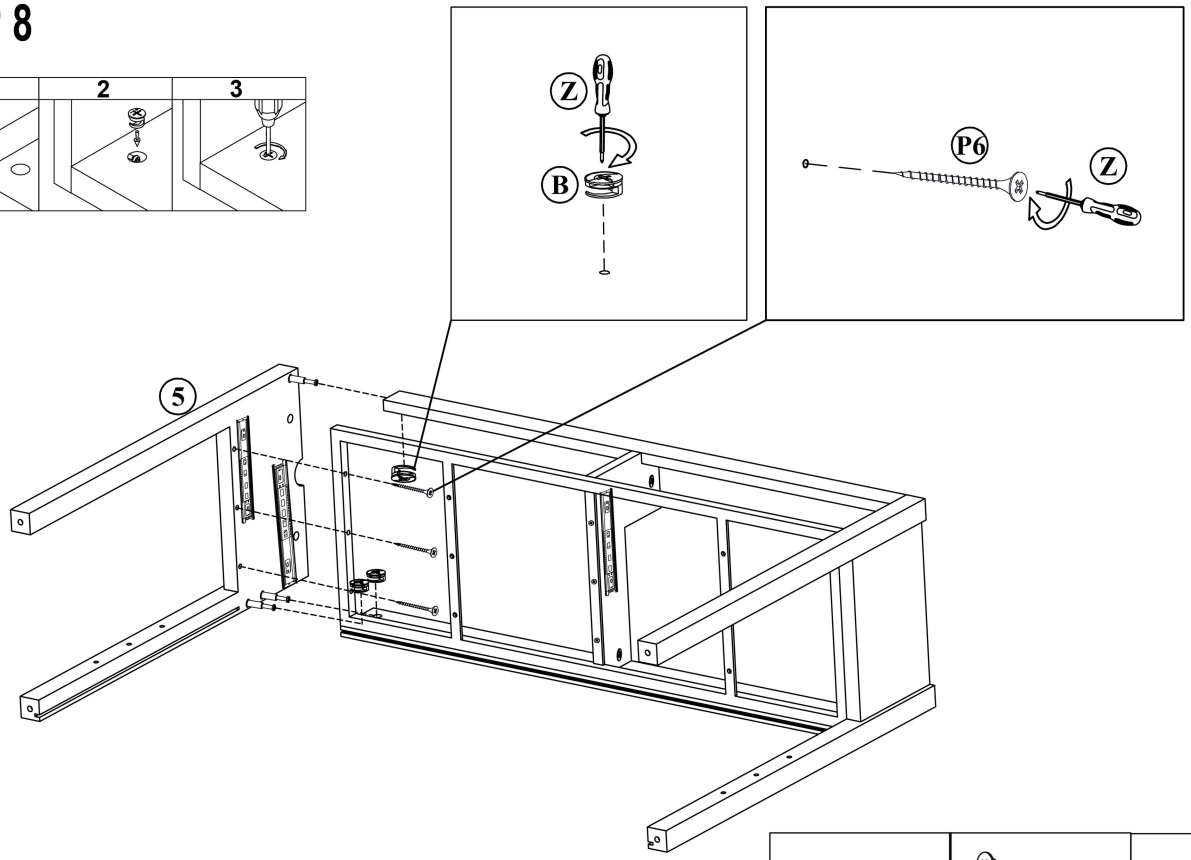
STEP 7

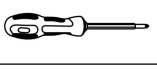


	 Ø4*25mm	 Ø4*35mm
Z x1	P5 x3	P6 x3

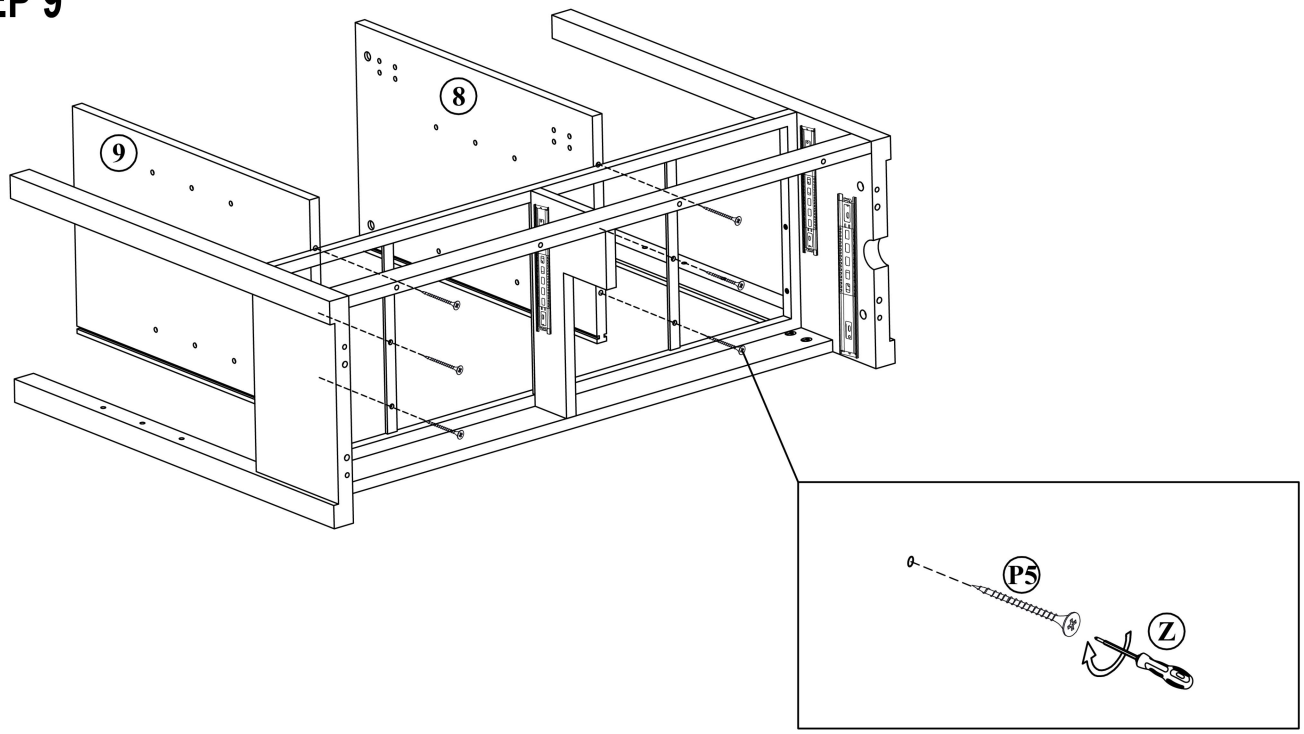
STEP 8

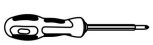




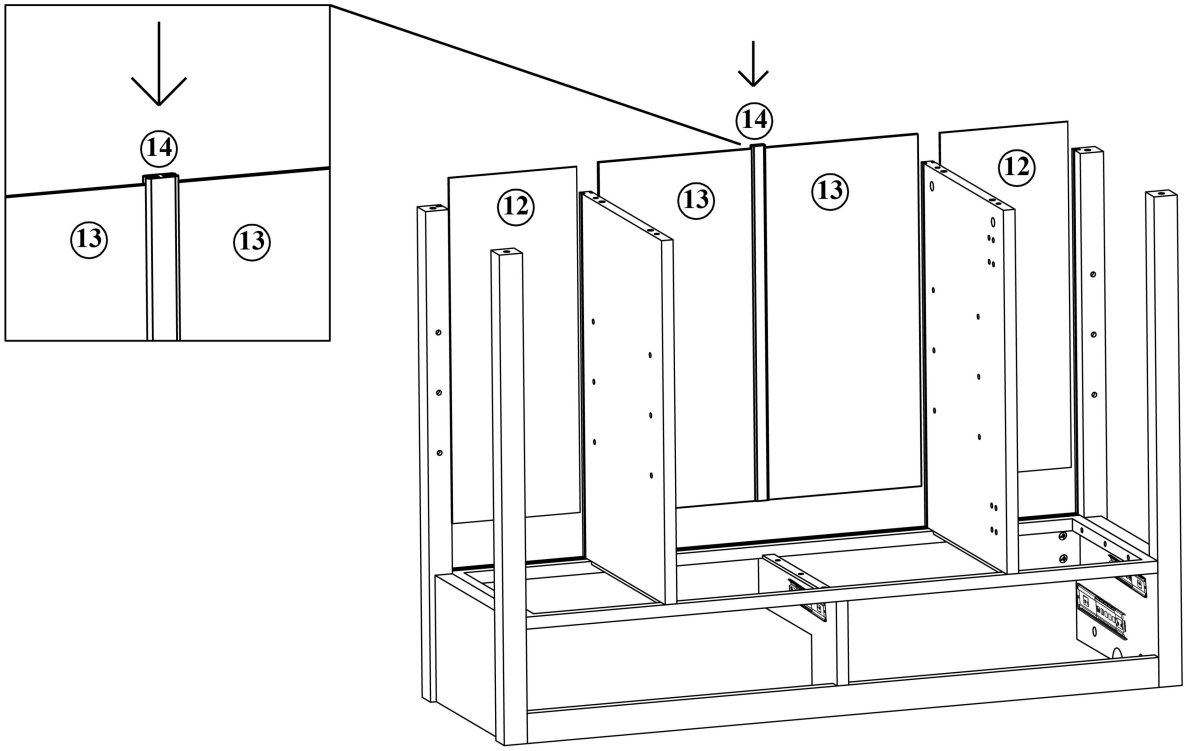
	 Ø4*35mm	 Ø15*9mm
Z x1	P6 x3	B x3

STEP 9

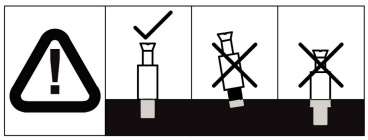


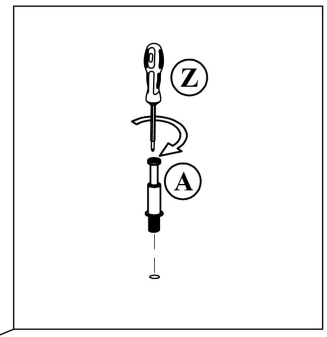
	 Ø4*25mm
Z x1	P5 x6

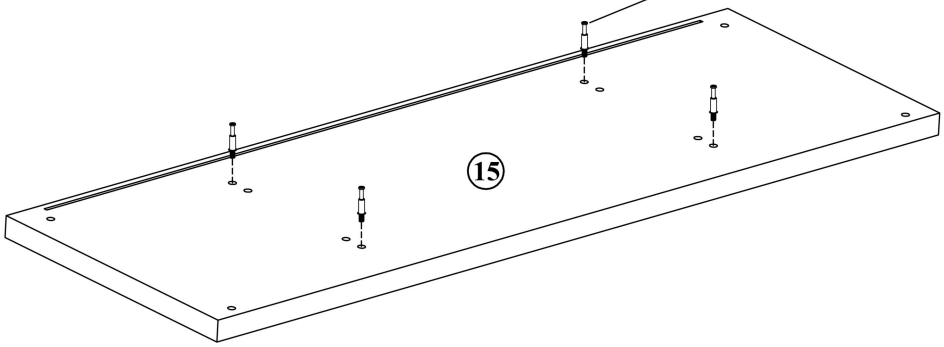
STEP 10



STEP 11

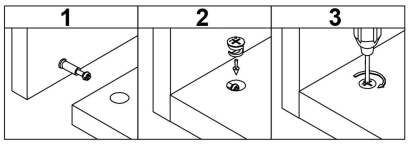


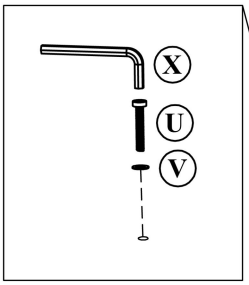


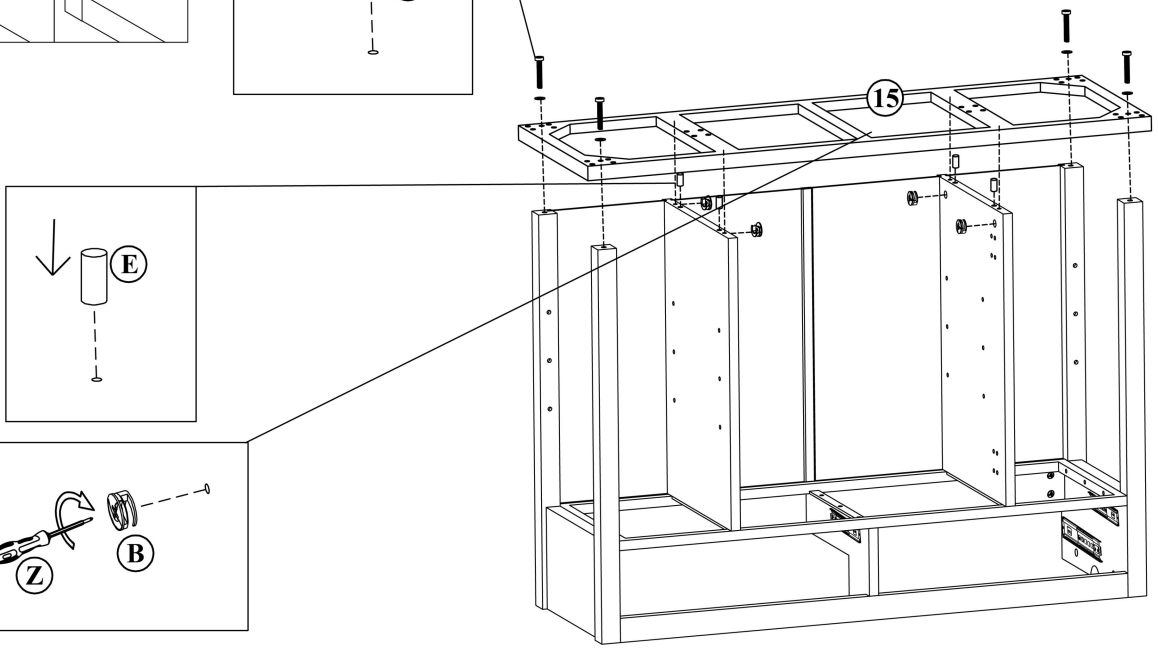


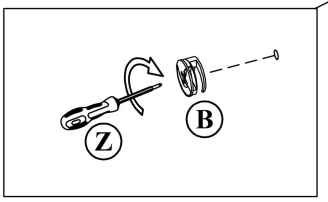
	Ø6*35mm
Z x1	A x4

STEP 12



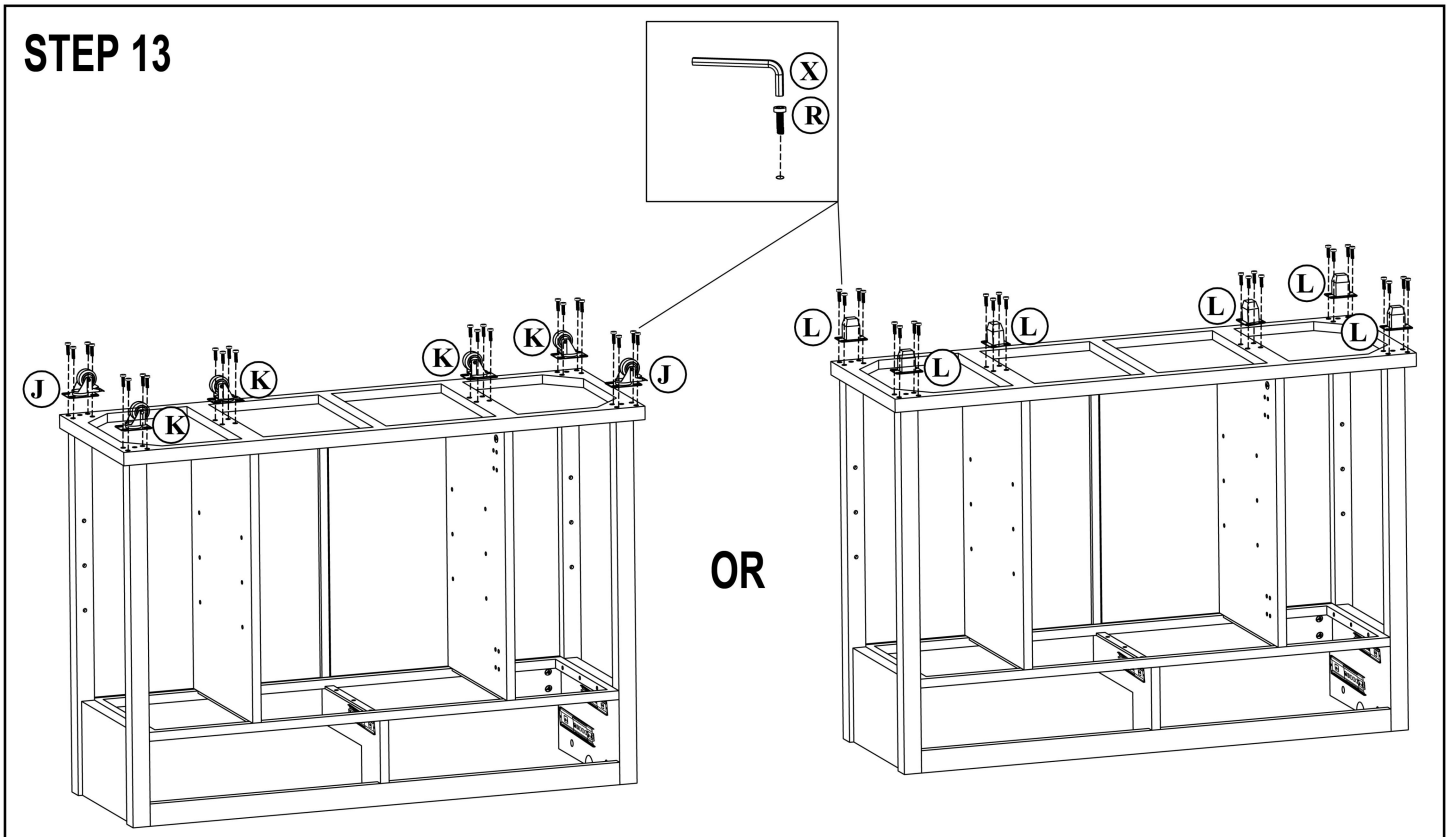






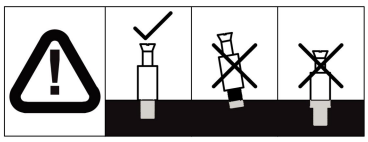
	Ø8*25mm	Ø6*35mm	Ø14*1mm		Ø15*9mm
Z x1	E x4	U x4	V x4	X x1	B x4

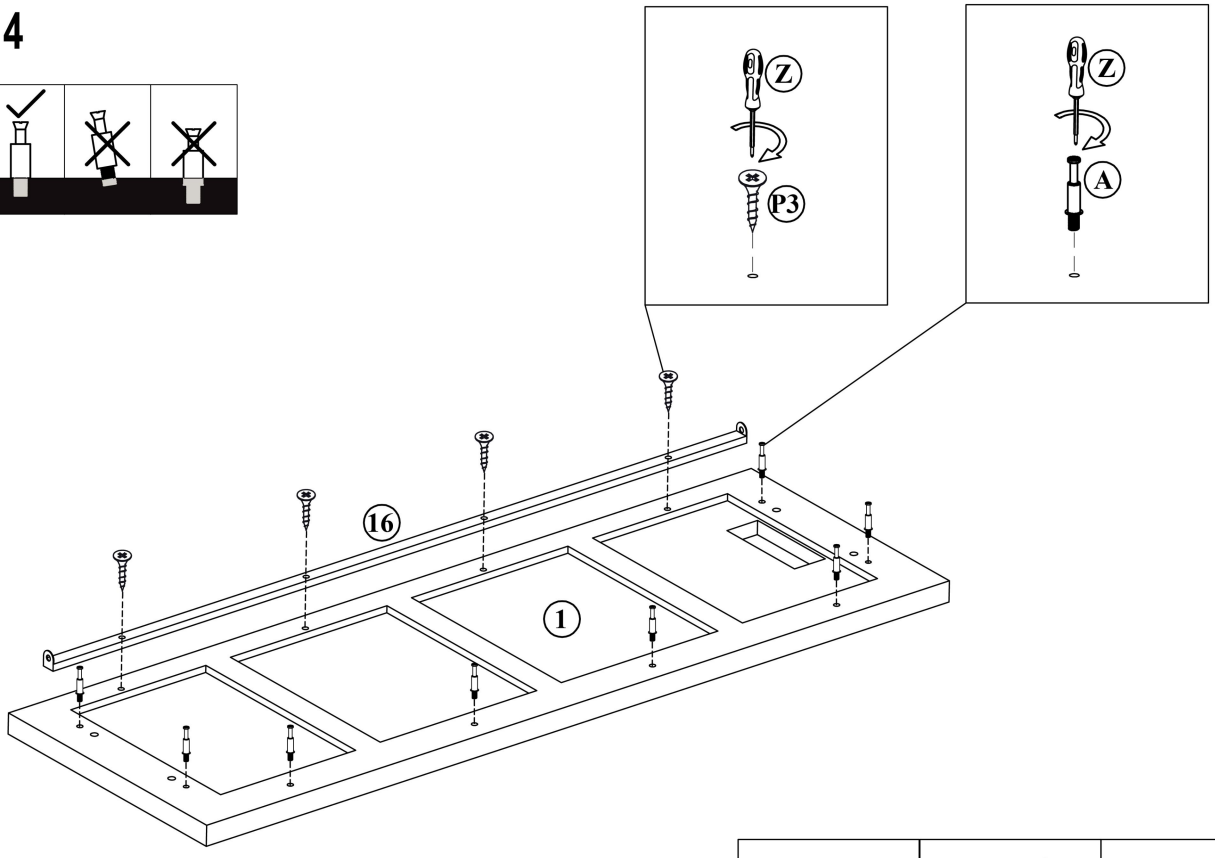
STEP 13



Ø6*15mm				
R x24	X x1	J x2	K x4	L x6

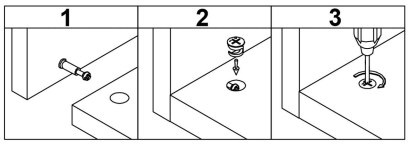
STEP 14

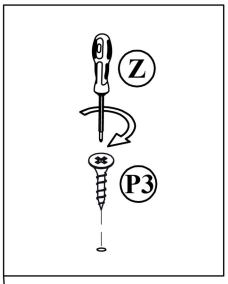


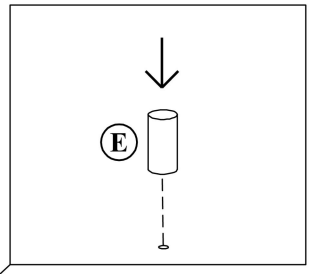


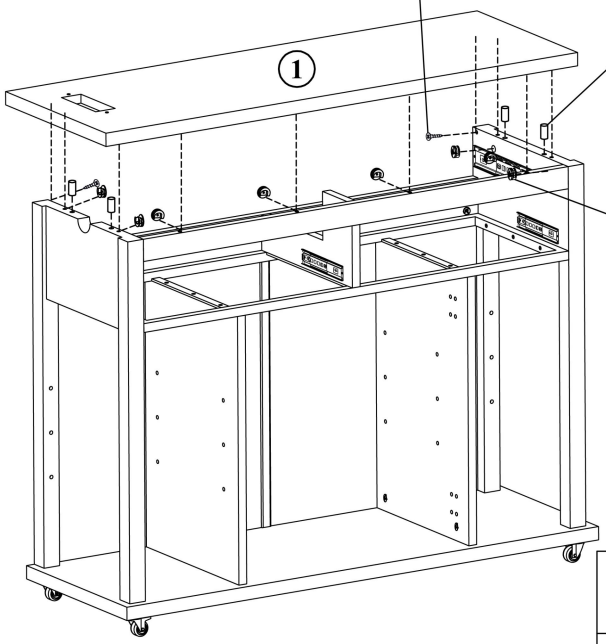
	Ø6*35mm	Ø3.5*16mm
Z x1	A x8	P3 x4

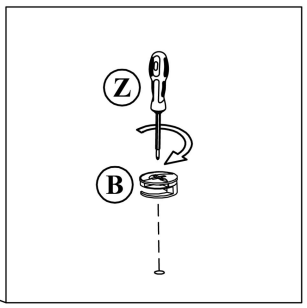
STEP 15





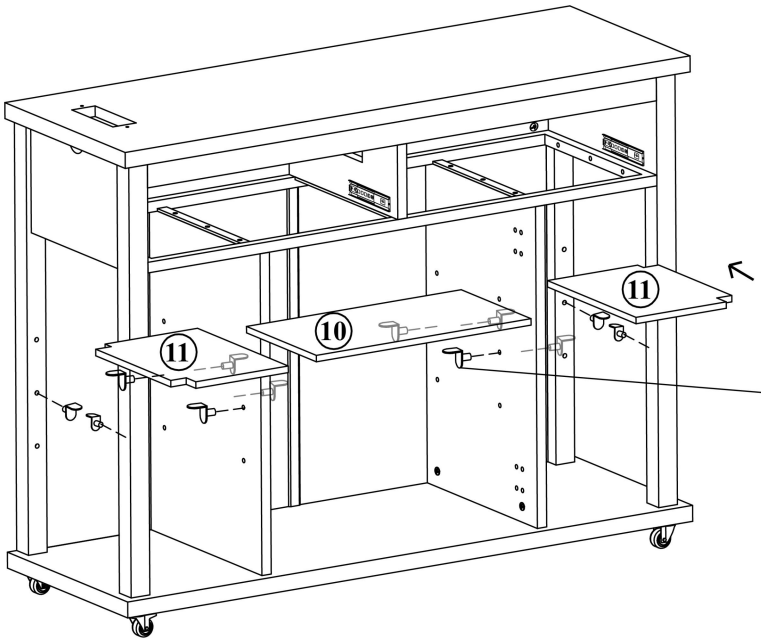


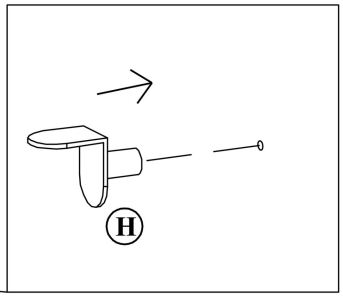




			
Z x1	Ø3.5*16mm P3 x2	Ø15*9mm B x8	Ø8*20mm E x4

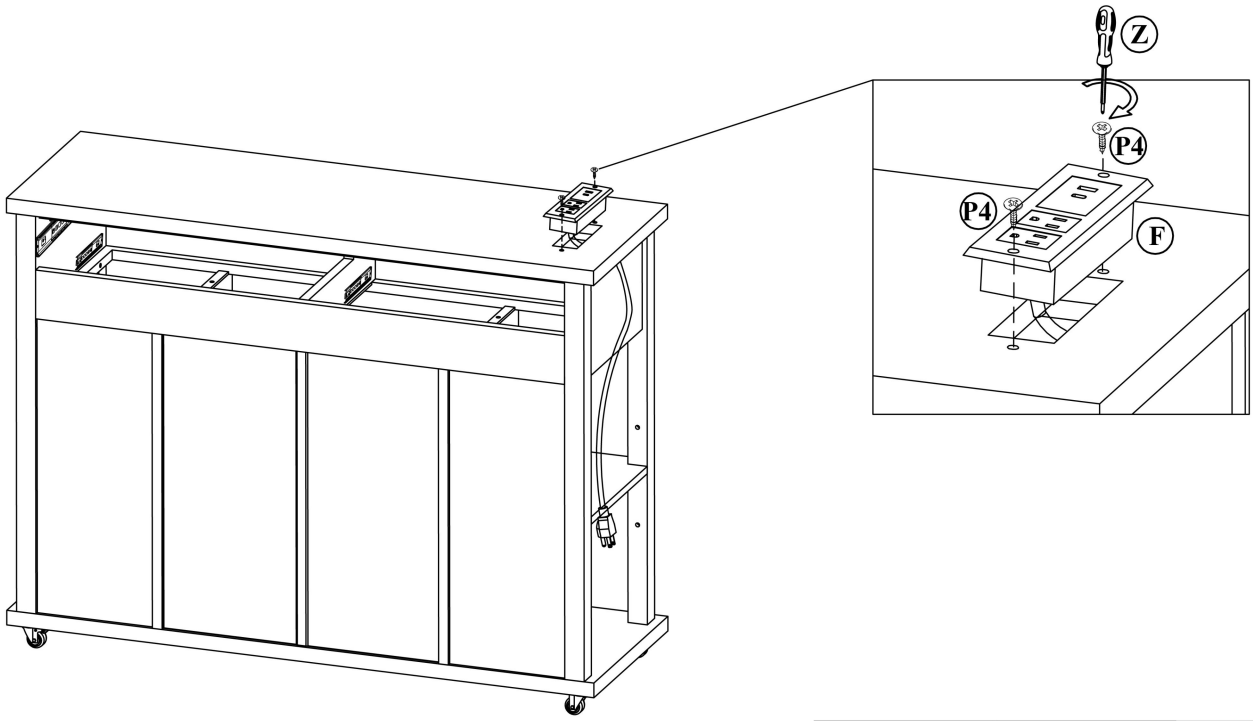
STEP 16

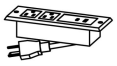




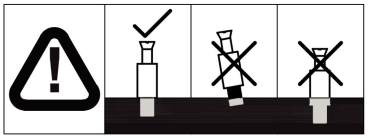

H x12

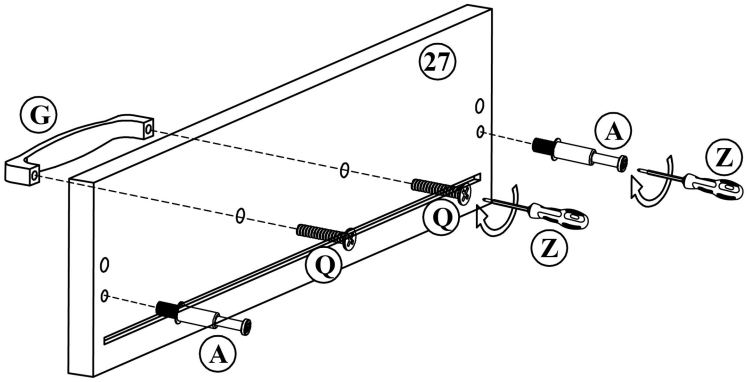
STEP 17

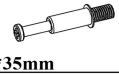


		 Ø4*12mm
Z x1	F x1	P4 x2

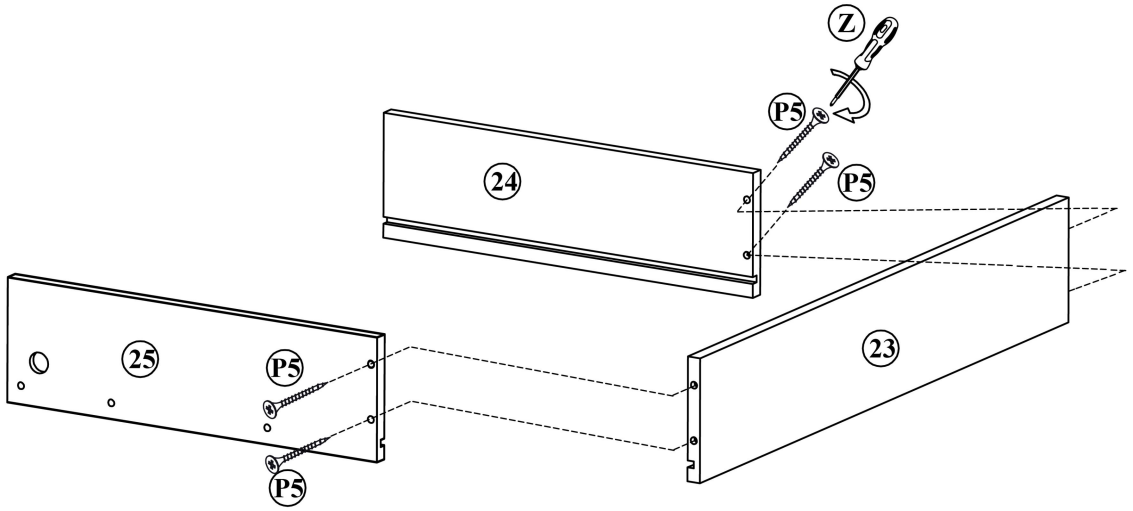
STEP 18 X2





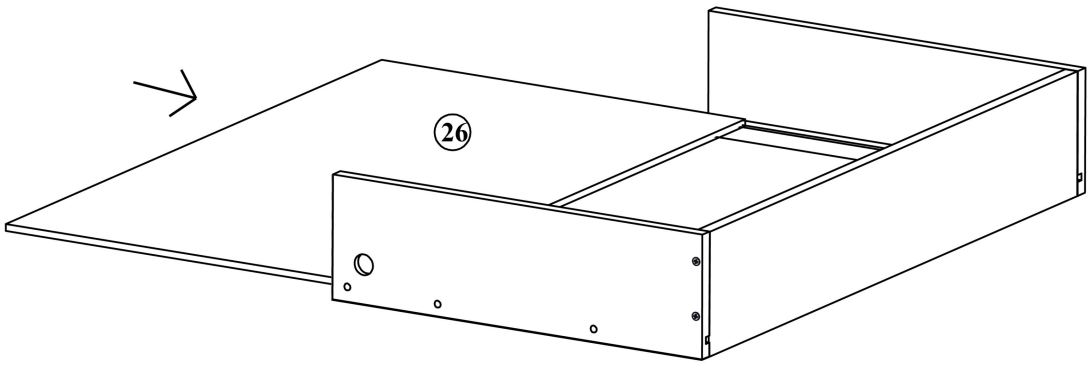
	 Ø6*35mm		 Ø4*25mm
Z x1	A x4	G x2	Q x4

STEP 19 X2

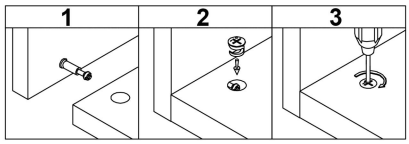


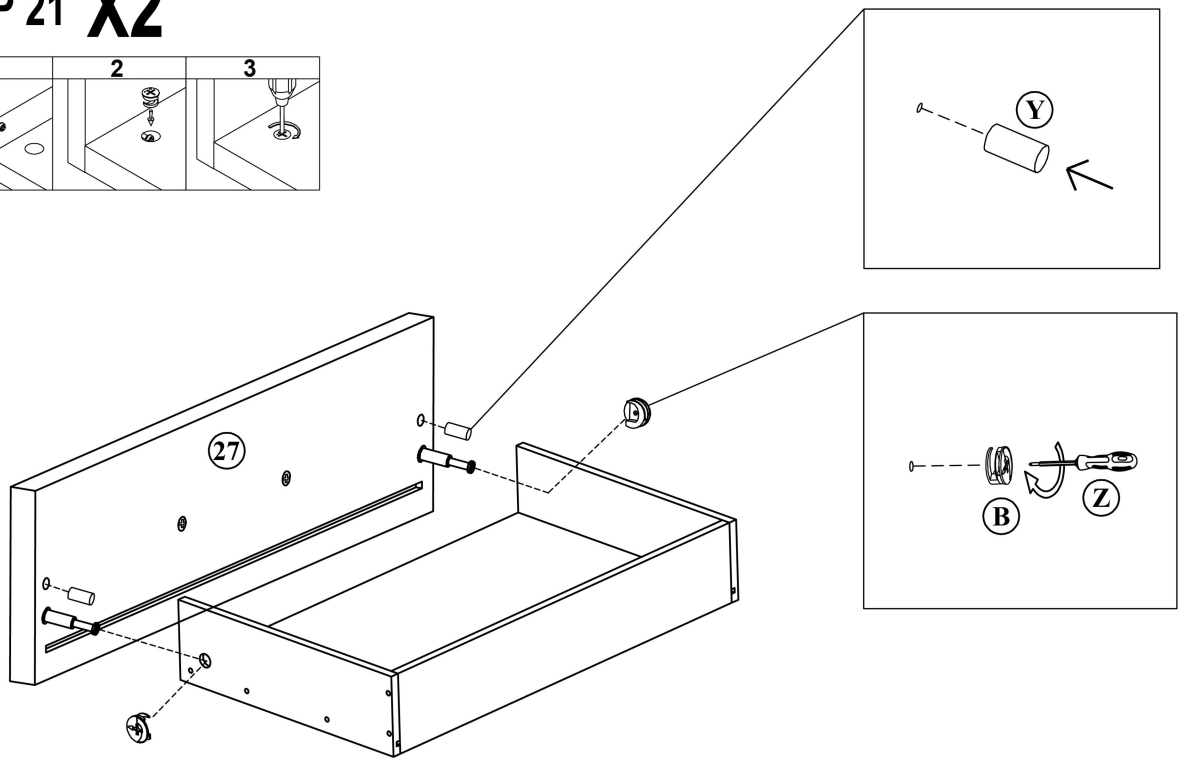
	 Ø4*25mm
Z x1	P5 x8

STEP 20 X2



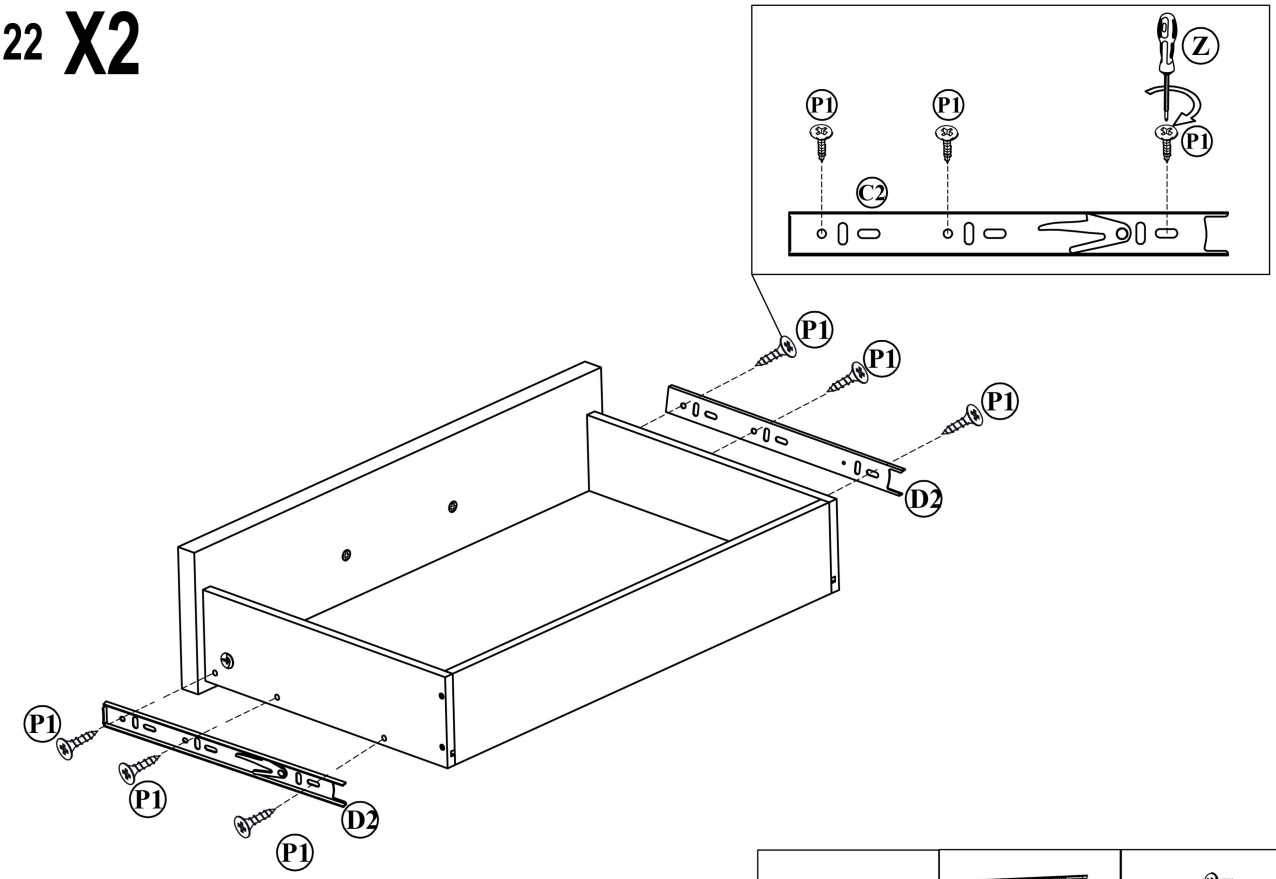
STEP 21 X2





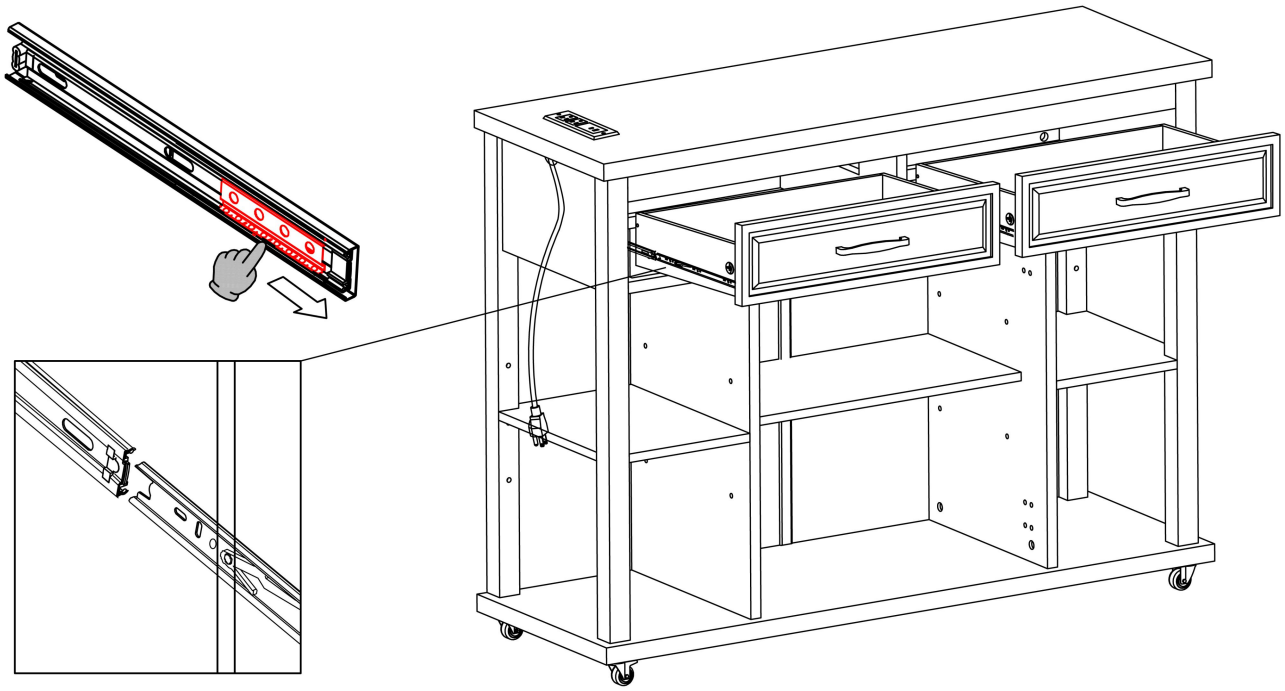
	Ø5*20mm	Ø15*9mm
Z x1	Y x4	B x4

STEP 22 X2

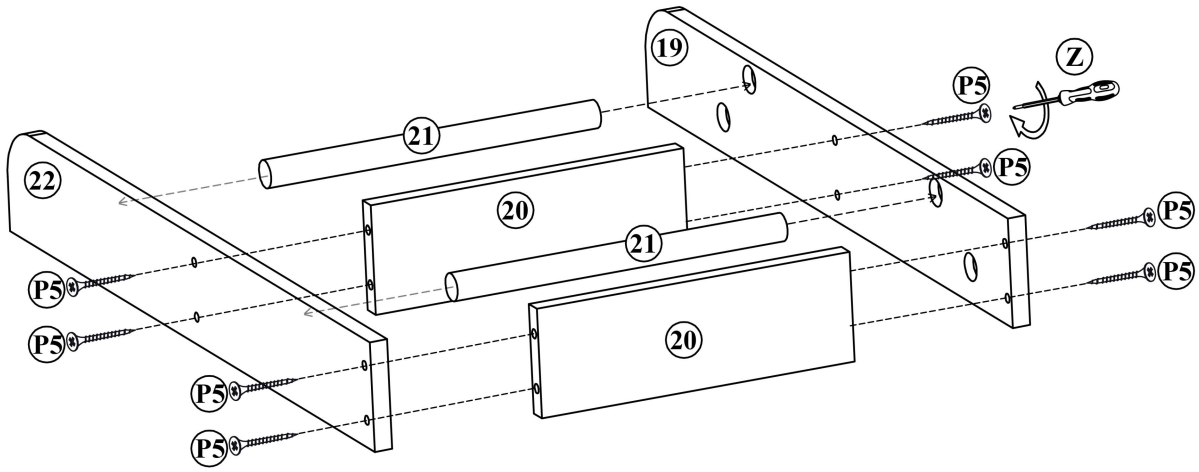


	240*35mm	Ø3*10mm
Z x1	D2 x4	P1 x12

STEP 23

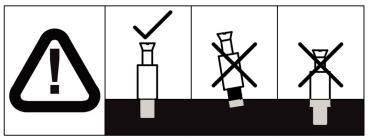


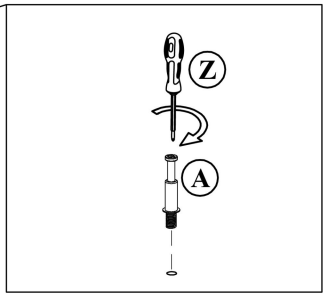
STEP 24 X2

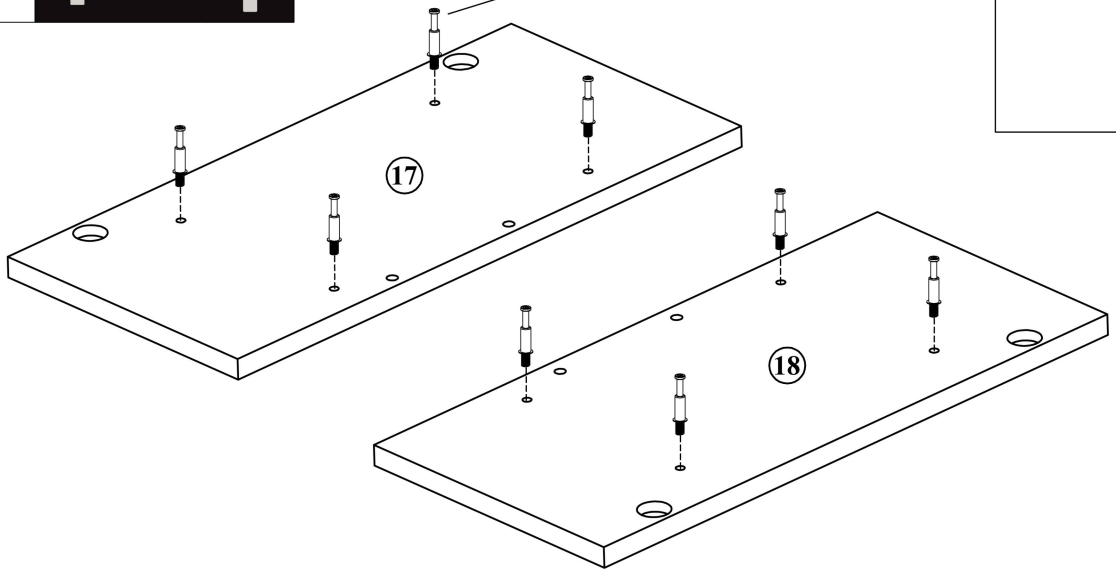


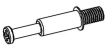
	Ø4*25mm
Z x1	P5 x16

STEP 25

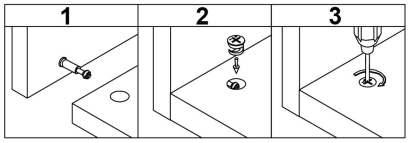


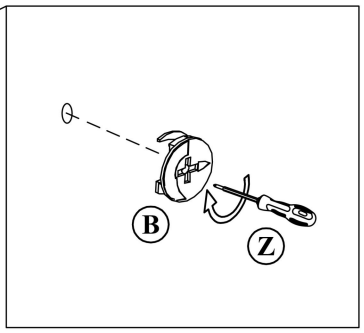


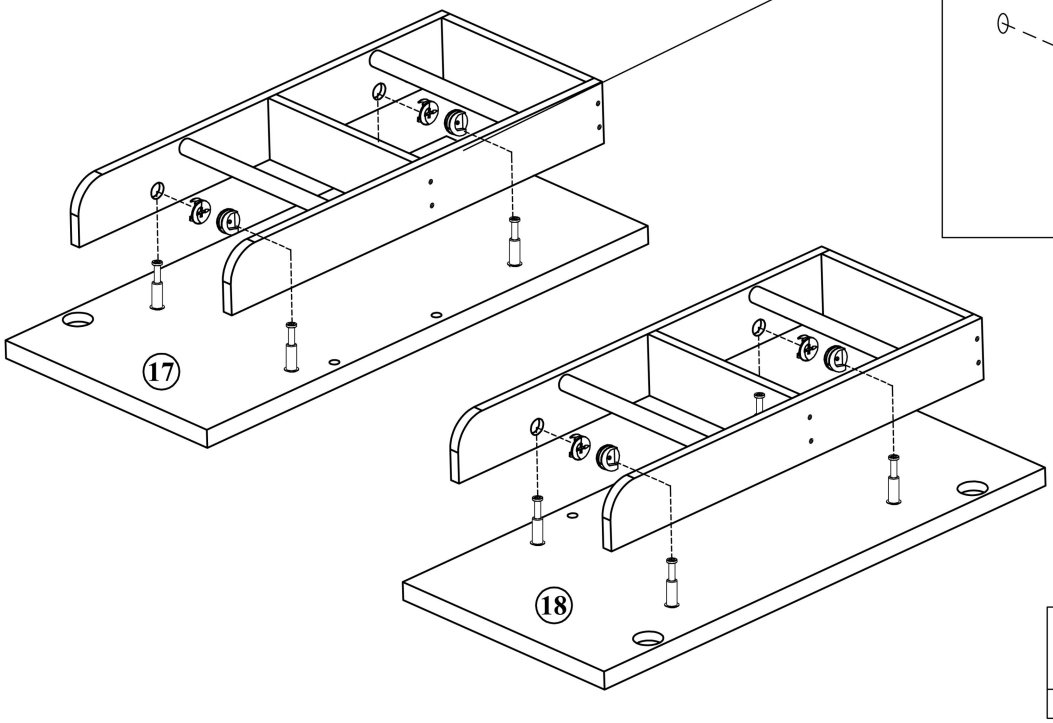


	 Ø6*35mm
Z x1	A x8

STEP 26

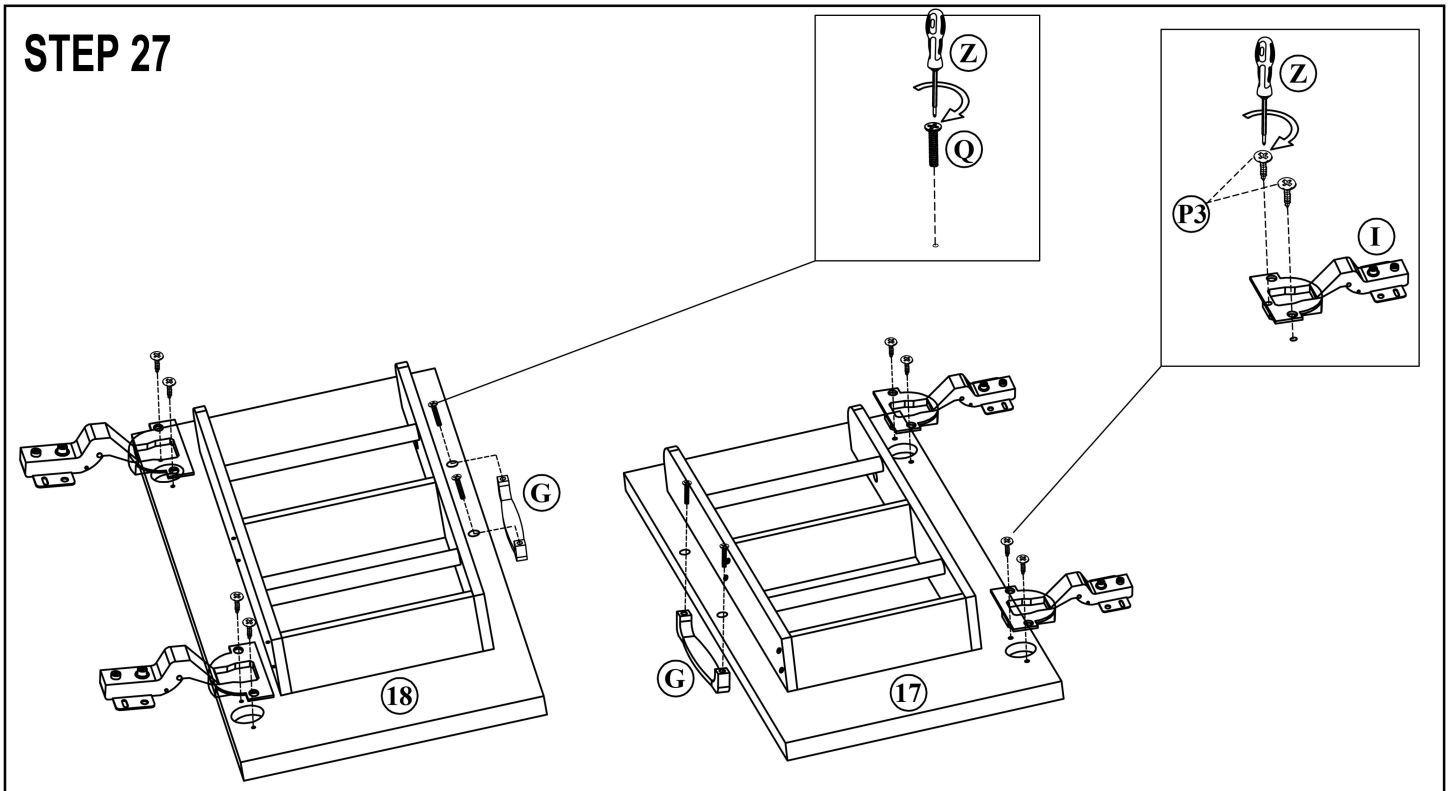


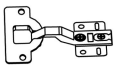




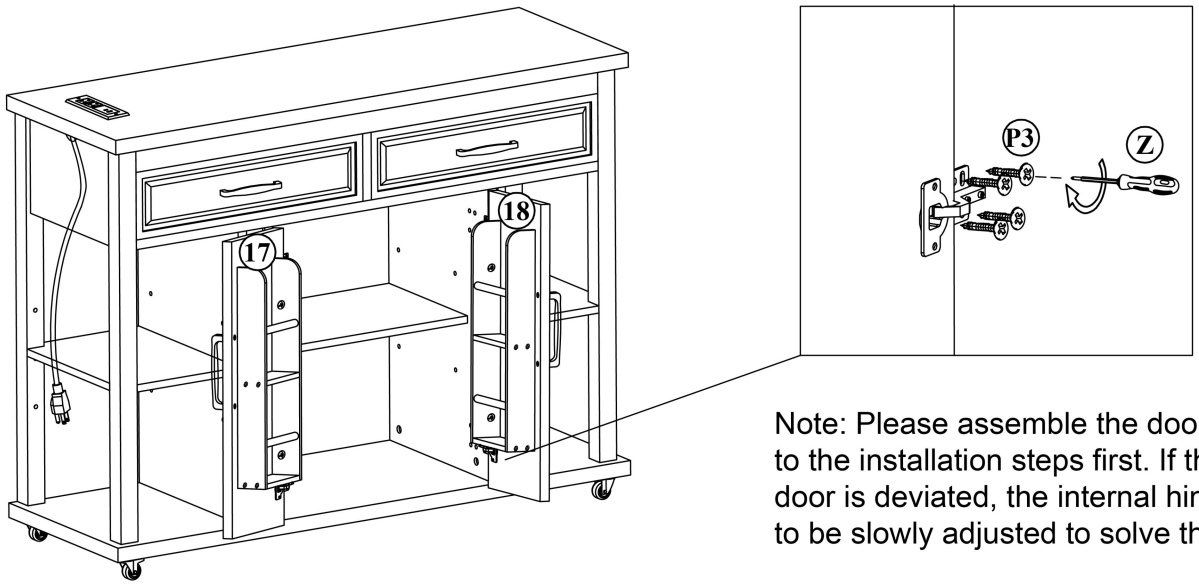
	 Ø15*9mm
Z x1	B x8

STEP 27



		 Ø4*25mm		 Ø3.5*16mm
Z x1	G x2	Q x4	I x4	P3 x8

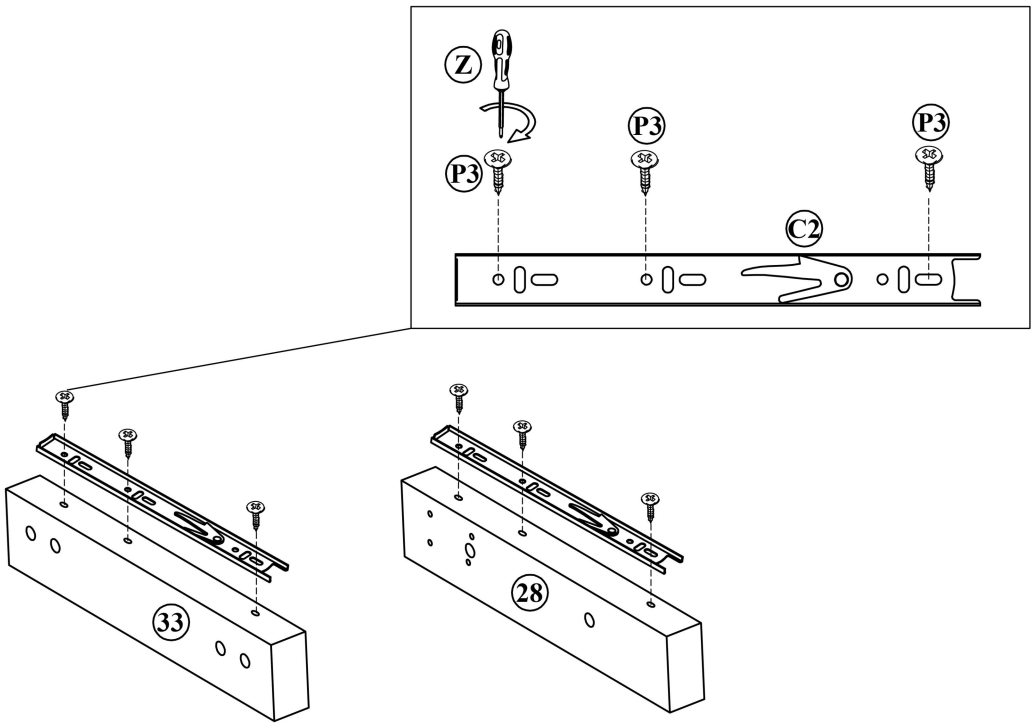
STEP 28



Note: Please assemble the door according to the installation steps first. If the cabinet door is deviated, the internal hinge needs to be slowly adjusted to solve the problem.

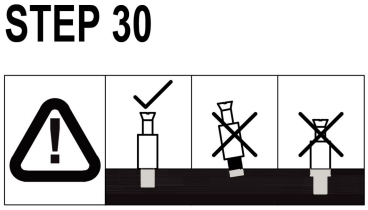
	 Ø3.5*16mm
Z x1	P3 x16

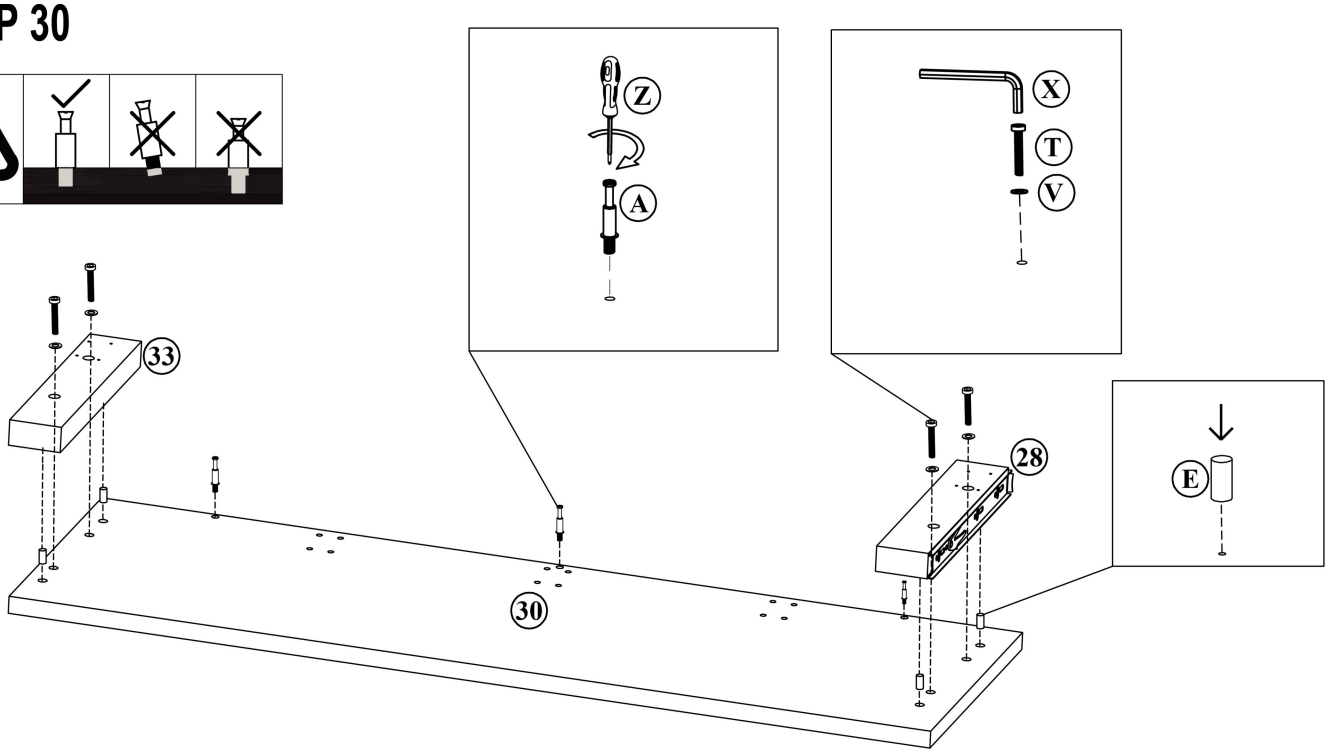
STEP 29



	300*45mm	Ø3.5*16mm
Z x1	C2 x2	P3 x6

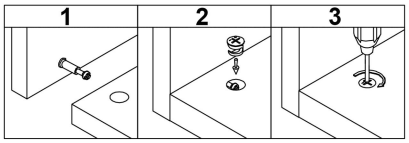
STEP 30

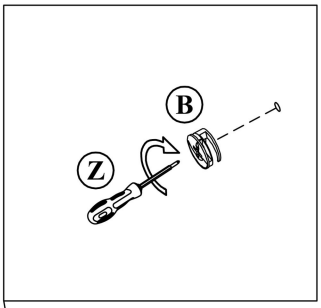


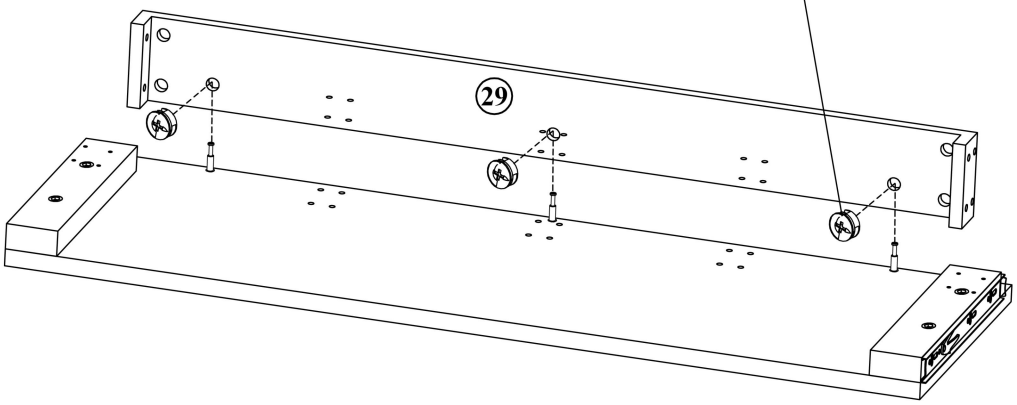


Ø8*20mm		Ø6*30mm	Ø14*1mm		Ø6*35mm
E x4	Z x1	T x4	V x4	X x1	A x3

STEP 31

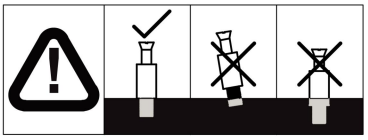


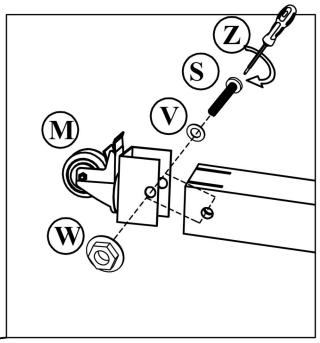


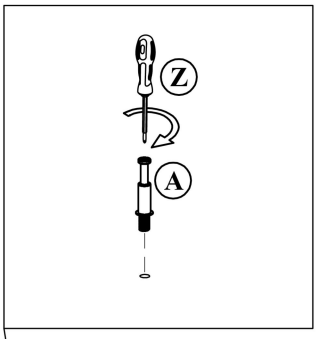


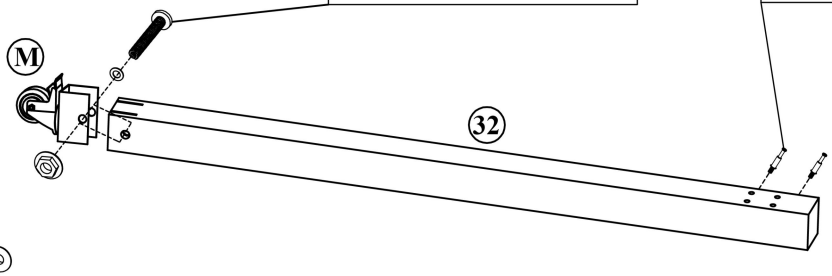
	 Ø15*9mm
Z x1	B x3

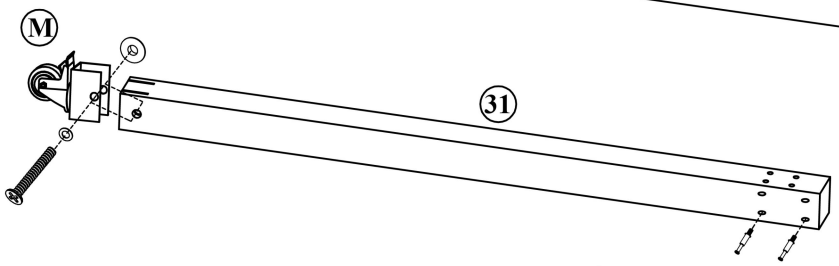
STEP 32

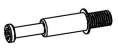




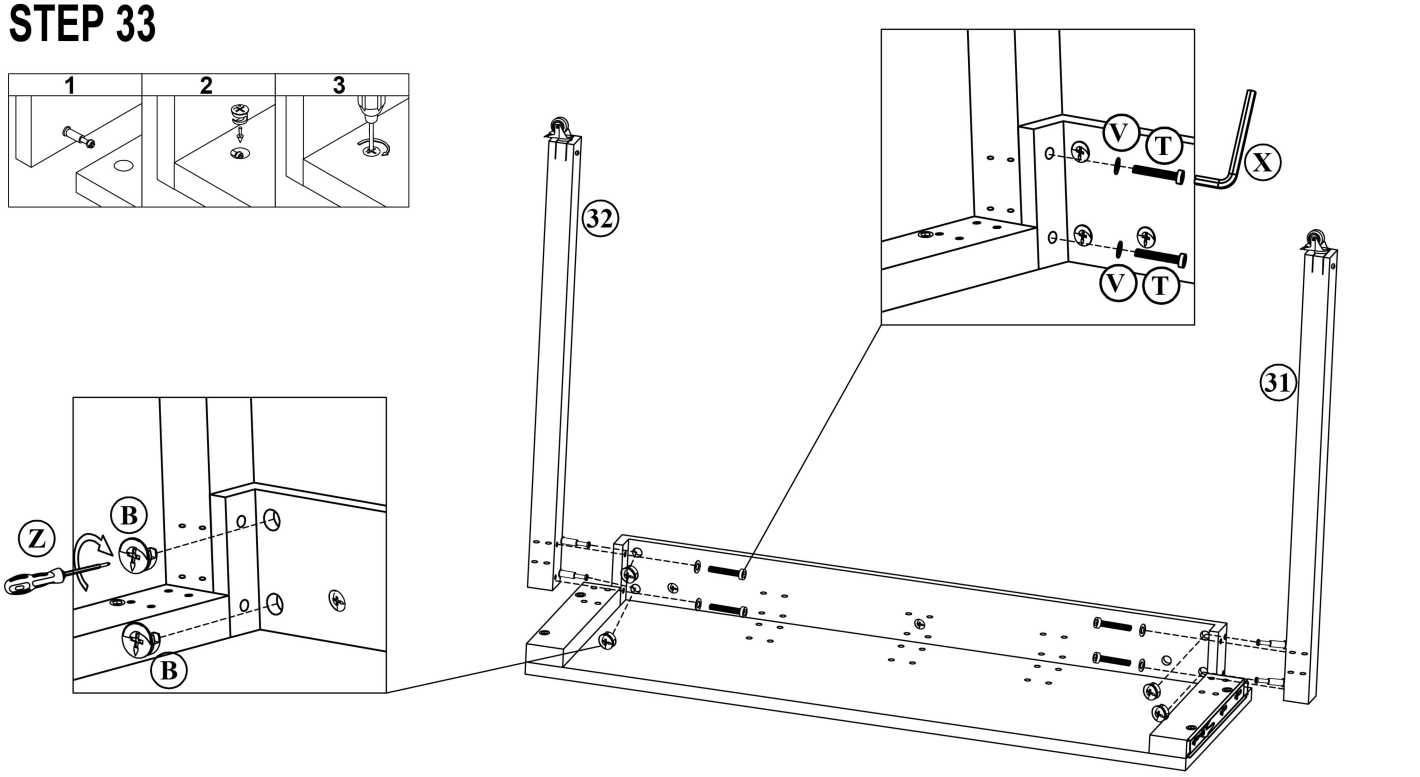






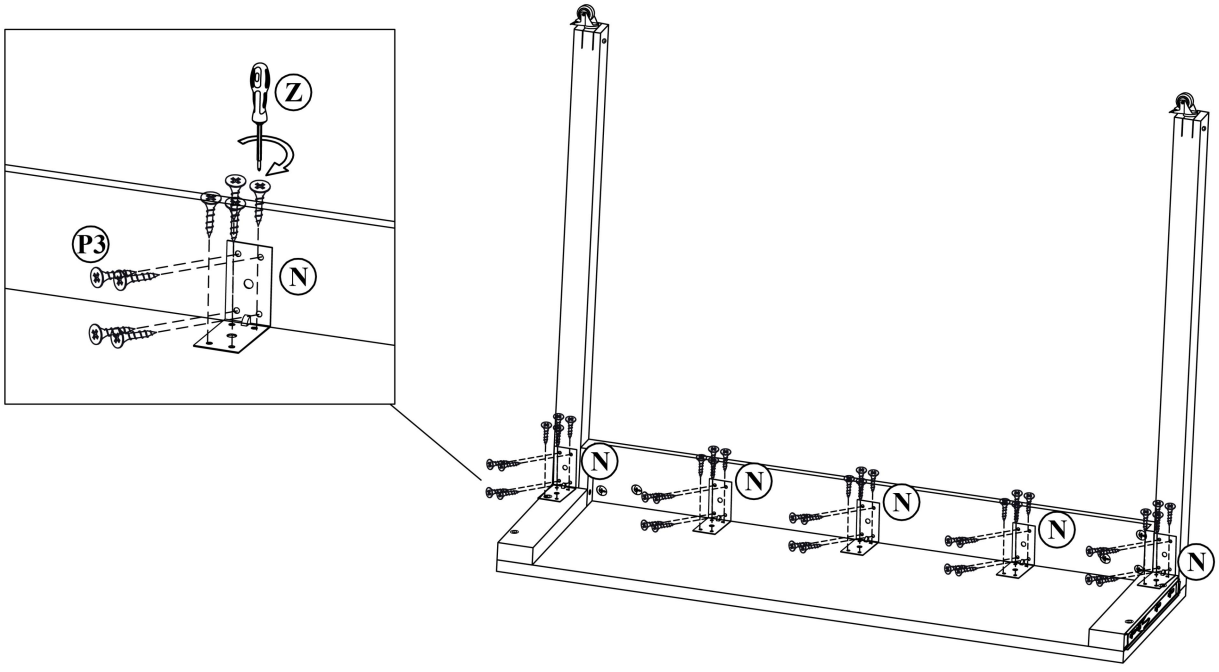
 Ø14*1mm		 Ø4*50mm			 Ø6*35mm
V x2	M x2	S x2	W x2	Z x1	A x4

STEP 33



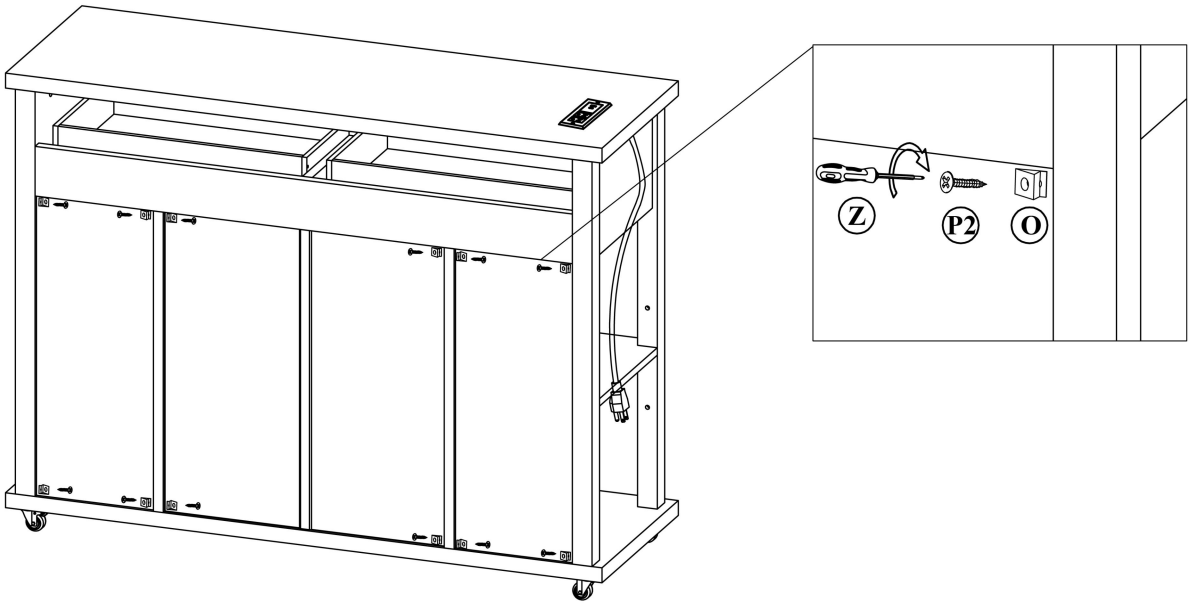
	Ø6*30mm	Ø14*1mm		Ø15*9mm
Z x1	T x4	V x4	X x1	B x4

STEP 34



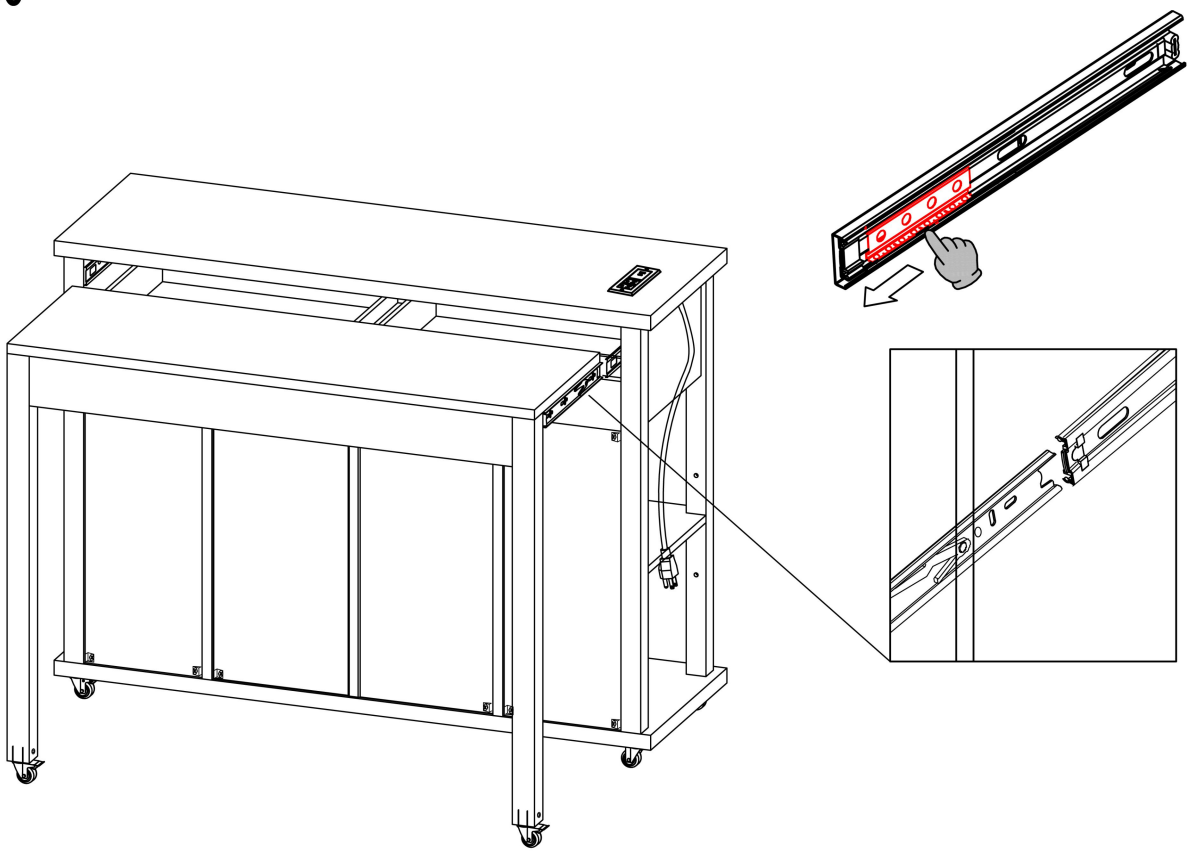
	65*65*38mm	Ø3.5*16mm
Z x1	N x5	P3 x40

STEP 35



		Ø3*14mm
Z x1	O x12	P2 x12

STEP 36



STEP 37

