Bar Cabinets
Assembly Instruction

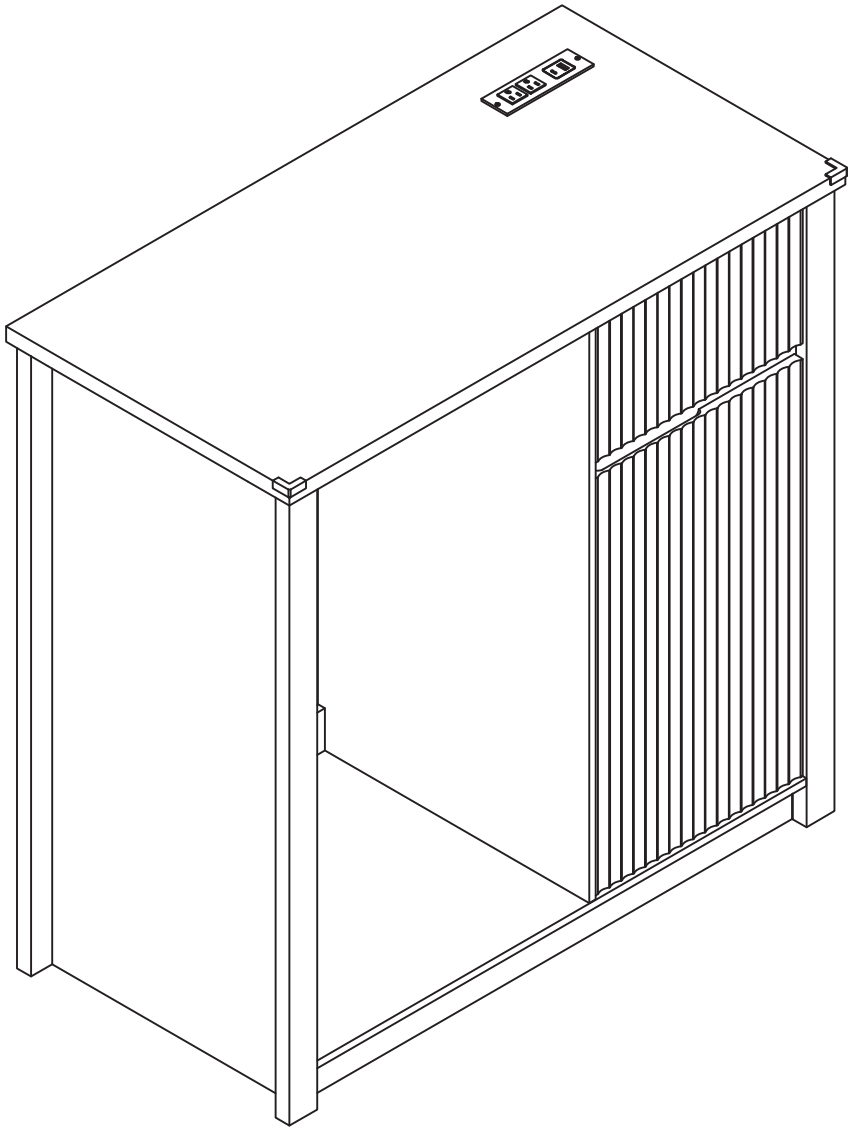



INTRODUCTION

Thank you for purchasing our products. Please read the instructions carefully before installationand keep it in a safe place for future refe rence.If you need any assistance or support, please feelfree to cont act our customer support team.

1. Serious or fatal crushing injuries can occur as a result of furniture tip-over.
2. The installation process must strictly adhere to these instructions, as incorrect installation may create safety hazards.
3. To prevent tip-over incidents, it is essential to use the provided wall attachment device(s).
4. While the use of the wall attachment can reduce the risk of tip-over, it cannot completely eliminate it.
5. Regularly inspect and ensure that the anchor is securely maintained.
6. It is crucial not to allow children to climb or hang on drawers.
7. Although your product includes a wall attachment, please note that screws and plugs for securing it to the wall need to be purchased separately according to your specific wall type.
8. Your local hardware store will have suitable drill bits and fixings available and can provide guidance if needed.
9. Before drilling holes, always check for any wires or pipes inside the wall (if uncertain, consult a qualified technician).
10. If you are unsure about any aspect, consider hiring a qualified technician for proper installation and securement of the product.

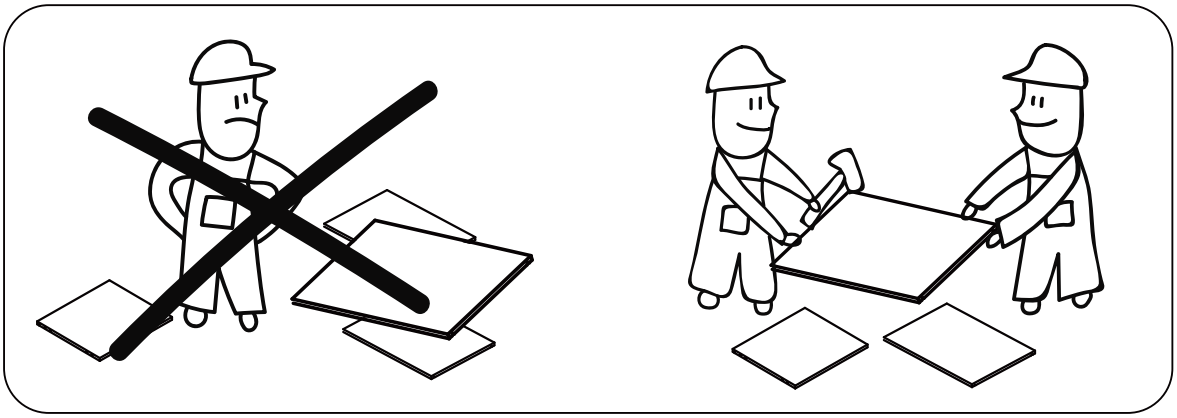

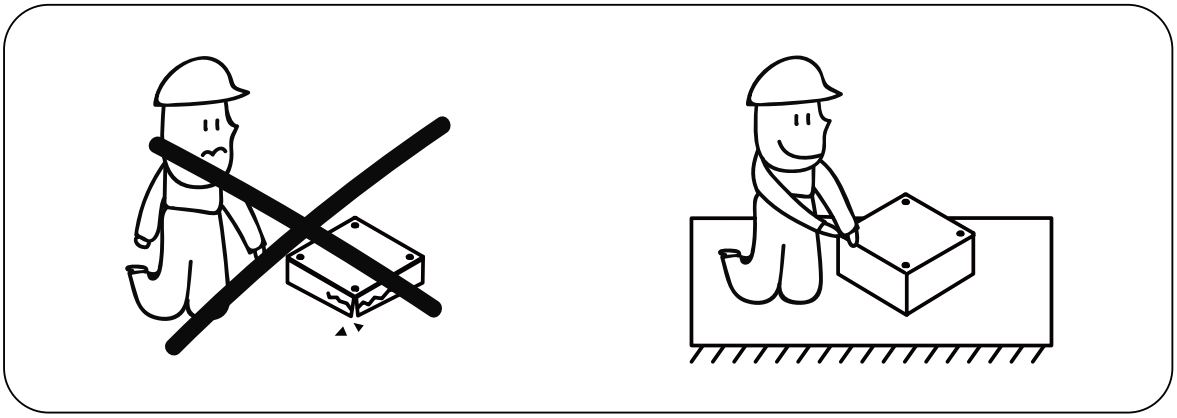

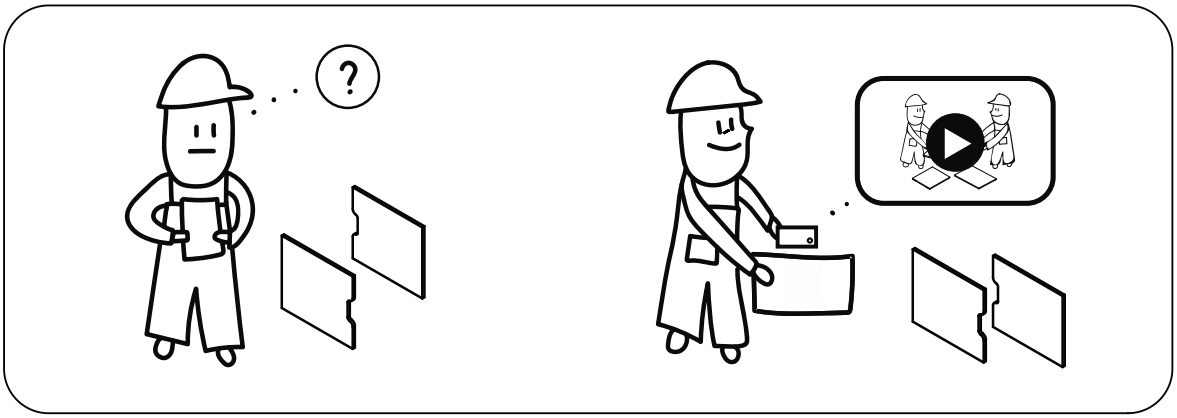

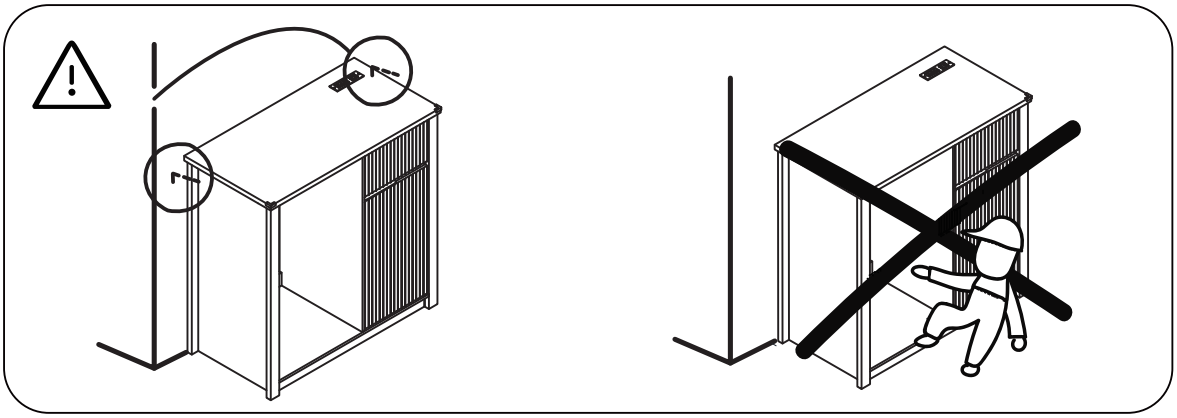

BOARD IDENTIFICATION

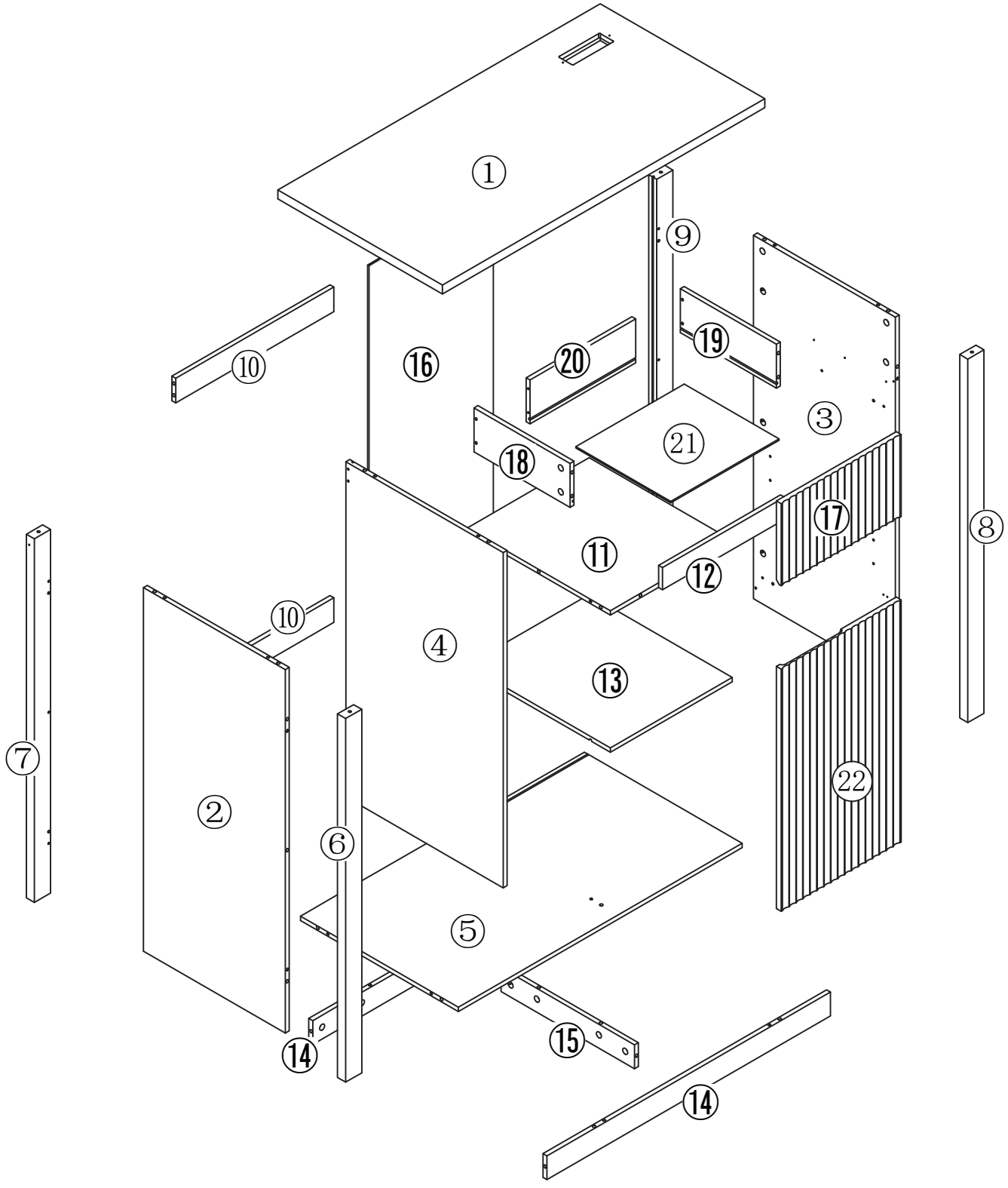

PARTS LIST

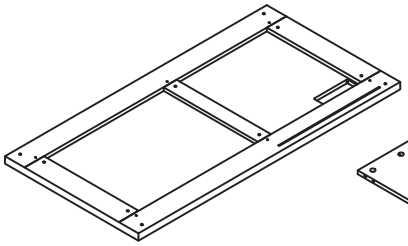

①

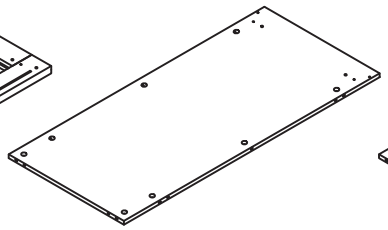

②

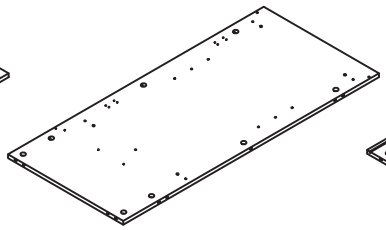

③

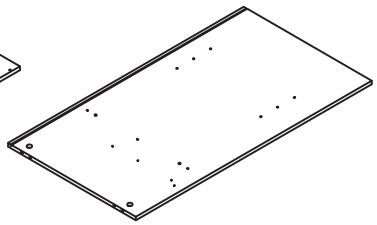

④

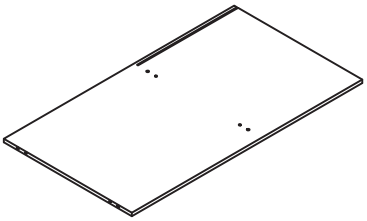

⑤

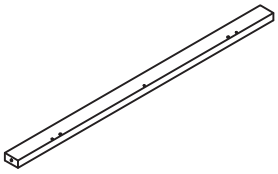

⑥

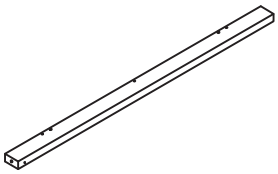

⑦

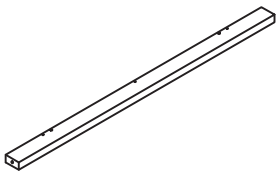

⑧

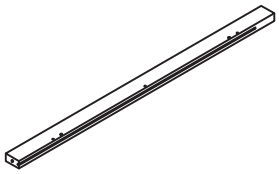

⑨

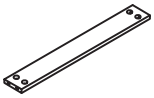

⑩×2

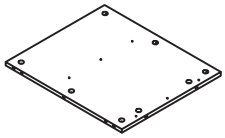

⑪

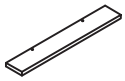

⑫

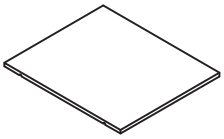

⑬

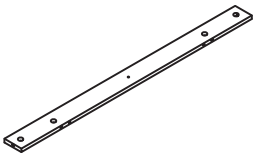

⑭×2

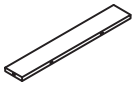

⑮

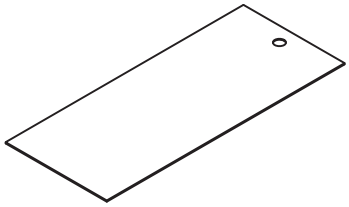

⑯

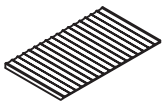

⑰

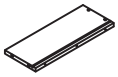

⑱

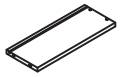

⑲

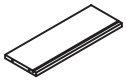

⑳

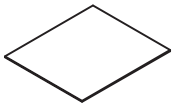

㉑

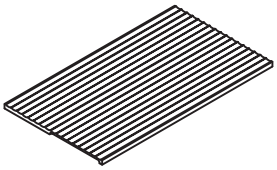

㉒

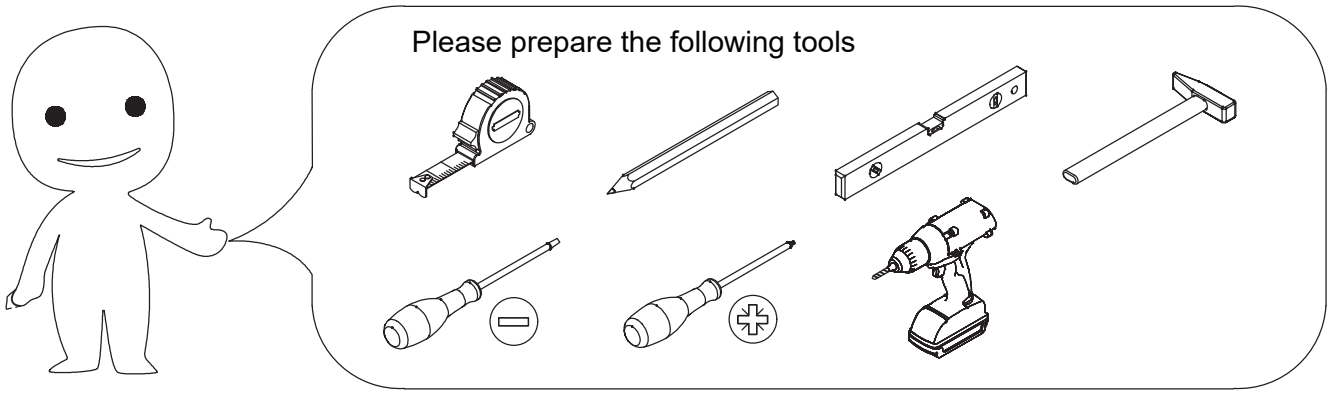

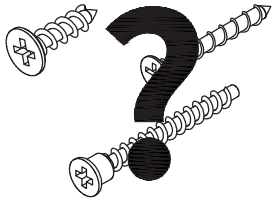

When installing, please carefully confirm whether each screw corresponds to the manual, accessories with similar shapes can be distinguished by size

Tips:The number after " + " represents the spare hardware

A×54 +2	B×54 +2	C×32 +2	D×2
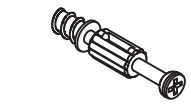 6×35mm	 ⌀15×9.5	 ⌀6×30	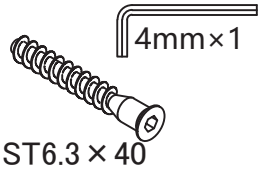 4mm×1 ST6.3×40

E	F×12 +2	G×4	H×4
×24 +2  3×12  ×8	 3.5×12	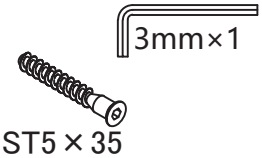 3mm×1 ST5×35	

I×54	J	K×2	L×1
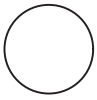	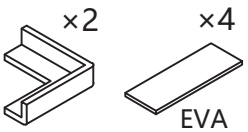 ×2 ×4 EVA	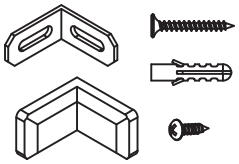	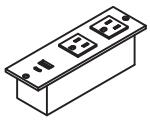

M (CL) ×1	M (CR) ×1	M (DL) ×1	M (DR) ×1
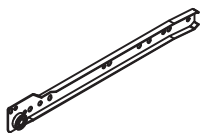	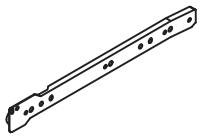	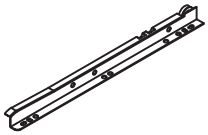	

N×3	O×2
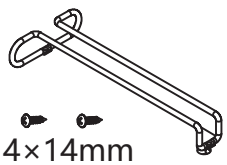 4×14mm	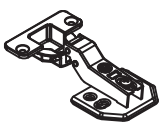

1

A×27	
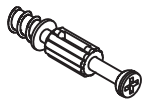 6×35mm	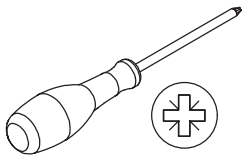

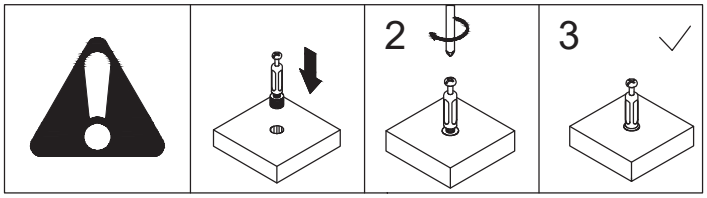

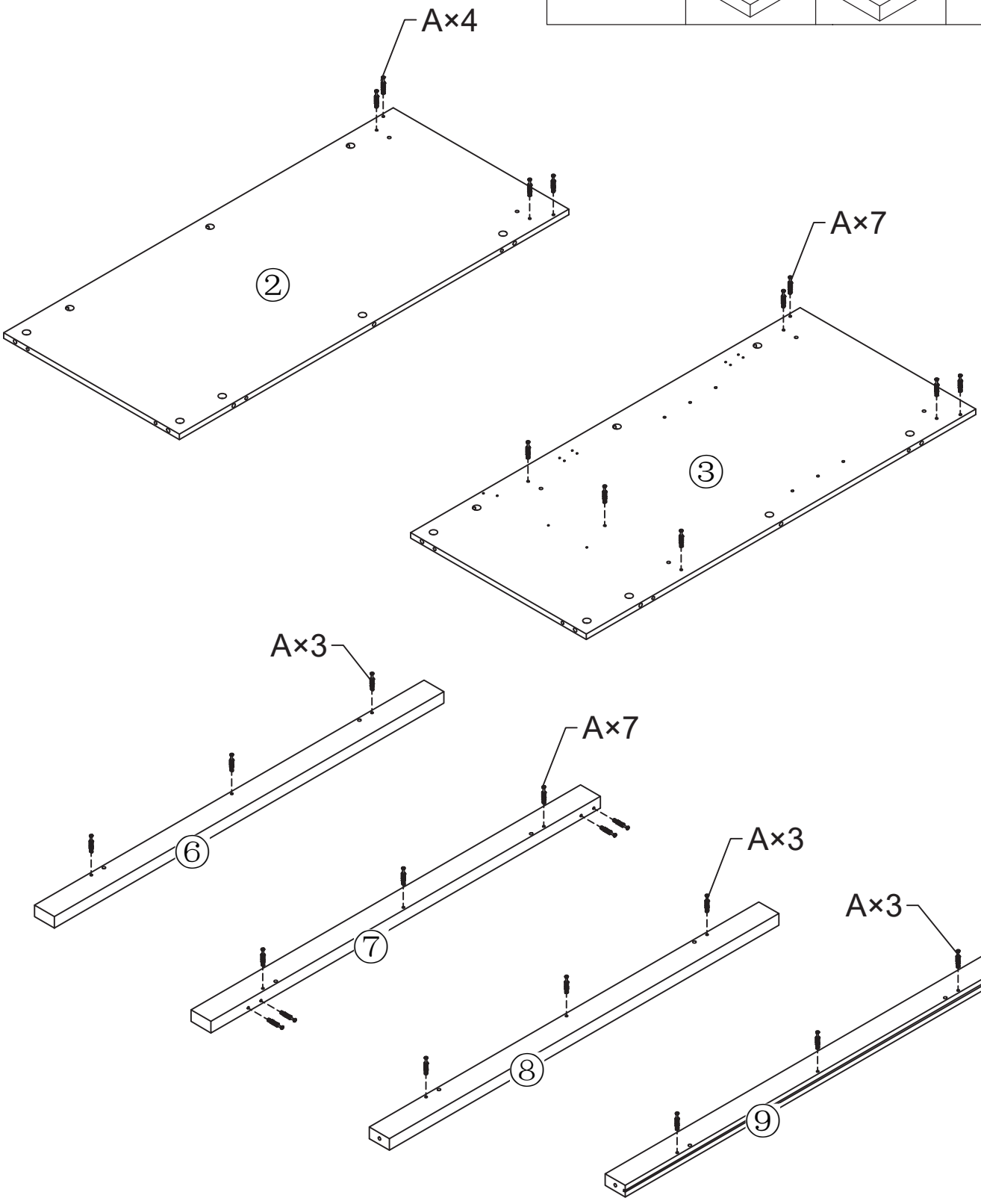

2

B×12	C×8	
 ⌀15×9.5	 ⌀6×30	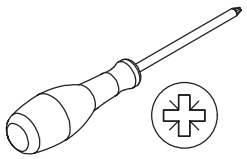

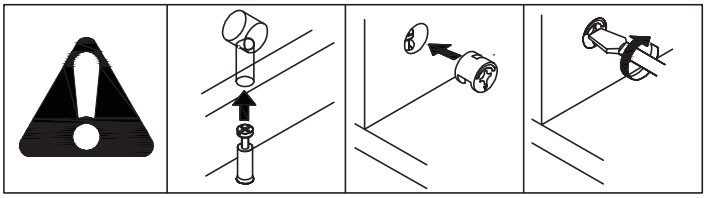

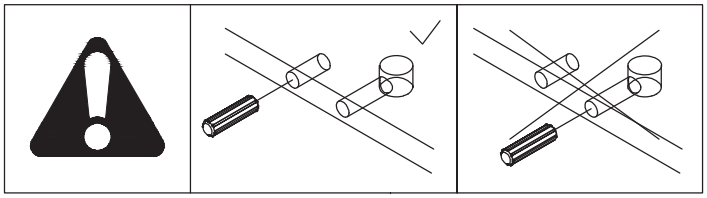

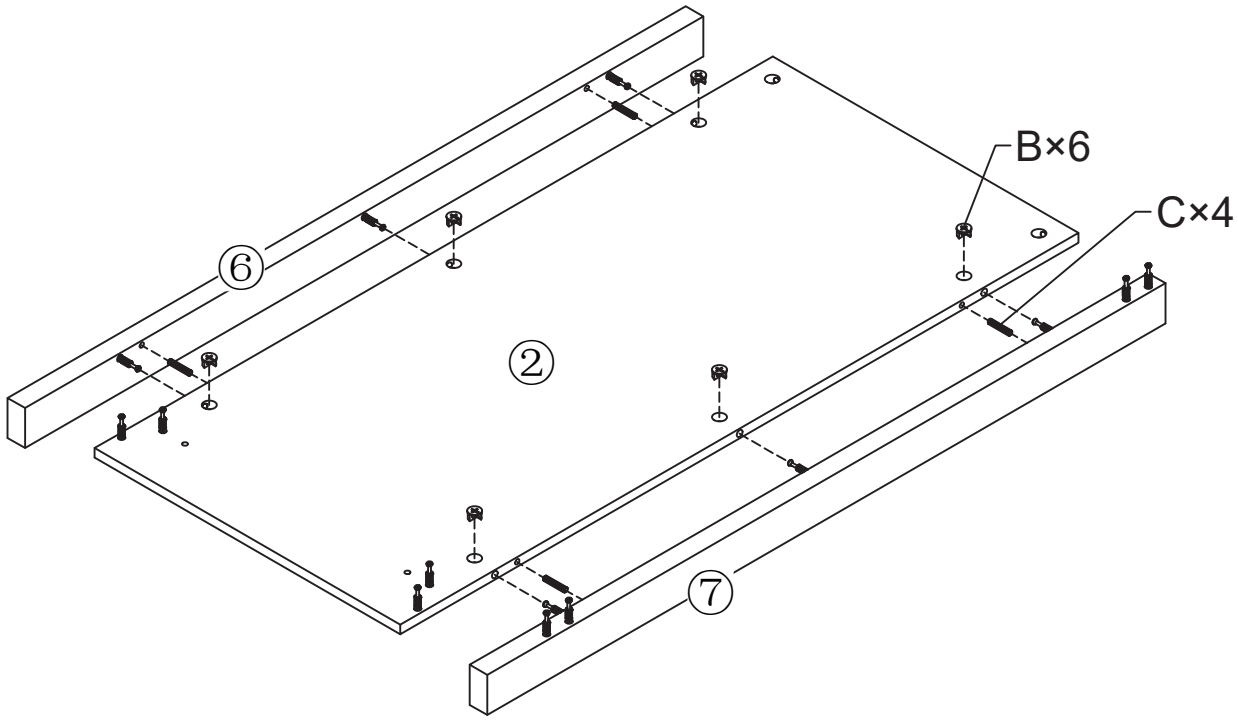

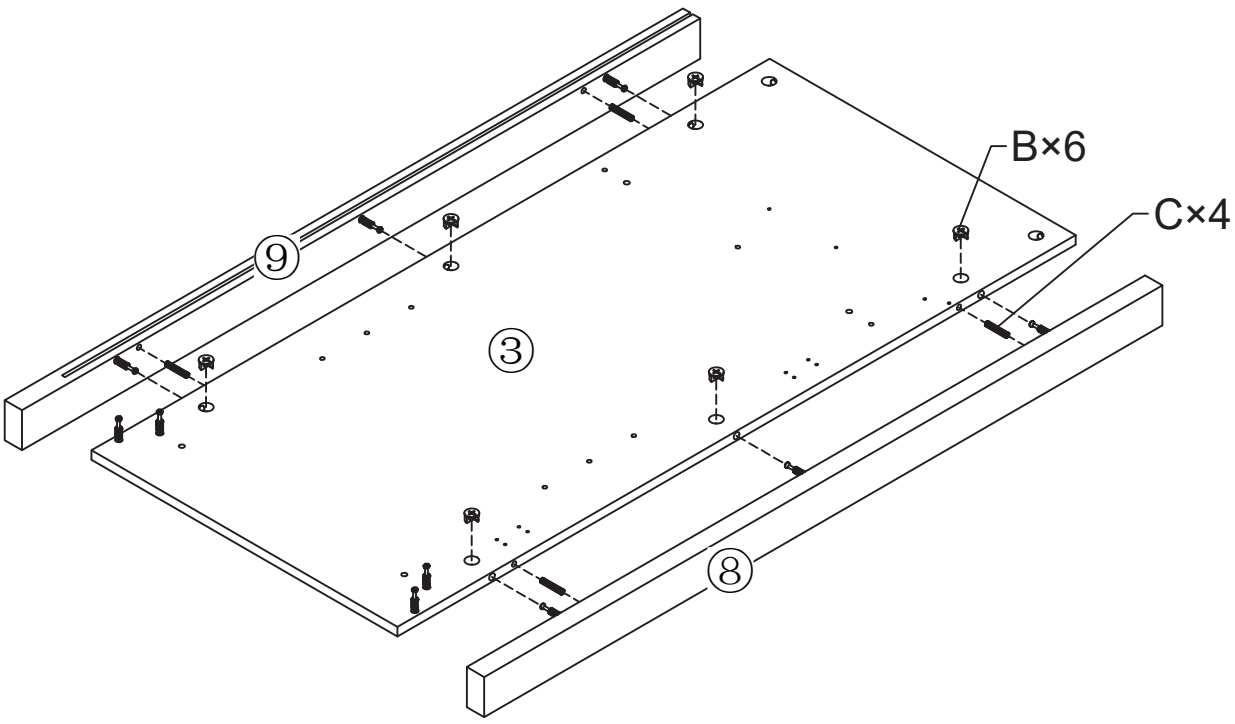

3

A×23	
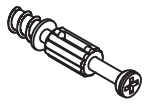 6×35mm	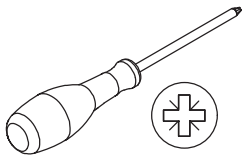

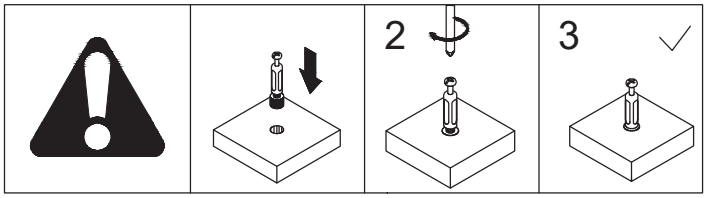

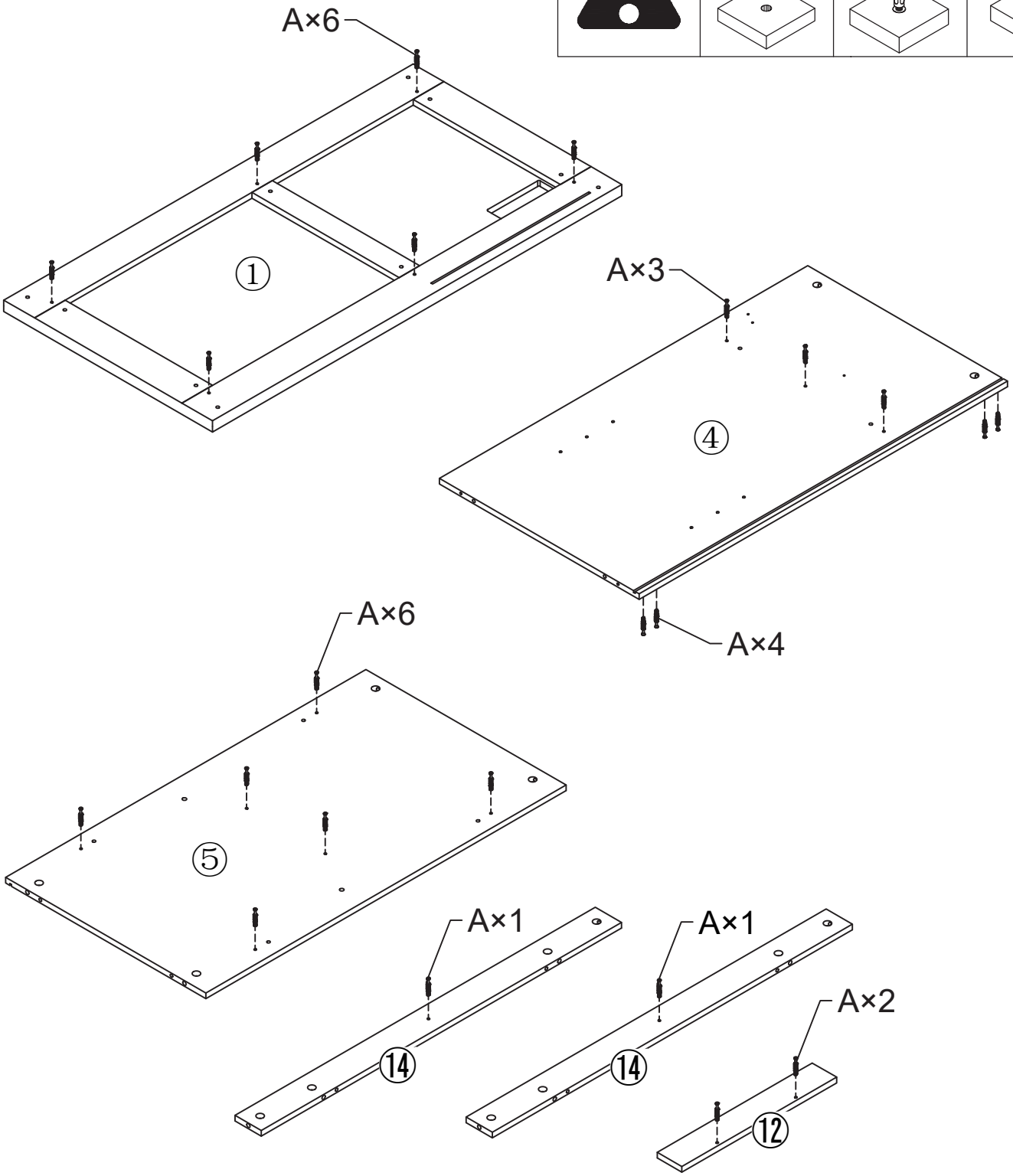

4

E×8	M (CL) ×1	M (CR) ×1	
3×12			

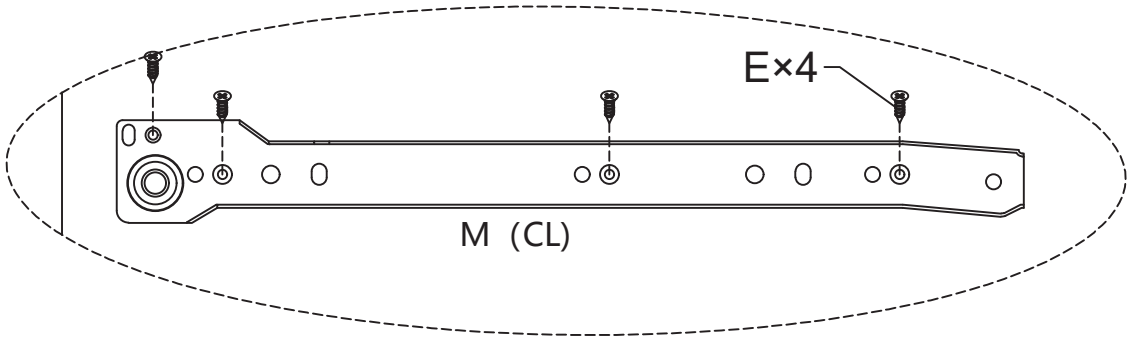

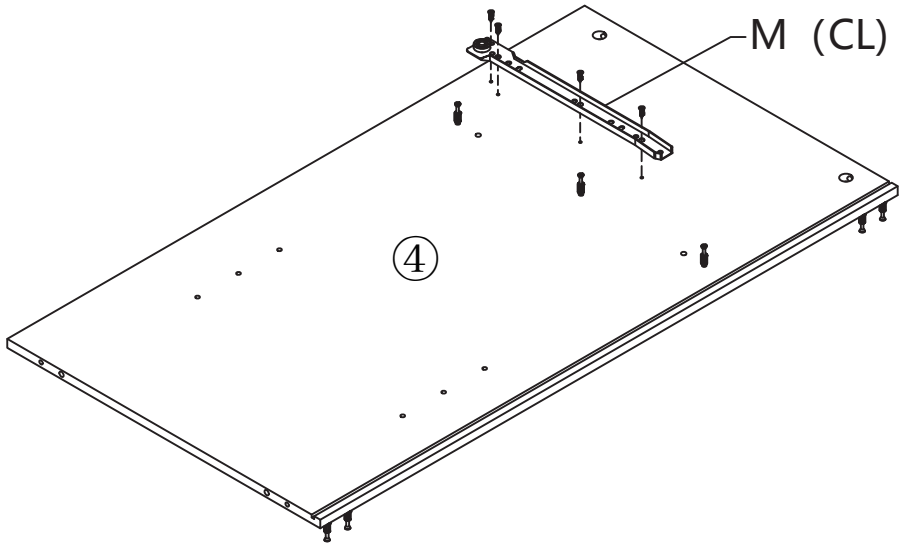

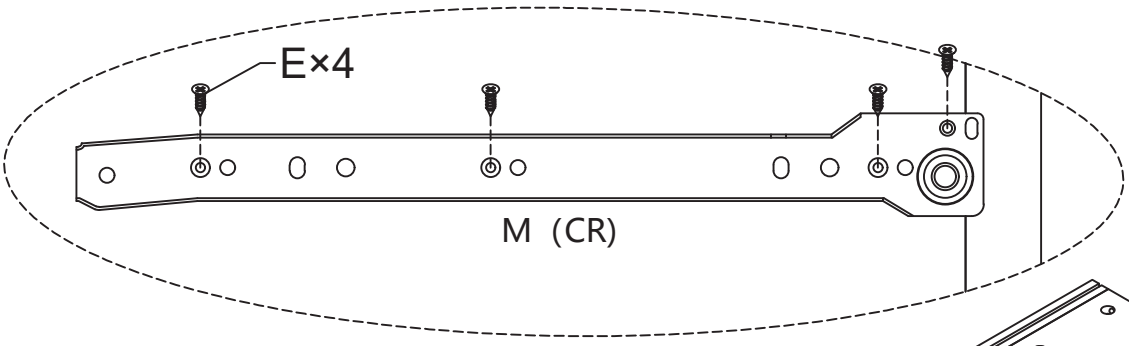

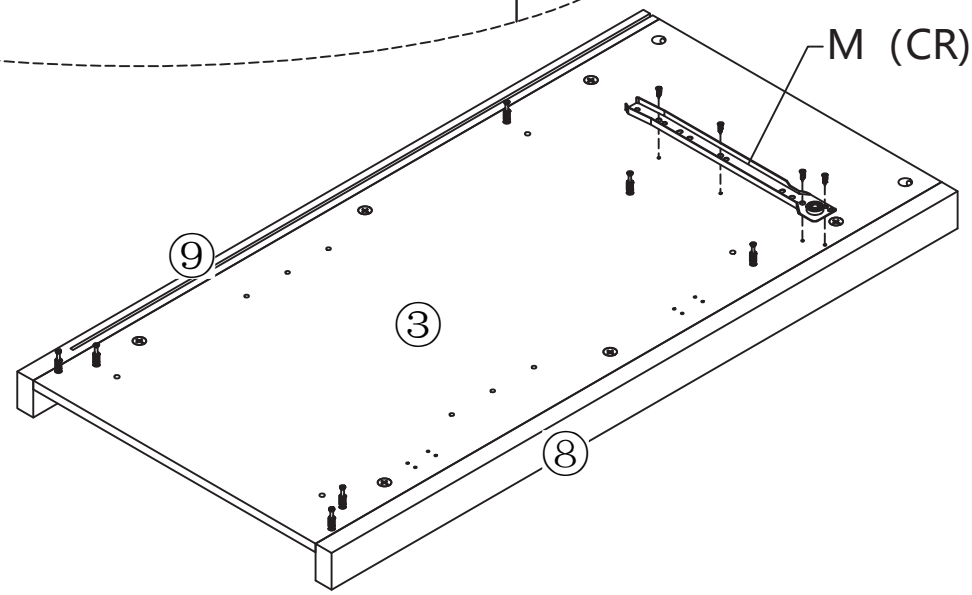

5

N×3	B×4	
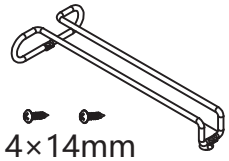 4×14mm	 ⌀15×9.5	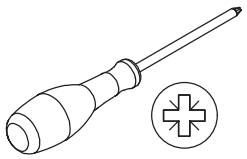

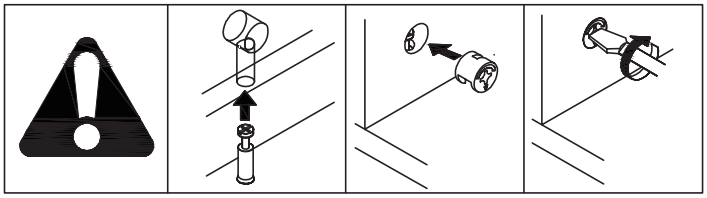

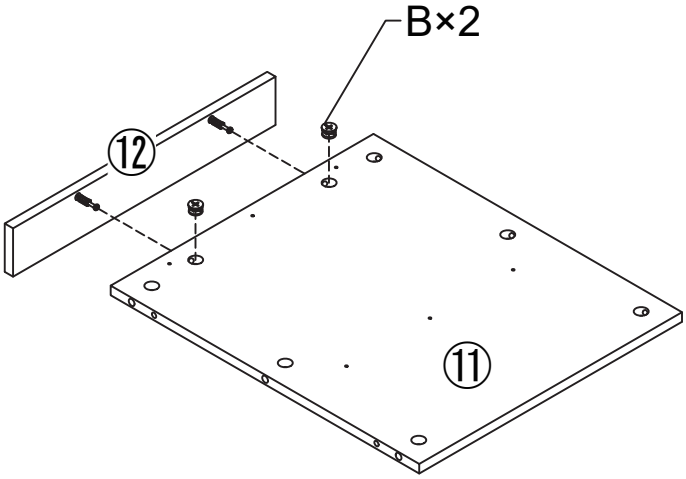

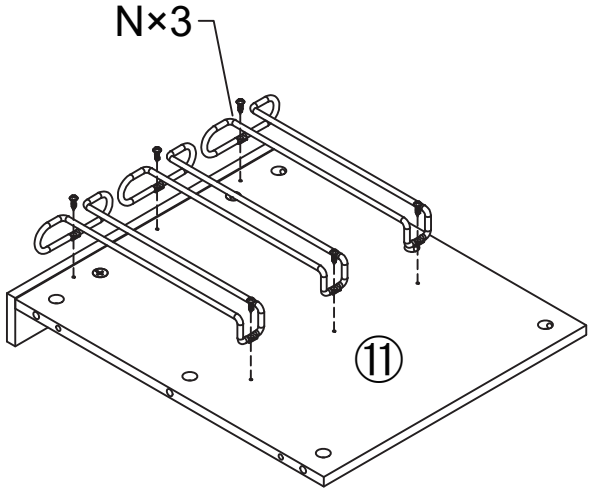

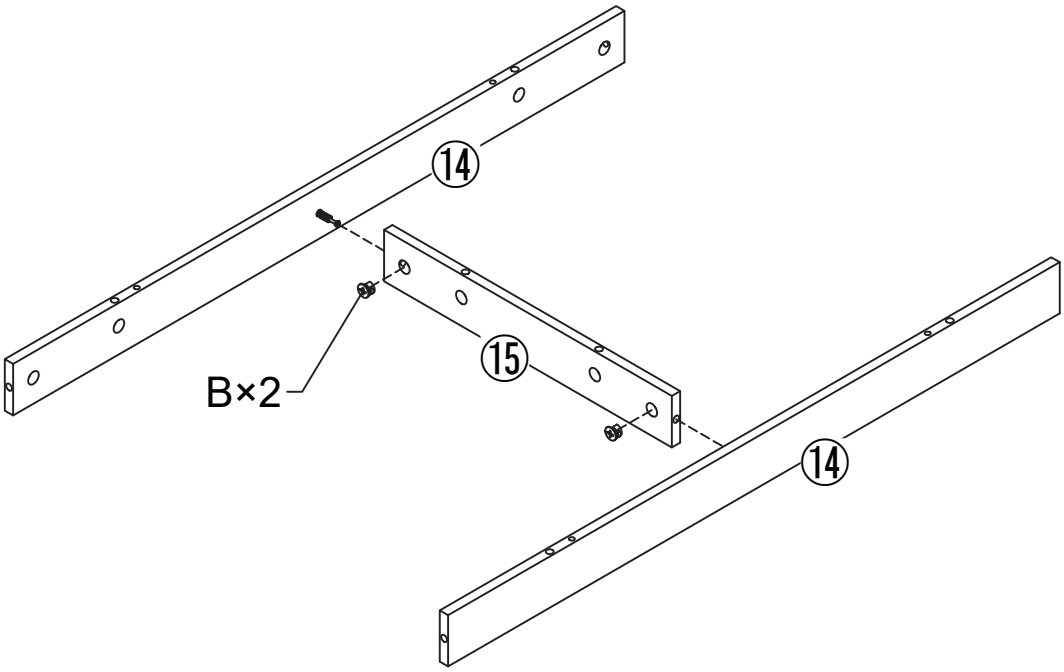

6

B×9	C×8	D×2	
 ⌀15×9.5	 ⌀6×30	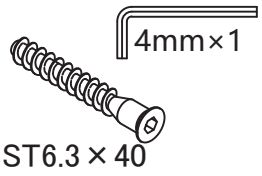 4mm×1 ST6.3×40	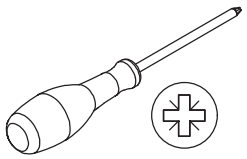

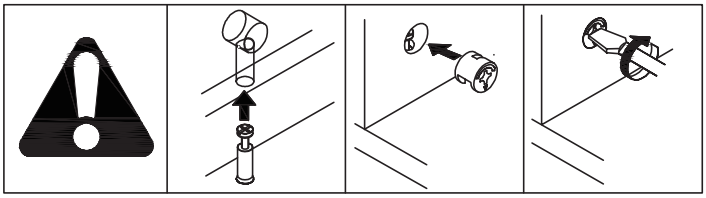

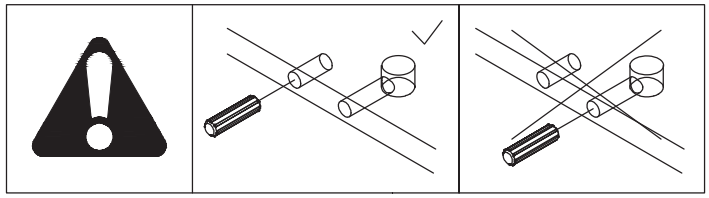

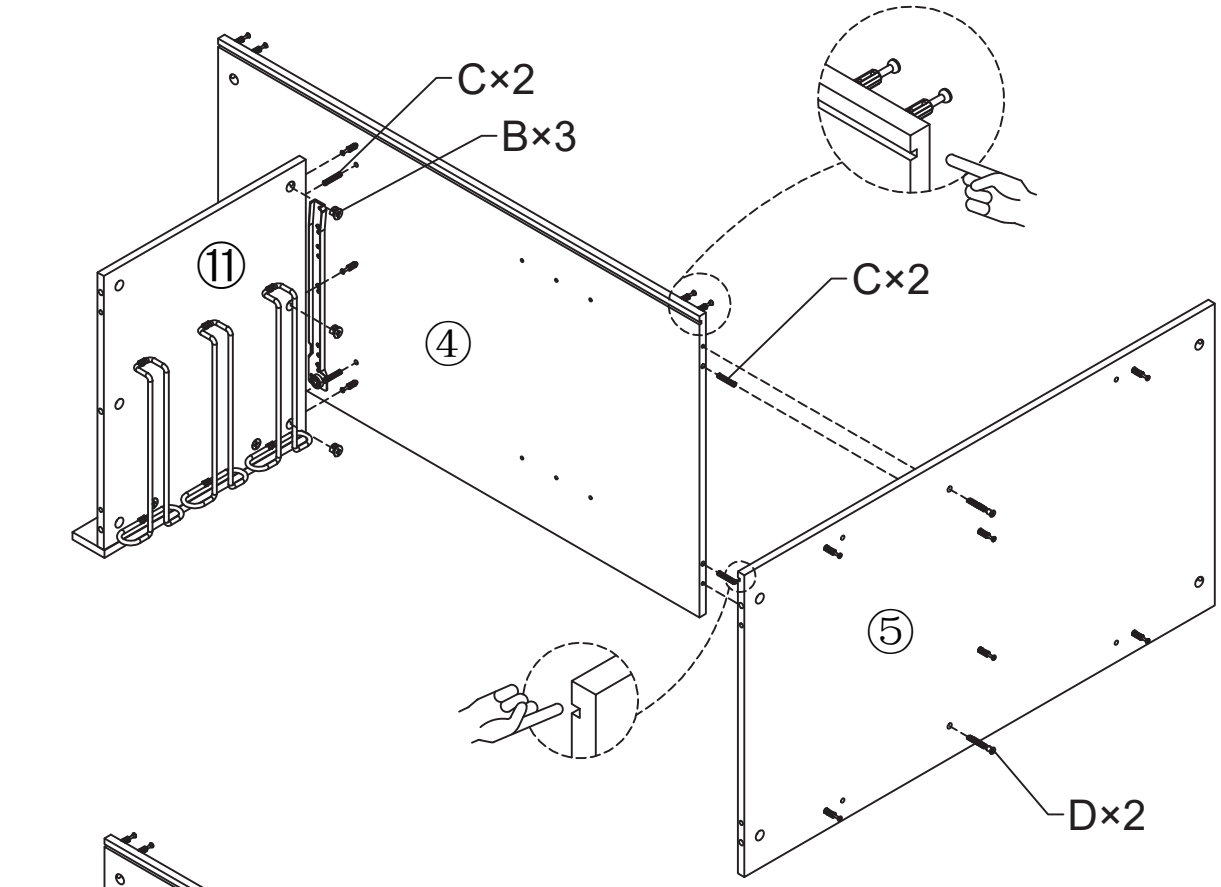

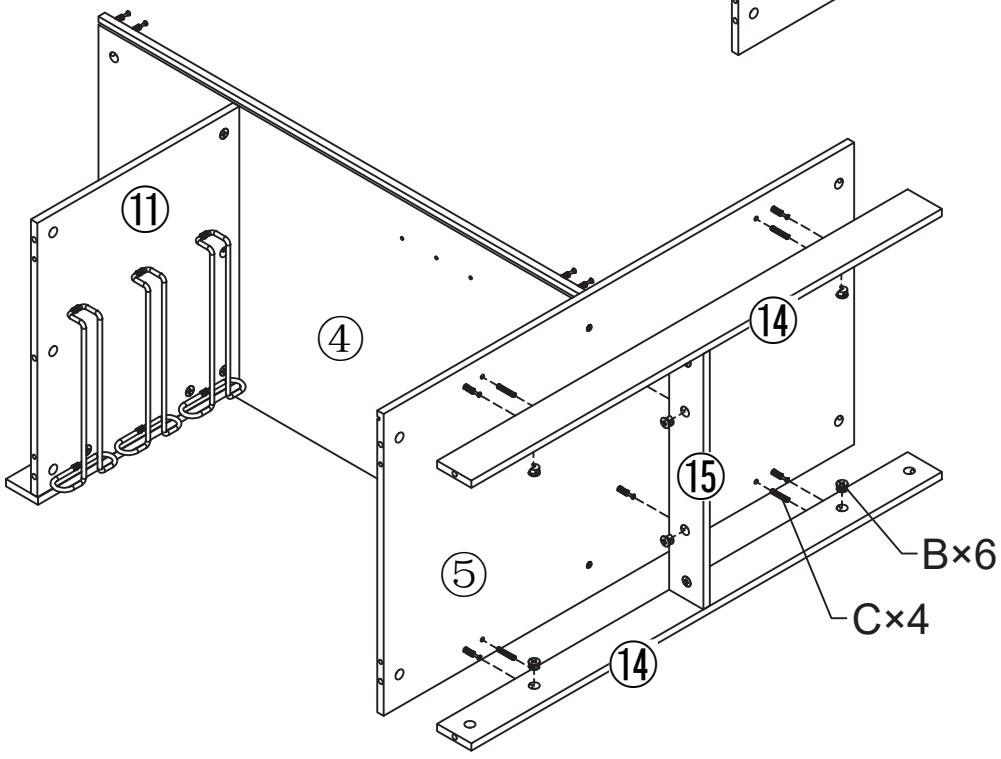

7

B×11	C×4	
 ⌀15×9.5	 ⌀6×30	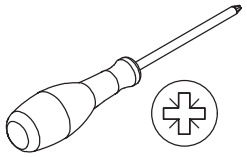

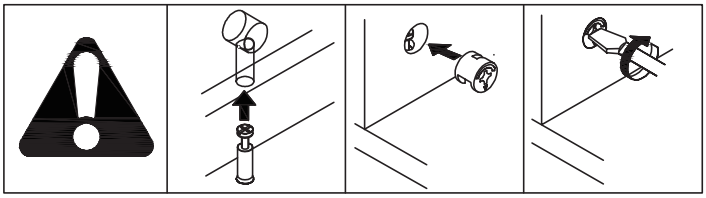

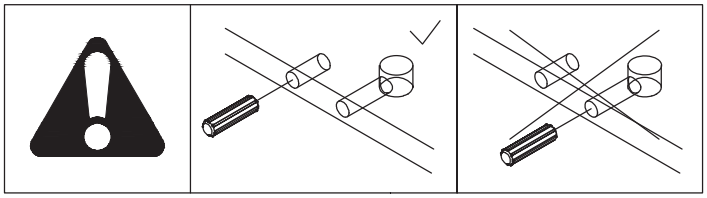

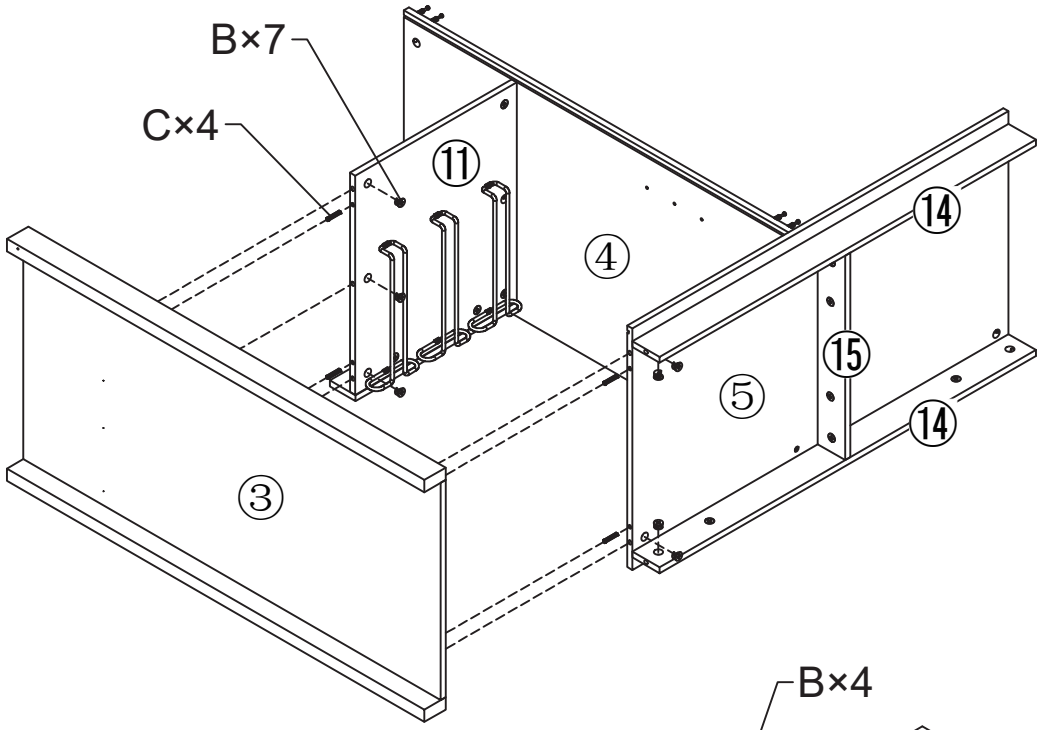

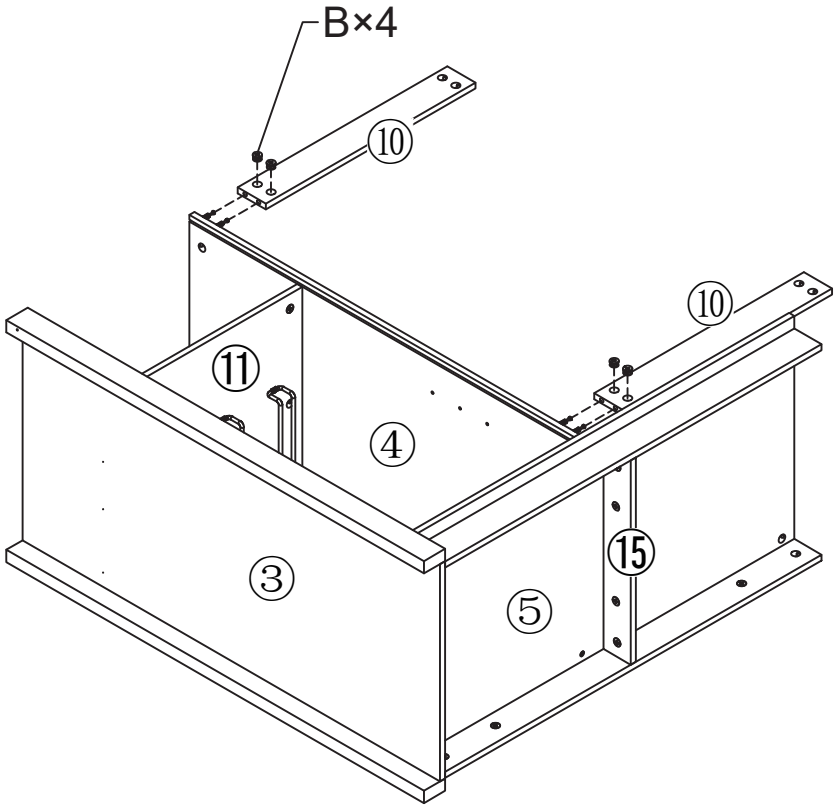

8

B×8	C×2	J×4	
 ⌀15×9.5	 ⌀6×30	 EVA	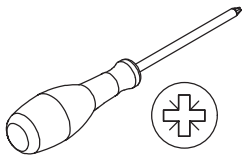

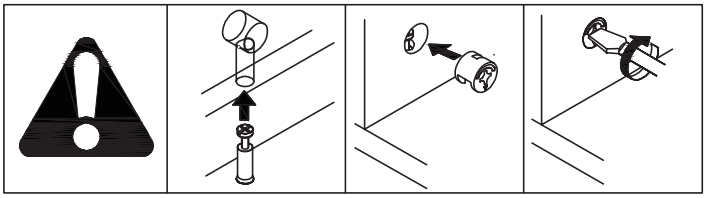

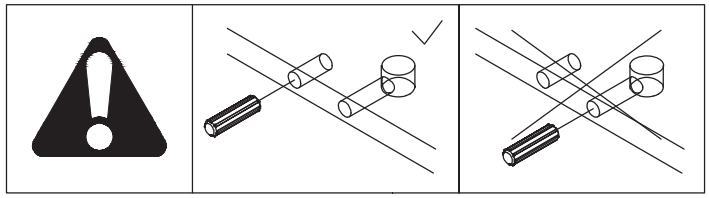

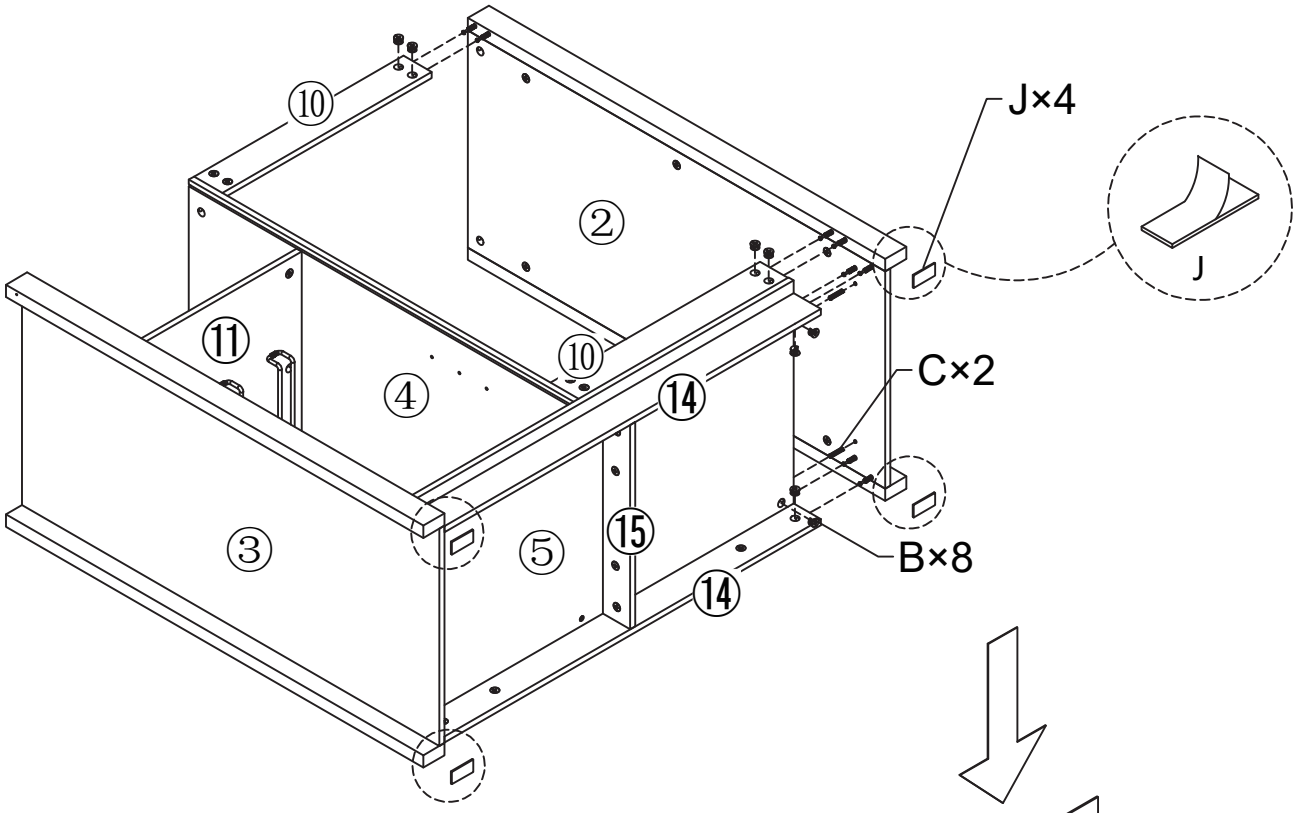

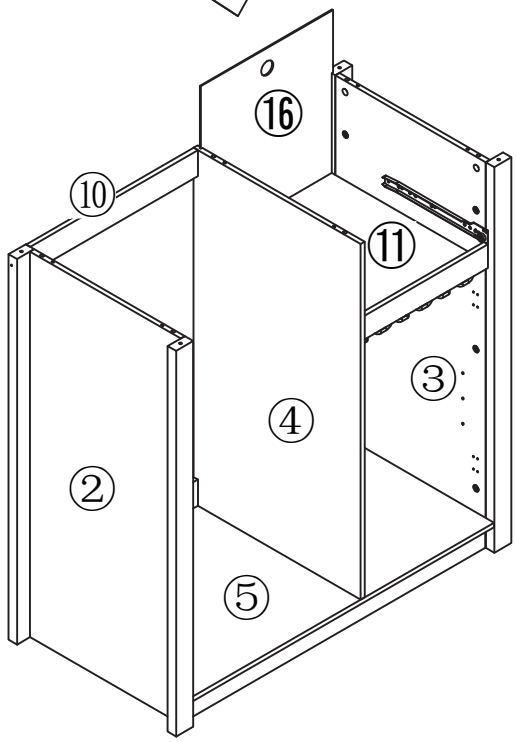

9

B×6	C×10	
 ⌀15×9.5	 ⌀6×30	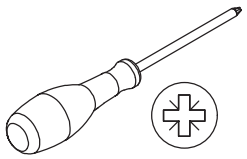

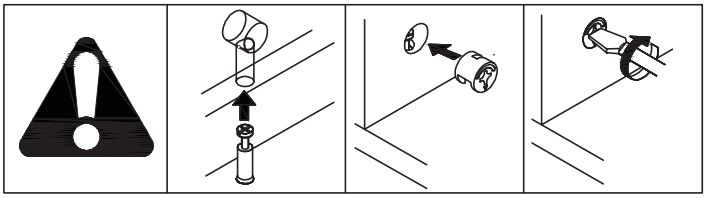

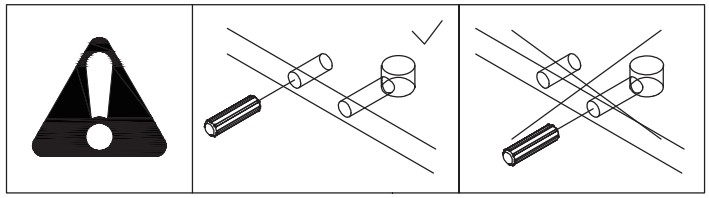

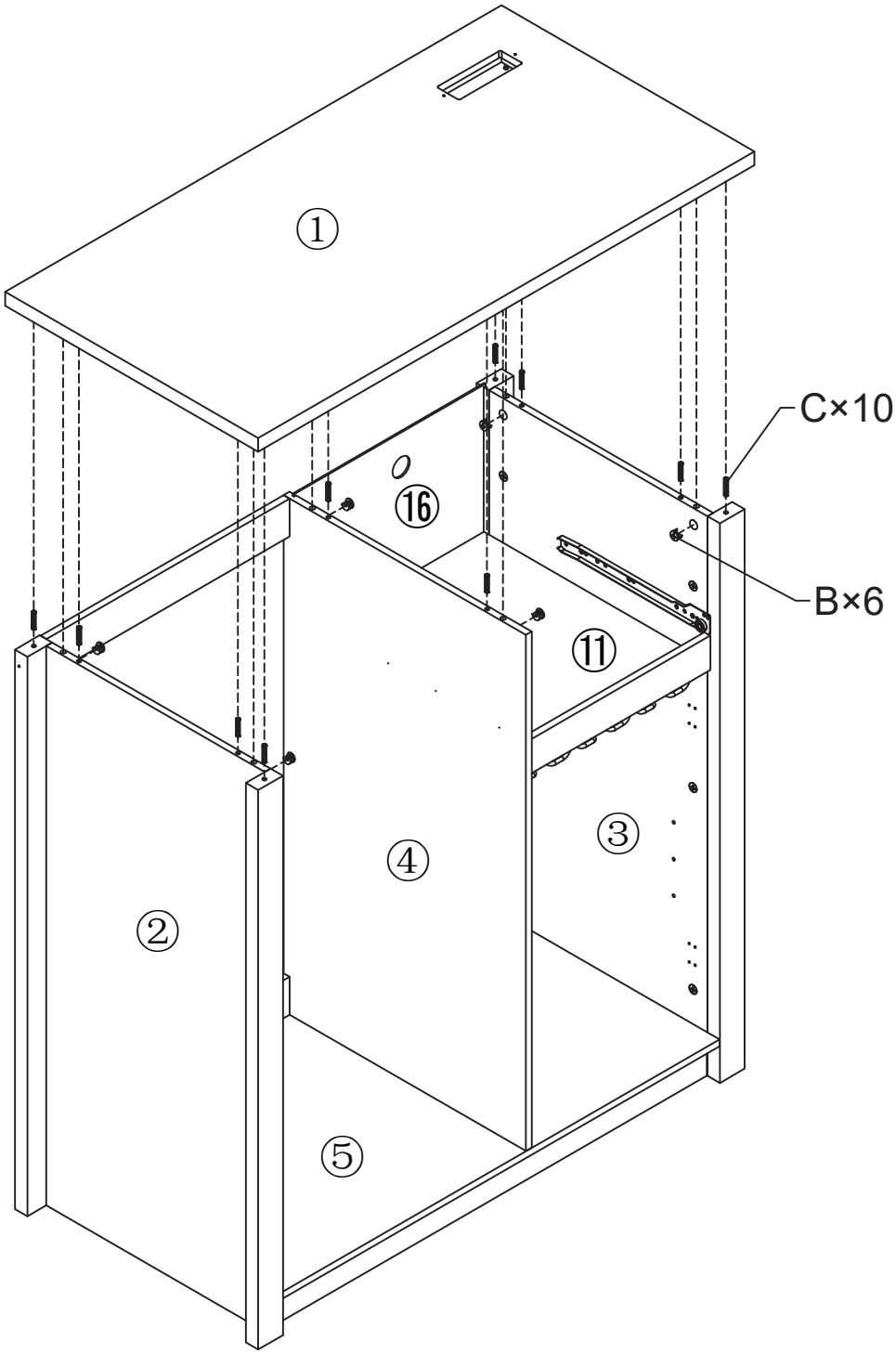

10

E×2	L×1	
 3×12	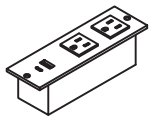	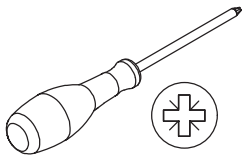

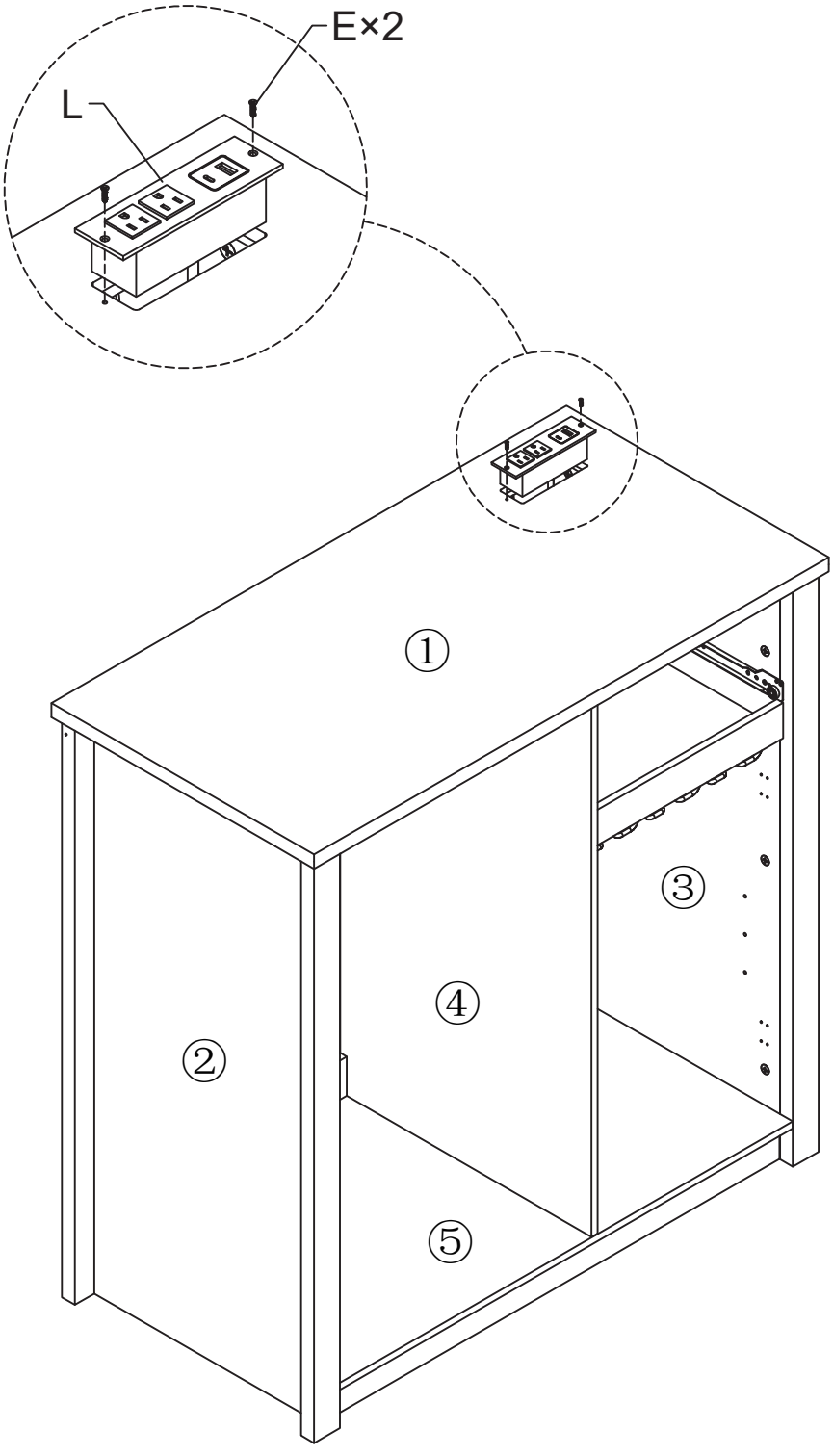

11

H×4	
	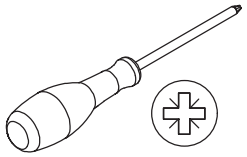

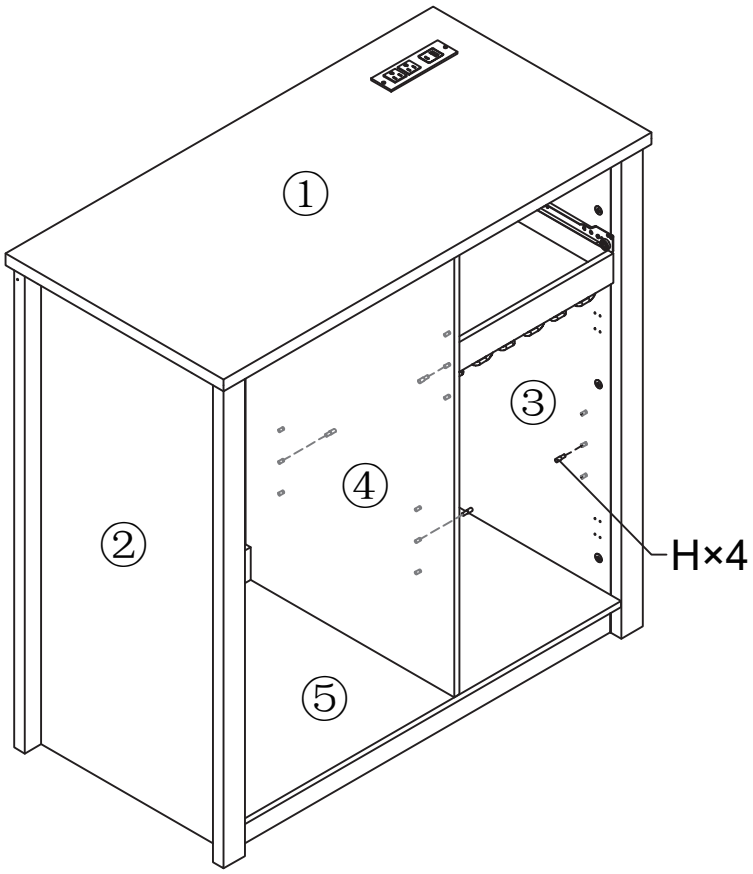

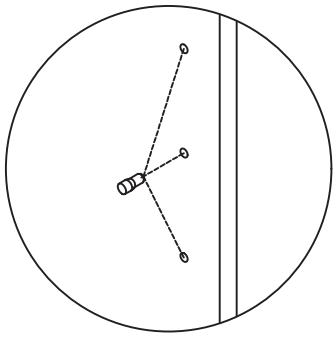

3 adjustable positioning options

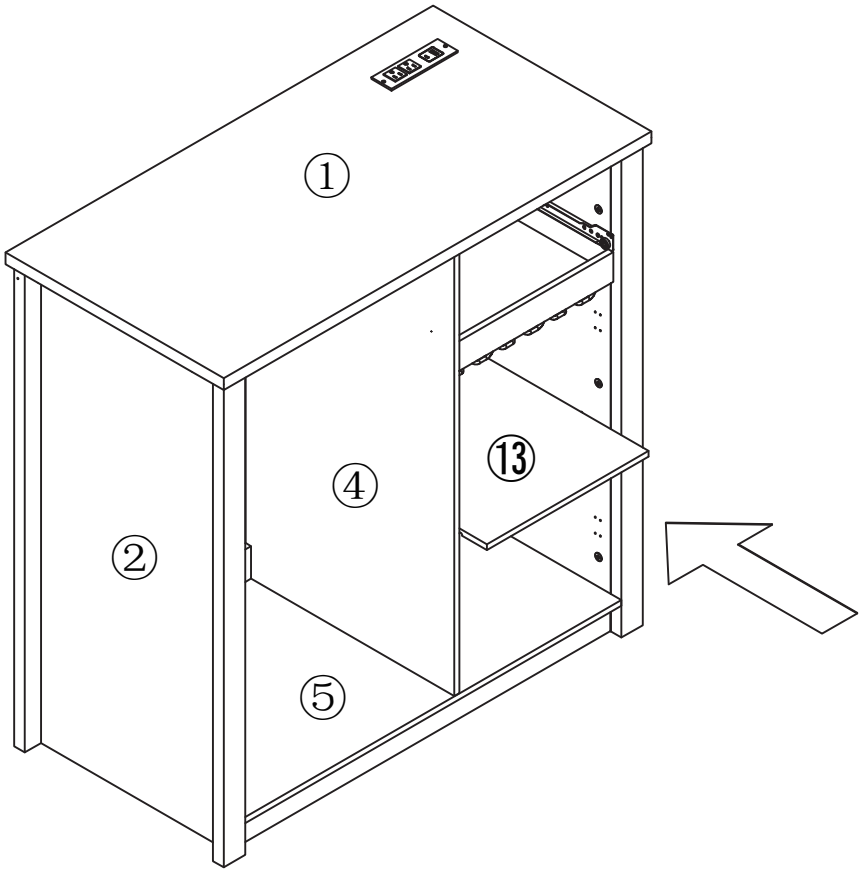

12

F×12	O×2	
 3.5×12	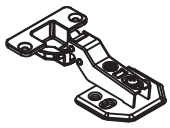	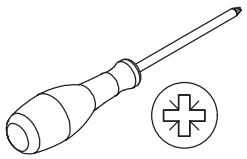

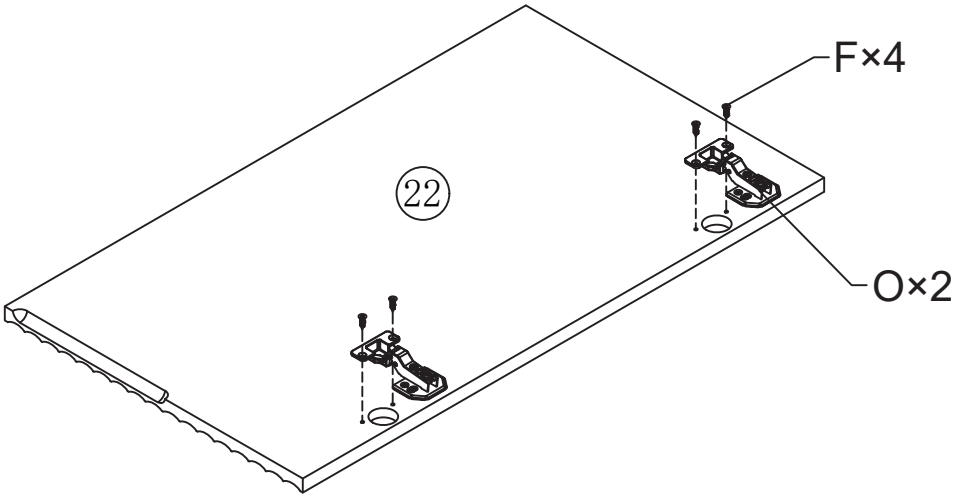

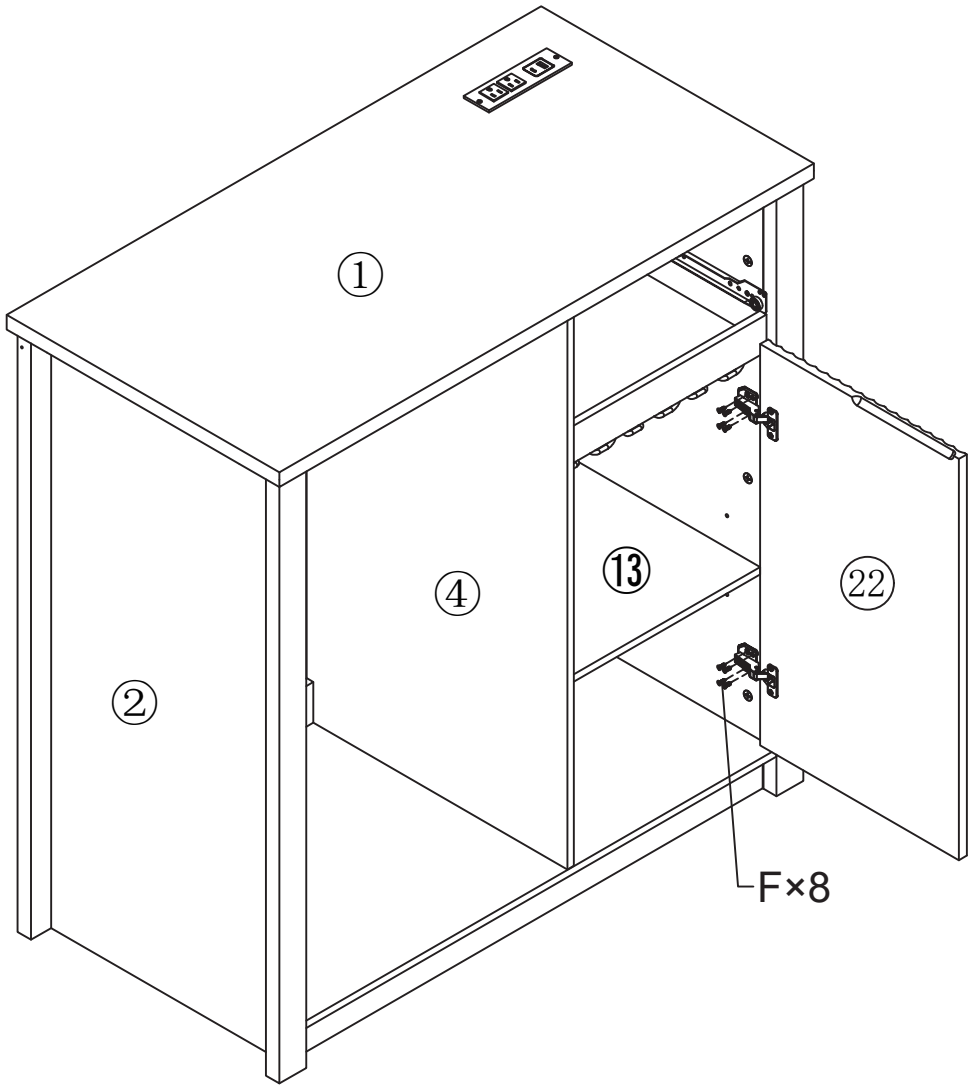

13

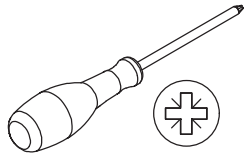

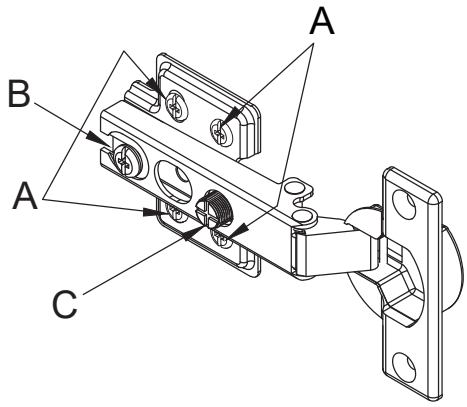

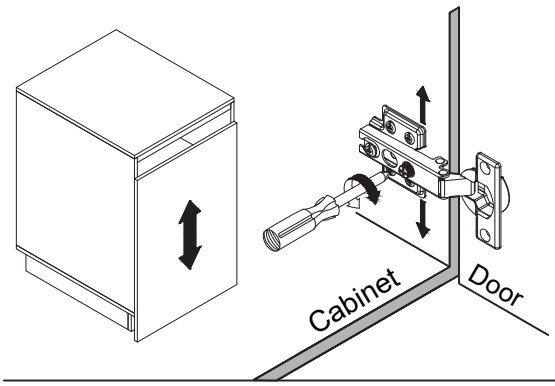

To adjust the vertical height.
Loosen the four screws "A" on both hinges. Two of them are usually in slotted holes which allows you to adjust up or down by a few mm. Then tighten back up.

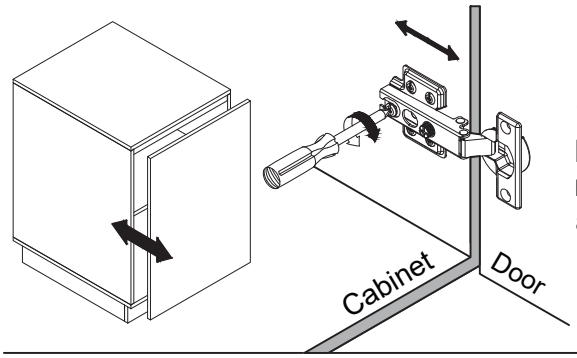

To adjust depth.
Loosen screw "B" and adjust door, if the door can not be adjusted, please loosen screw "C", then try again. Tighten screw "B" and "C".

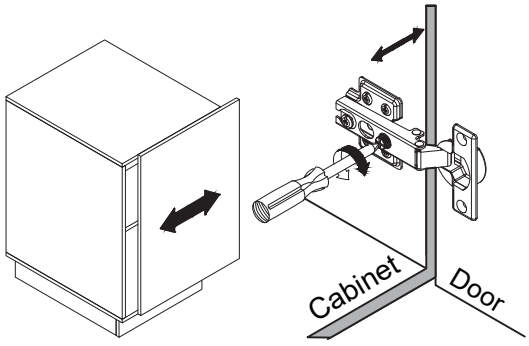

To adjust side ways.
Turning the screw "C" on BOTH hinges on each door.

14

A×4	G×4	
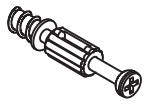 6×35mm	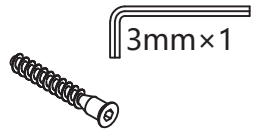 3mm×1 ST5×35	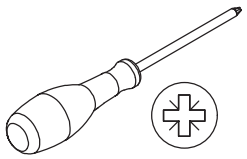

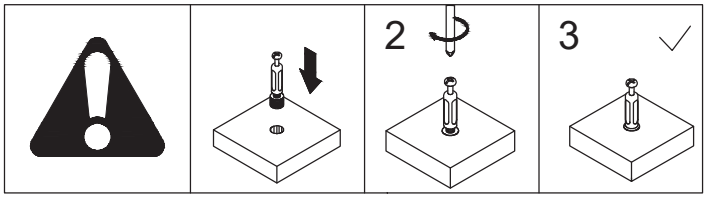

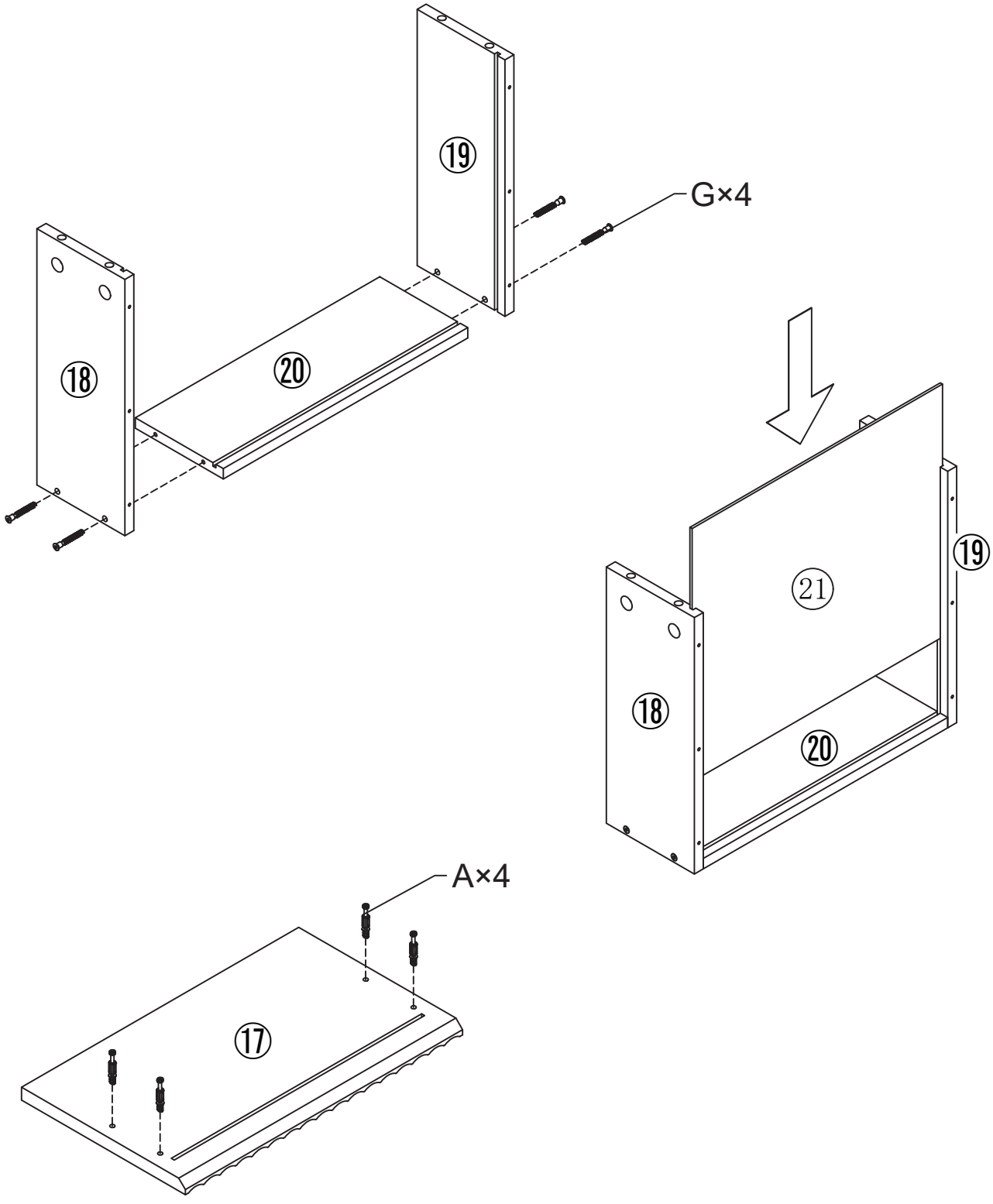

15

B×4	E×6	M (DL) ×1	M (DR) ×1	
 ⌀15×9.5	 3×12	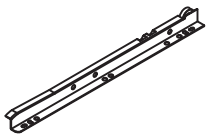		

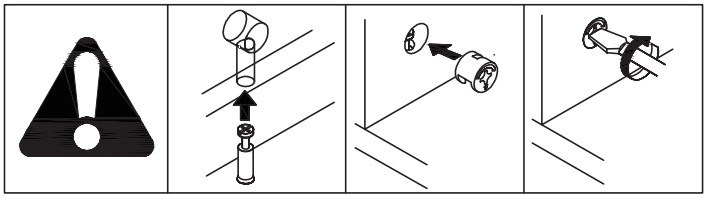

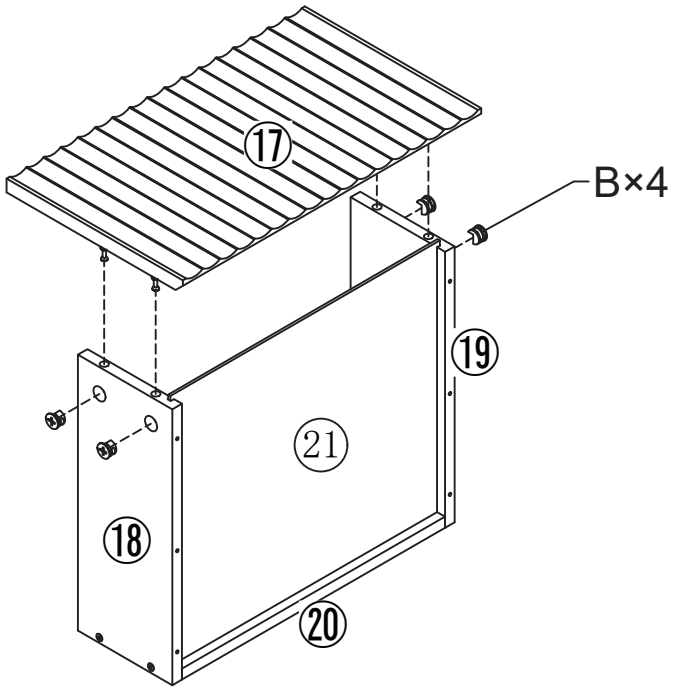

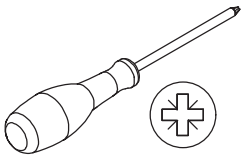

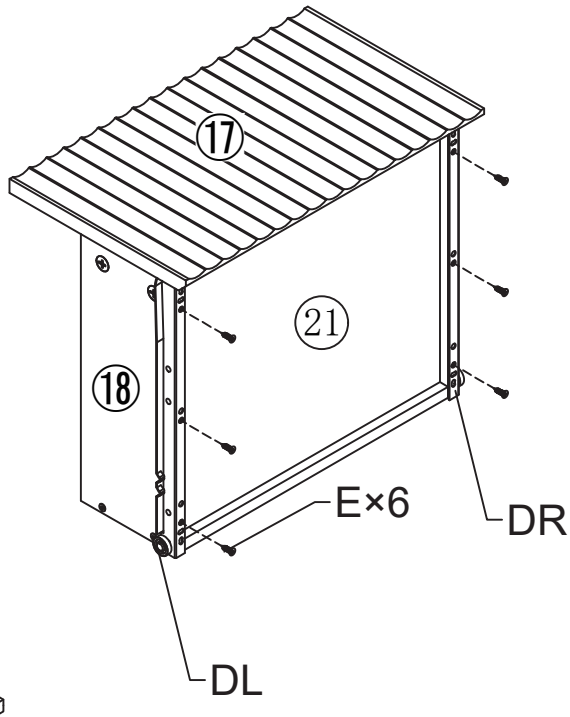

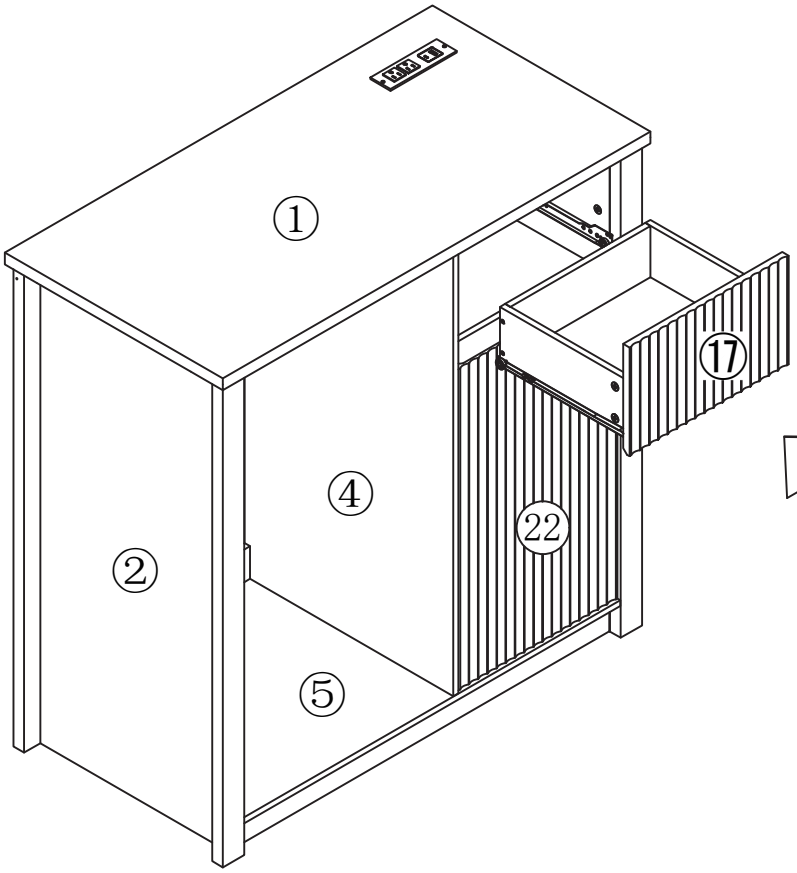

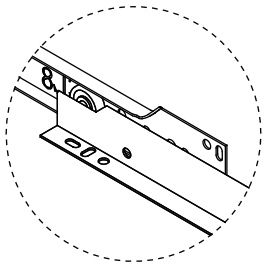

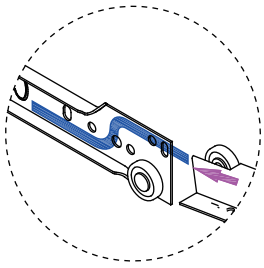

16

E	I×54	
×8 3×12 ×8		

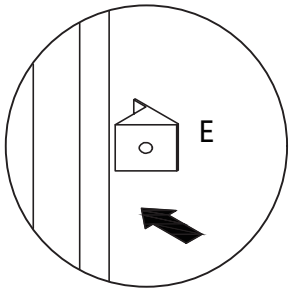



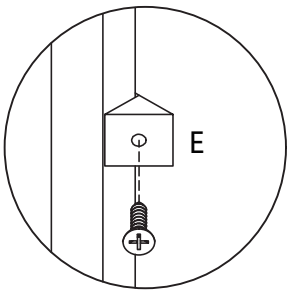

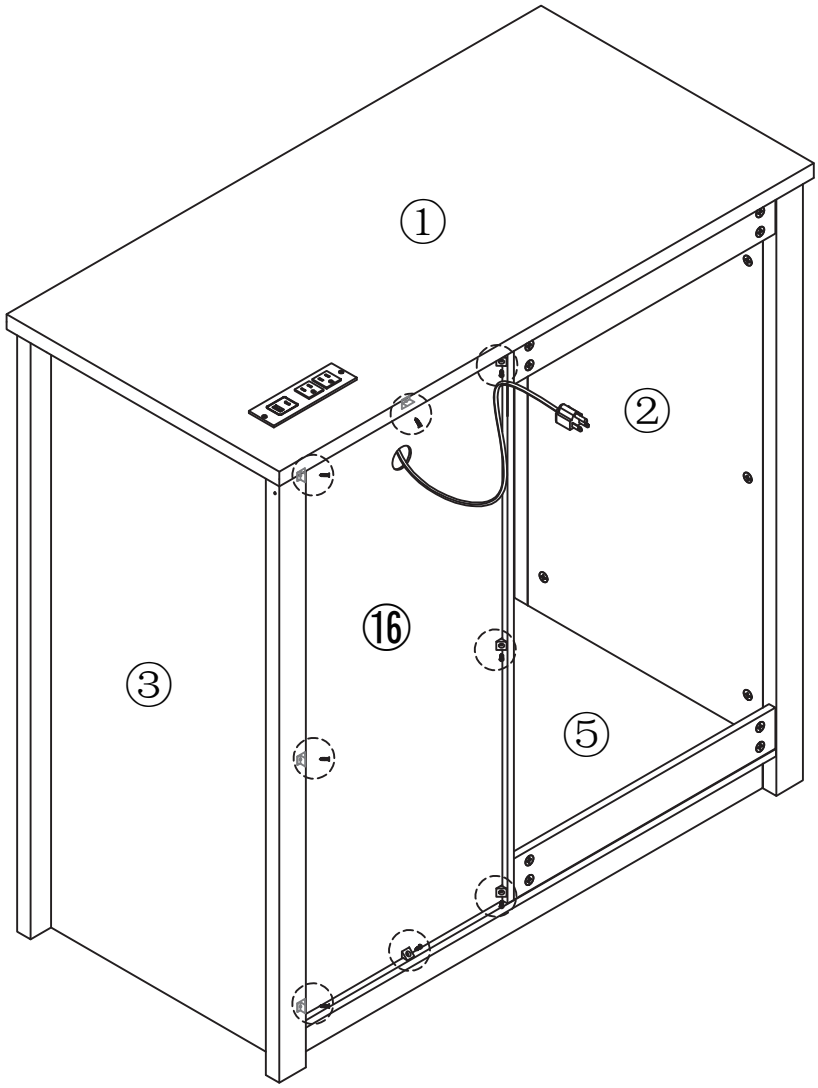

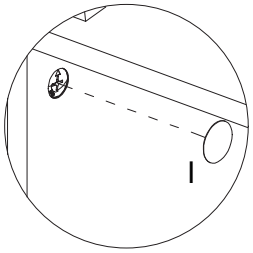

Stick the exposed holes of the cabinet body with hole stickers.

17

K×2	
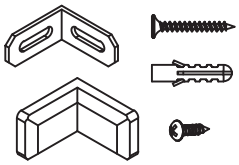	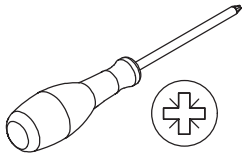

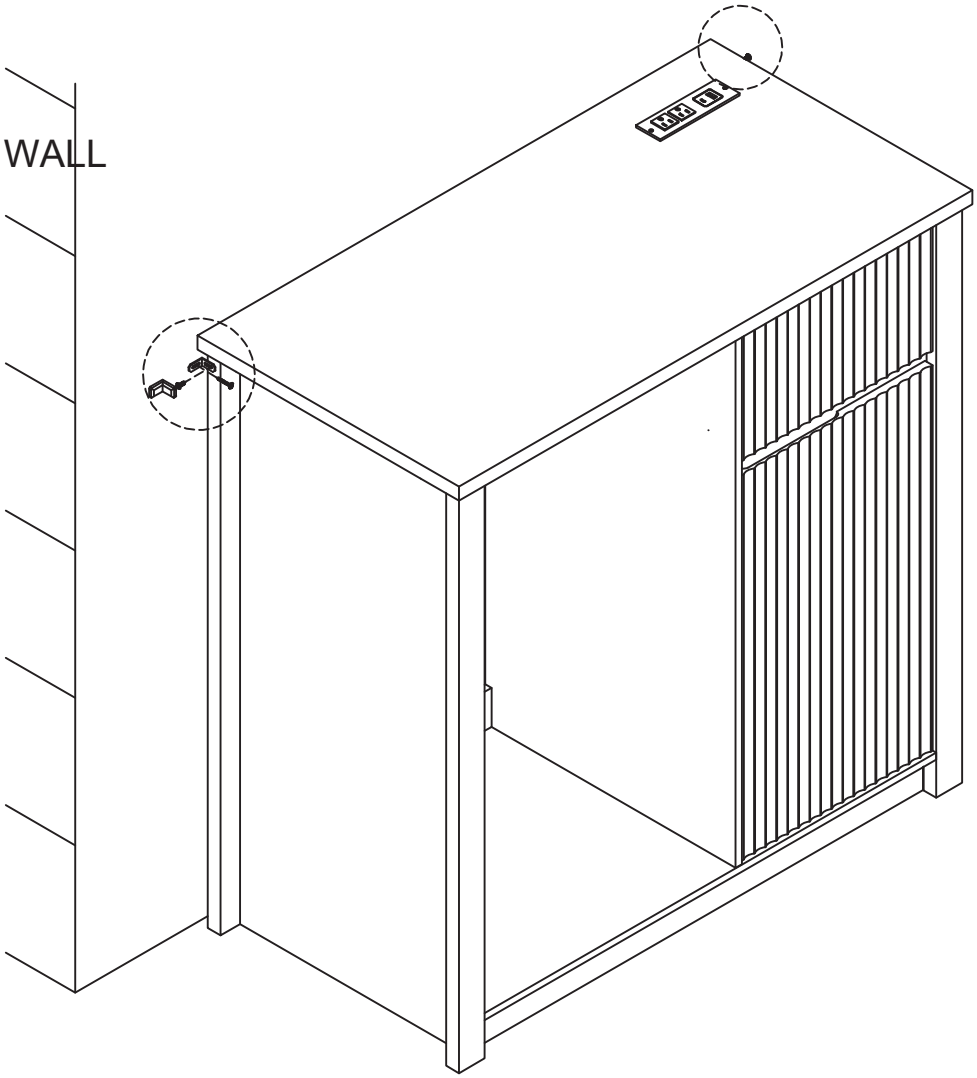

1.Put the cabinet against the wall and mark the hole locked against the wall with a marker.
2.Use an electric drill to drill 2 holes with a diameter of Ø 6 and a depth of 45mm at the marked location.
3.Place anchors into the hole.

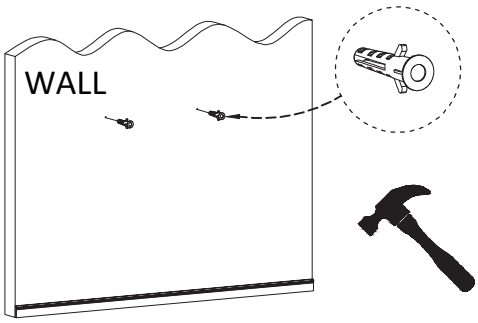

4.Push the shelf close to the wall, align it with the holes, and then tighten it with screws.

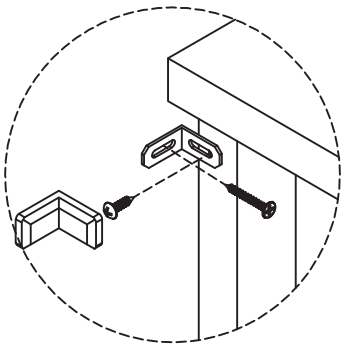

18

J×2	
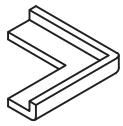	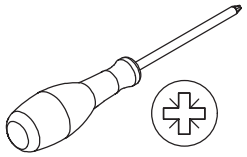

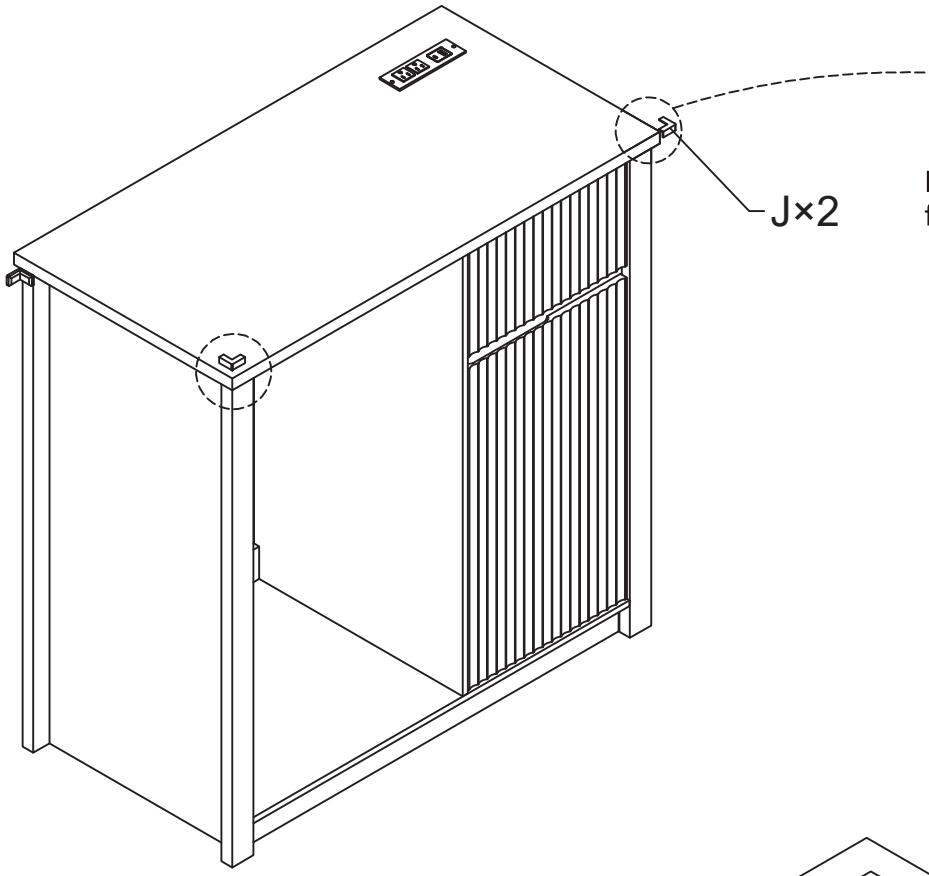

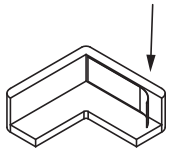

Peel off the protective film first and stick it well.

