# Installation & Assembly

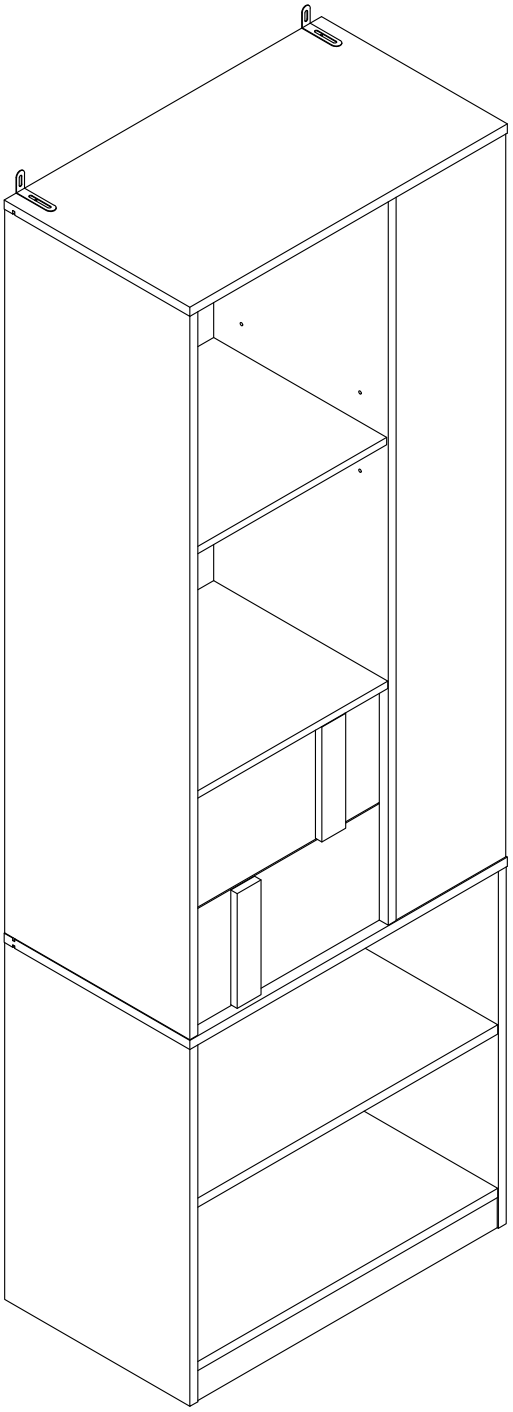

# General Guidelines

- Please read the following instruction carefully and use the product accordingly.
- Please keep this manual and hand it over when you transfer the product.
- Please check that you have all the listed components and tools, before you start assembling the item.
- Assemble the item as close to its final position(in the same room) as possible.

# Care and Maintenance

- The product is intended for indoor use only. The product must be assembled and used in accordance
- with the provisions of the manual.
- Avoid long-term exposure to humid environments to prevent mildew.
- Keep the product away from fire sources and high temperatures. Do not expose the product to direct sunlight.
- Do not place any hot objects on the surface of the product.

# Warning ⚠

- Keep children and animals away from the work area, small parts could choke if swallowed.
- Children are not allowed to climb or stand on the product to avoid personal injury caused by the product tilting or tipping over.
- Please do not use the product if there is/are defective and/or missing part/s, as this can result in damage or injury.
- To avoid the potential dangers of suffocation, please keep all parts and packaging (film, plastic bags, foam, etc.) away from babies and children.

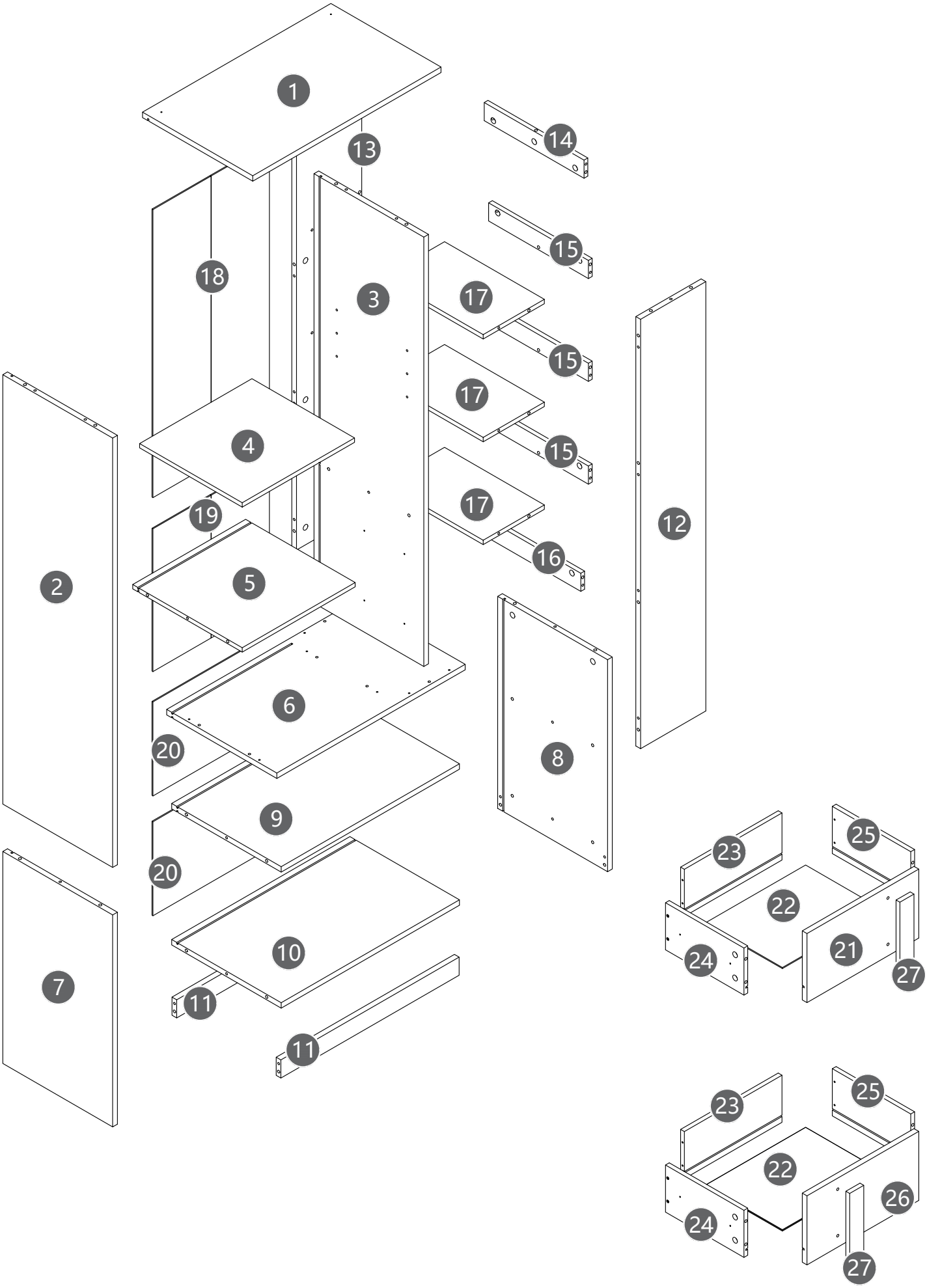
1
13
14
15
18
3
17
15
17
4
15
17
19
12
16
2
5
6
8
20
9
20
23
25
22
10
21
24
27
7
11
11
23
25
22
26
24
27

| | | | | |
|---|---|---|---|---|
| 1<br>600*351(mm)<br>1PC | 2<br>1185*350(mm)<br>1PC | 3<br>1185*350(mm)<br>1PC | 4<br>358*327(mm)<br>1PC | 5<br>360*349(mm)<br>1PC |
| 6<br>600*351(mm)<br>1PC | 7<br>585*350(mm)<br>1PC | 8<br>585*350(mm)<br>1PC | 9<br>568*349(mm)<br>1PC | 10<br>568*349(mm)<br>1PC |
| 11<br>568*50(mm)<br>2PCS | 12<br>1185*208(mm)<br>1PC | 13<br>1185*208(mm)<br>1PC | 14<br>318*50(mm)<br>1PC | 15<br>318*50(mm)<br>3PCS |
| 16<br>318*50(mm)<br>1PC | 17<br>318*195(mm)<br>3PCS | 18<br>795*370(mm)<br>1PC | 19<br>394*370(mm)<br>1PC | 20<br>579*259.5(mm)<br>2PCS |
| 21<br>190.5*356(mm)<br>1PC | 22<br>320*246(mm)<br>2PCS | 23<br>311*130(mm)<br>2PCS | 24<br>250*130(mm)<br>2PCS | 25<br>250*130(mm)<br>2PCS |
| 26<br>190.5*356(mm)<br>1PC | 27<br>188*45(mm)<br>2PCS | | | |

| | | | |
|---|---|---|---|
| A 64x<br>M6x35mm | B 64x<br>15x10 | C 48x<br>M6x30mm | D 8x<br>M7x50mm |
| E 8x<br>M3.5x14mm | F 18x<br>M3x12mm | G 48x | H 4x<br>250mm |
| I 8x<br>M3.5x12mm | J 4x | K 4x<br>M6x20mm | L 2x |
| M 8x<br>M3.5x30mm | | | |

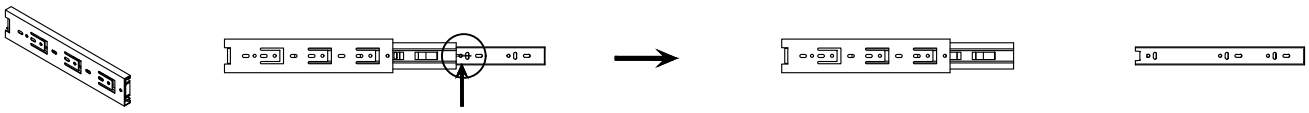

H*4 H1*4 H2*4

Hardware installation demonstration

NOTE:Please make sure "A"hardware tightened and can't be pulled out!

I

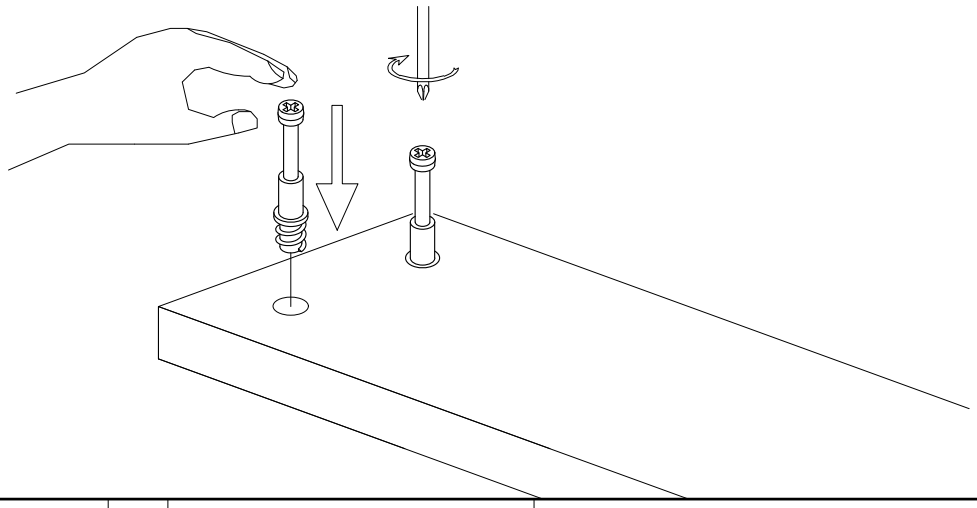

II

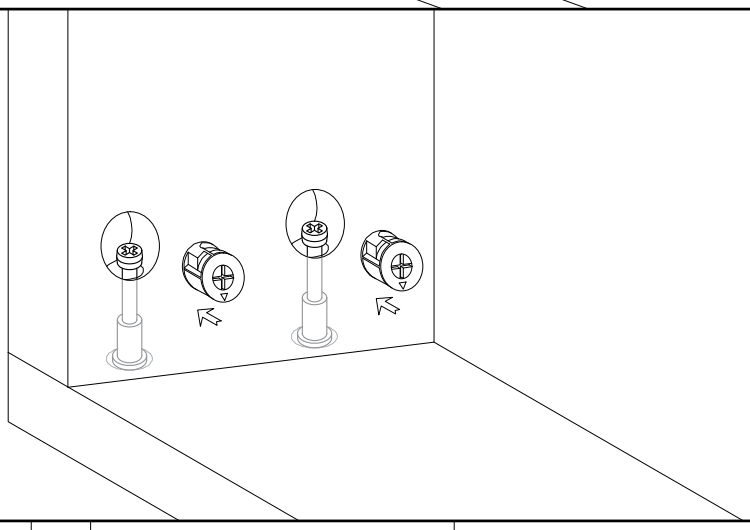

III

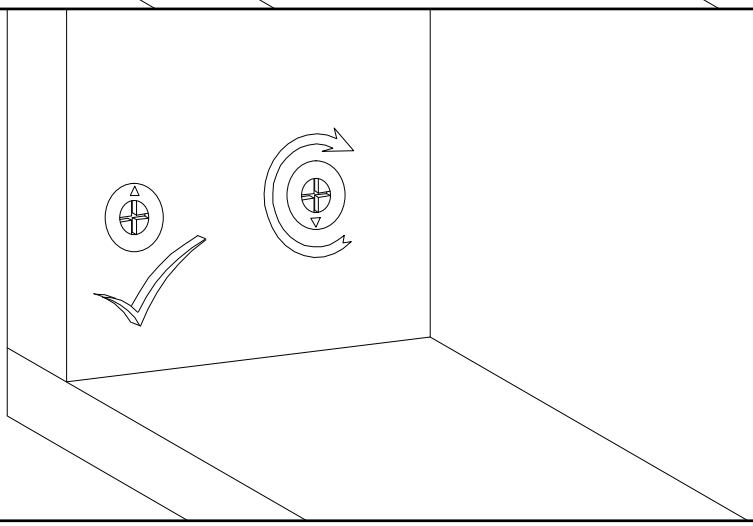

# 01

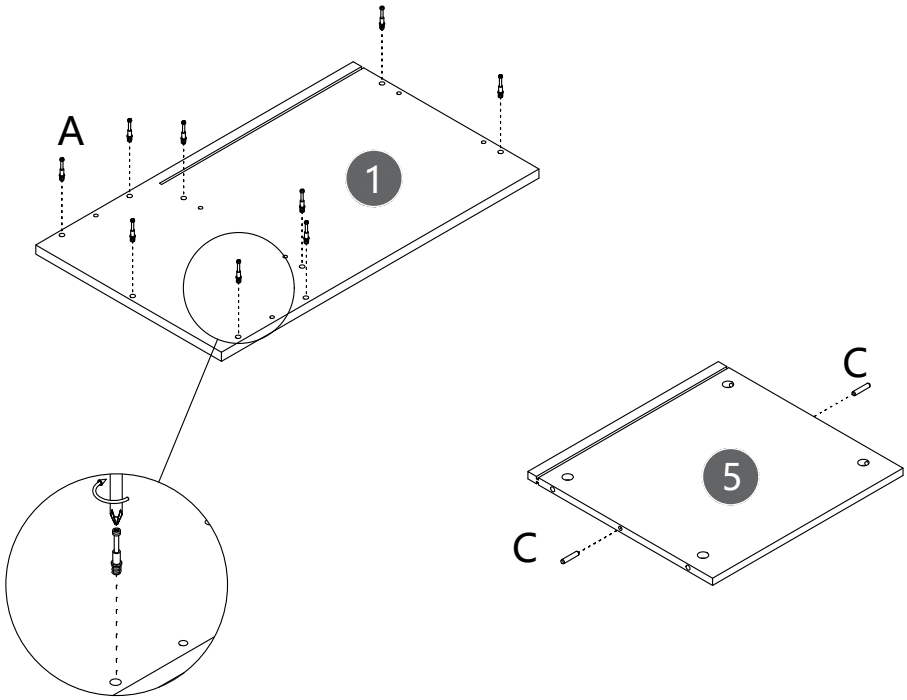


A 9x

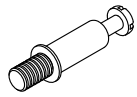

C 2x

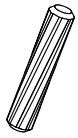

# 02

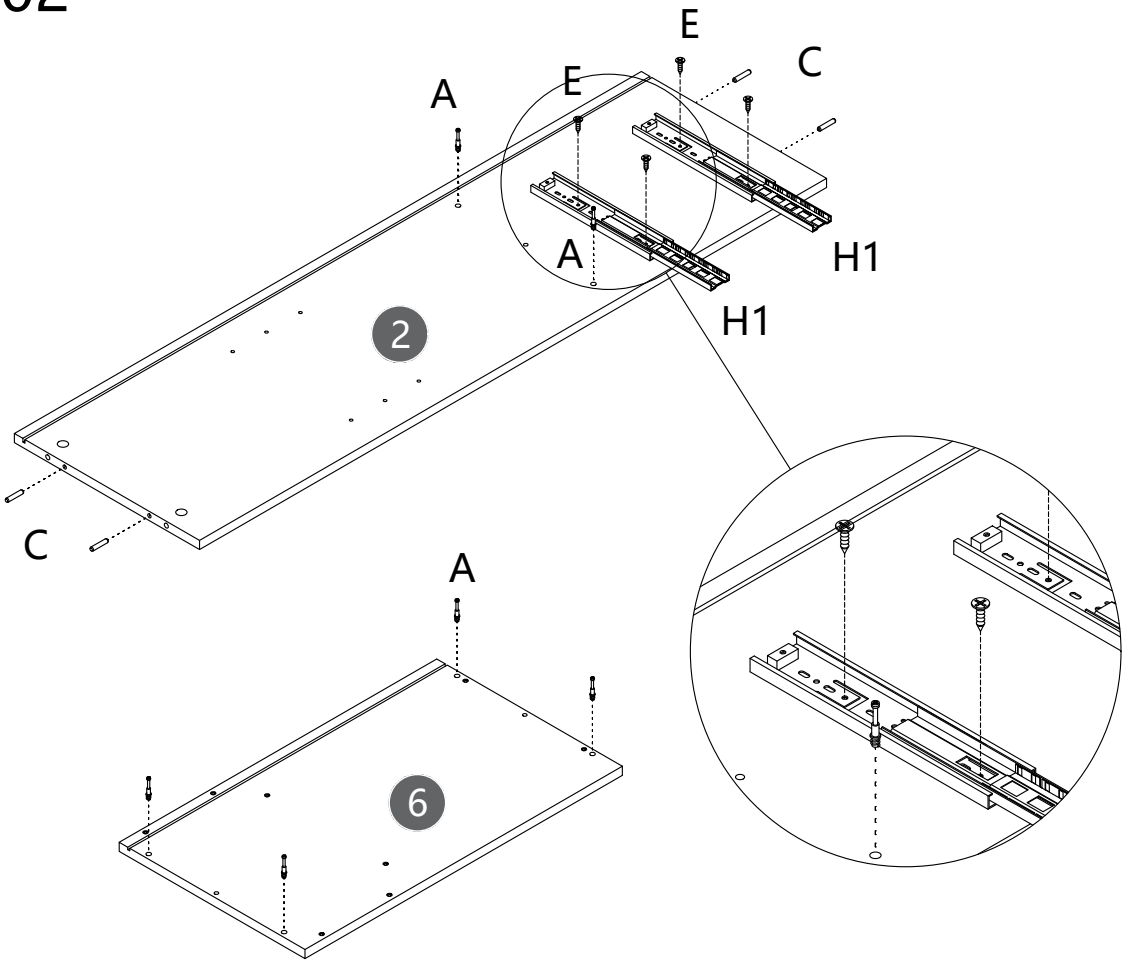


E 4x

H1 2x

A 6x

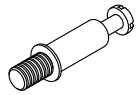

C 4x

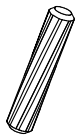

# 03

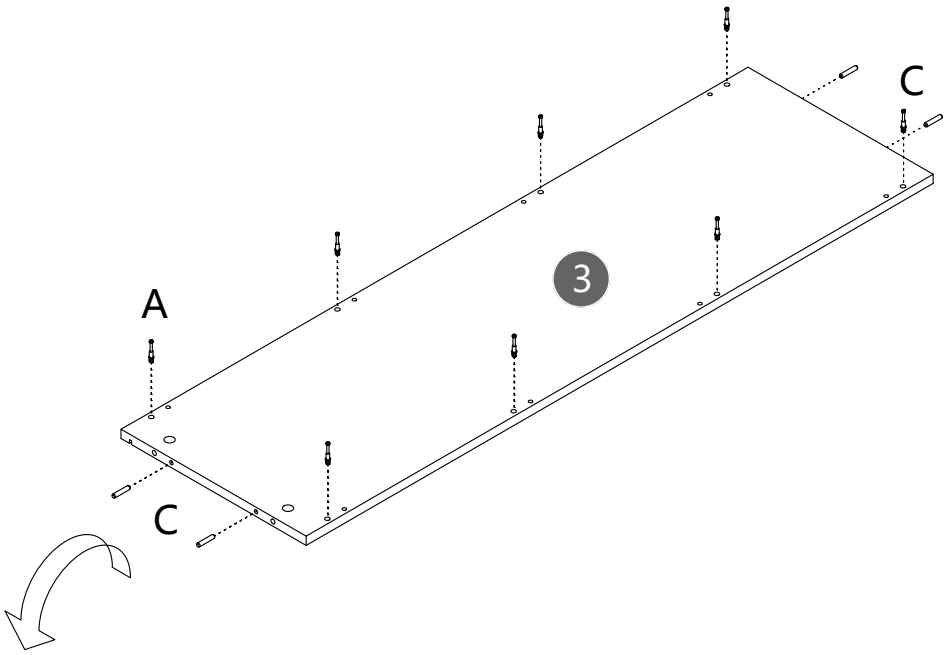


A 8x

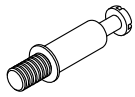

C 4x

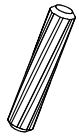

# 04

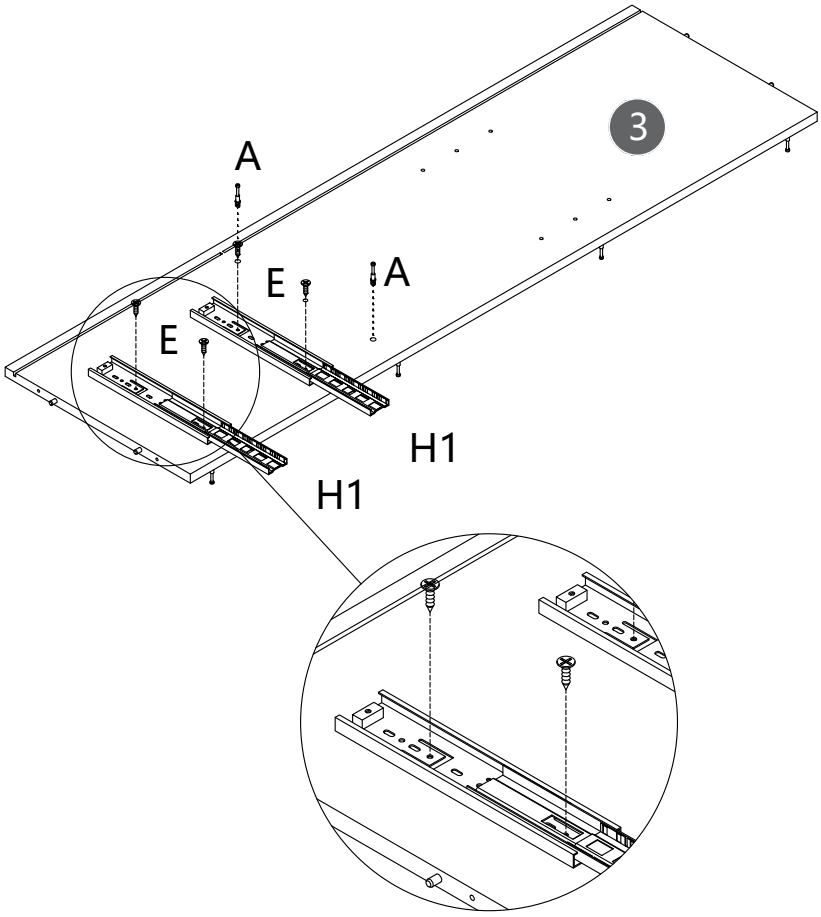


E 4x

H1 2x

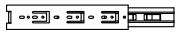

A 2x

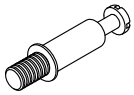

## 05

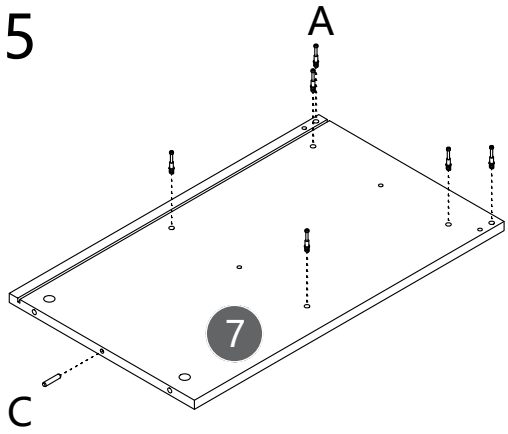


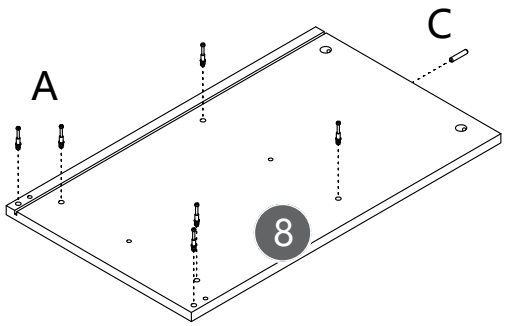


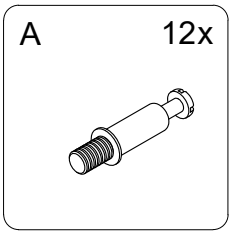


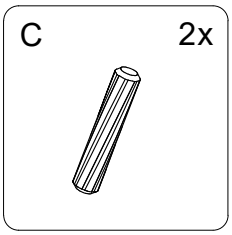


## 06

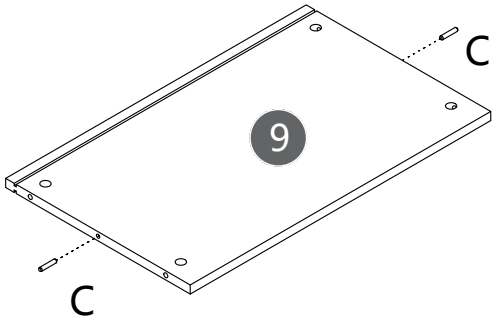


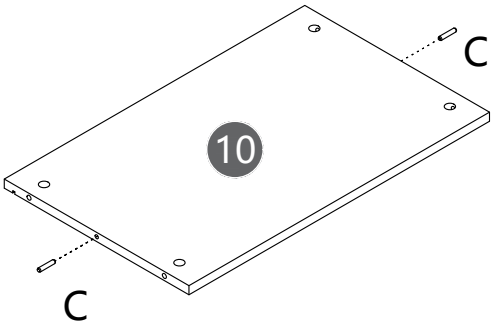


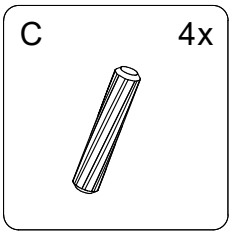

## 07

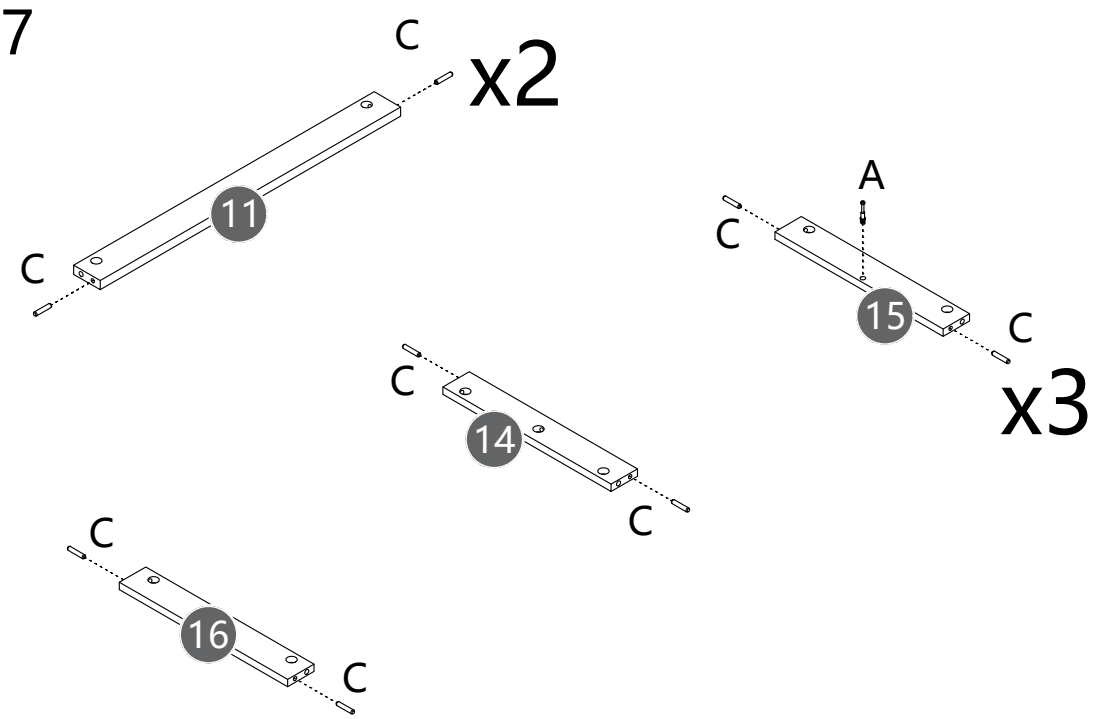


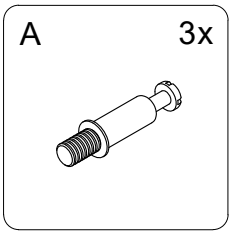


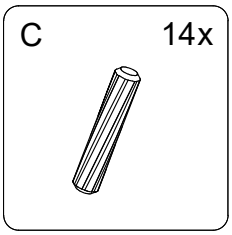


## 08

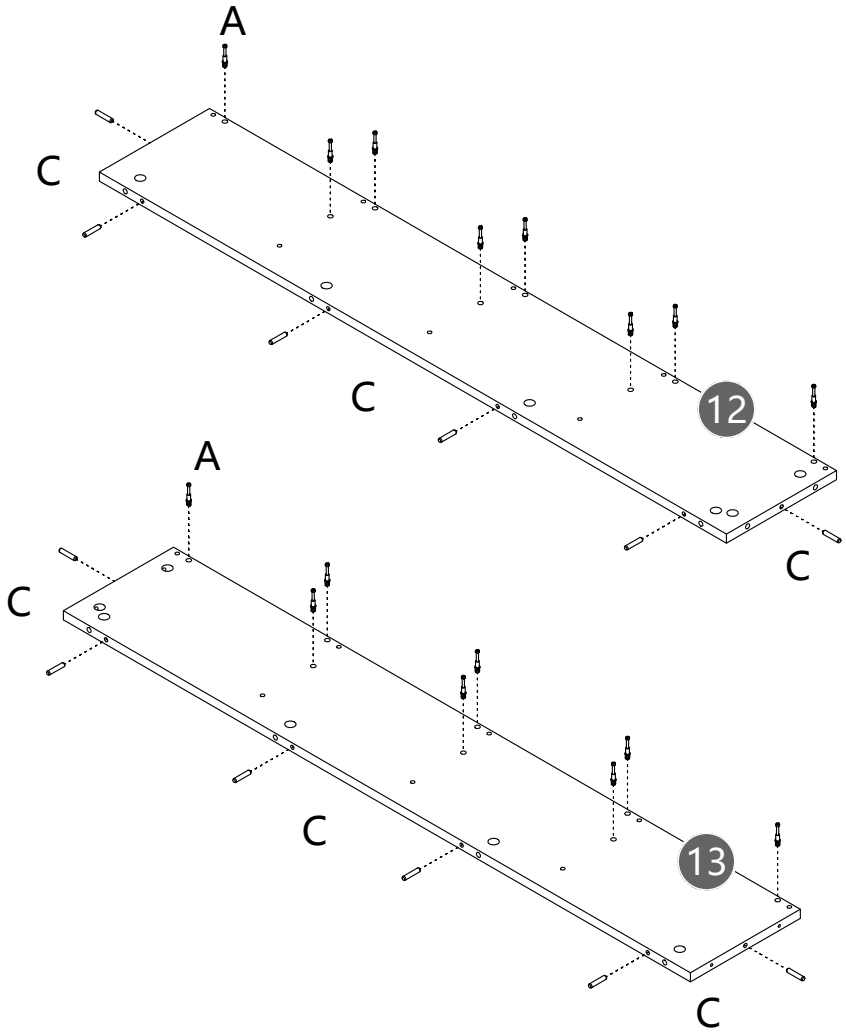


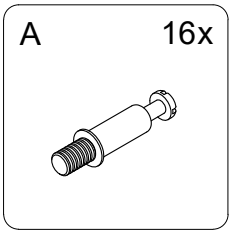


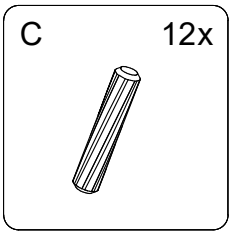

## 09

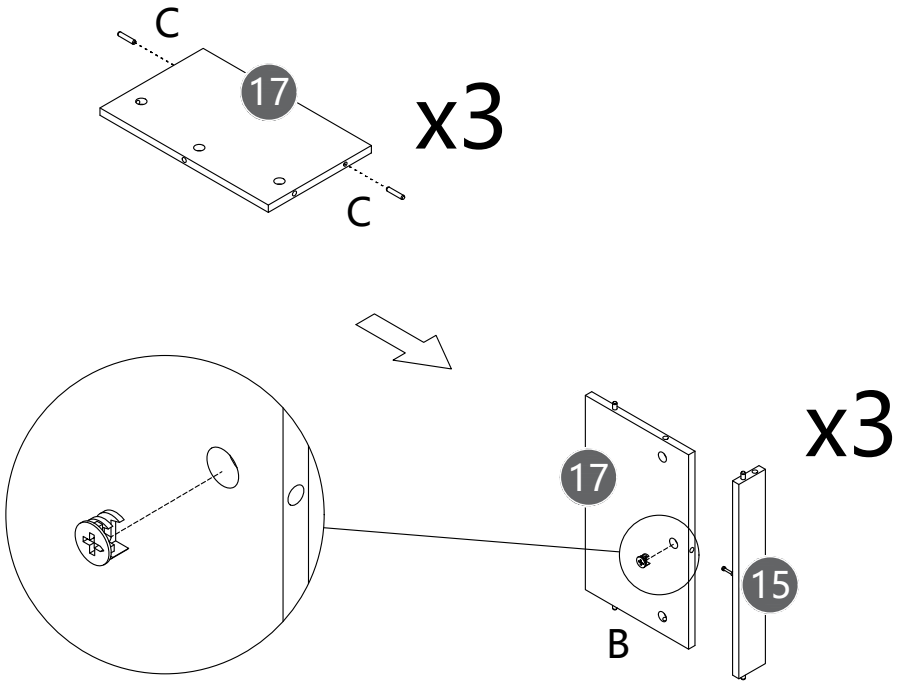


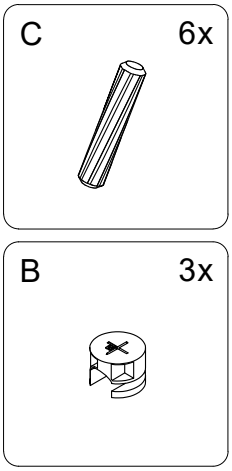


## 10

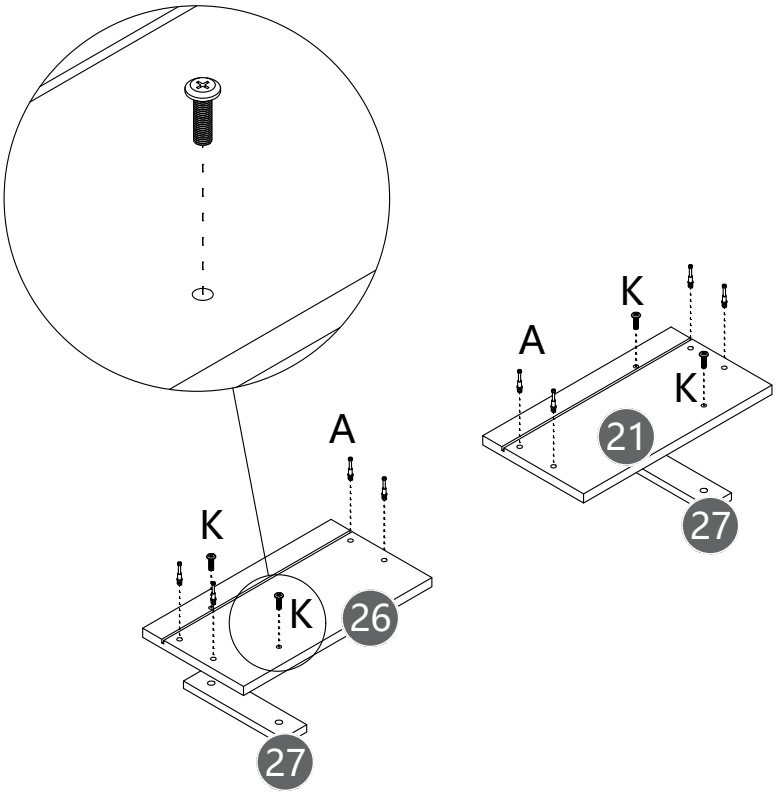


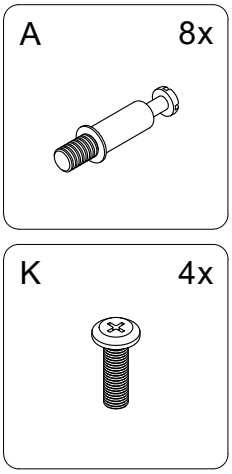

# 11

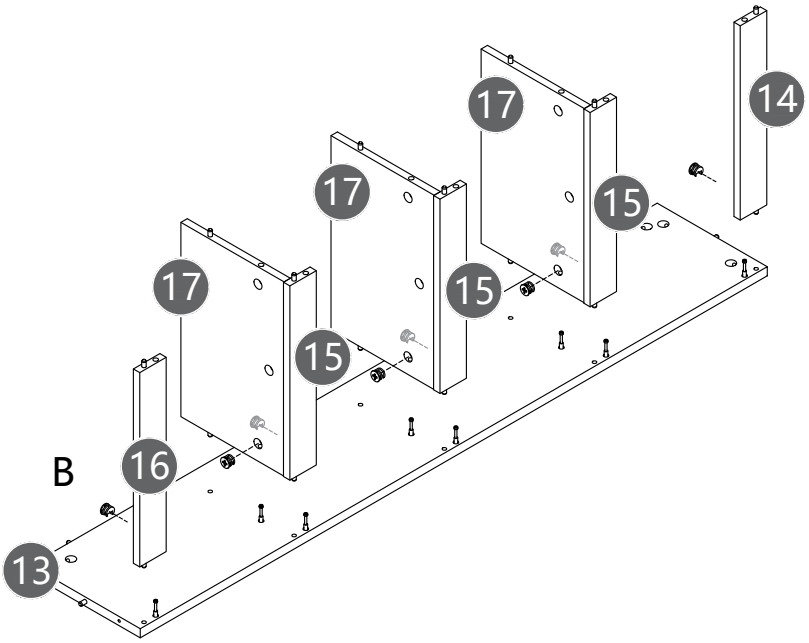


B 8x

# 12

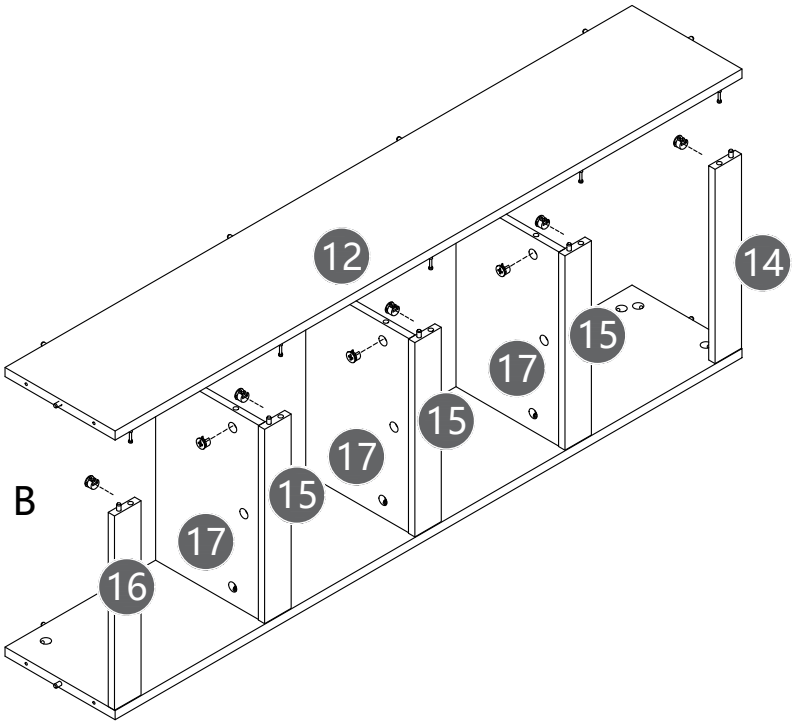


B 8x

# 13

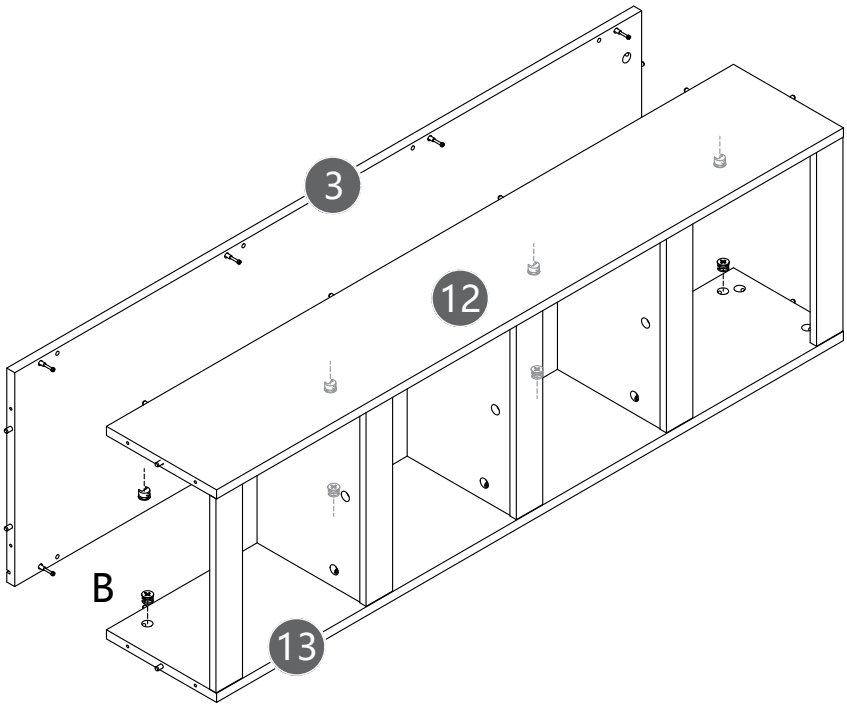


B 8x

# 14

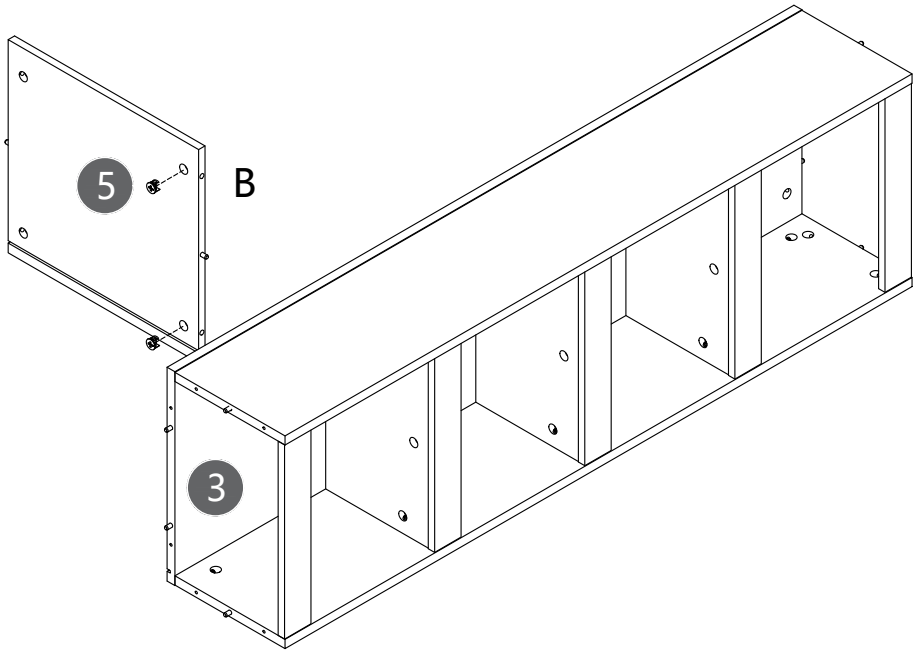


B 2x

15

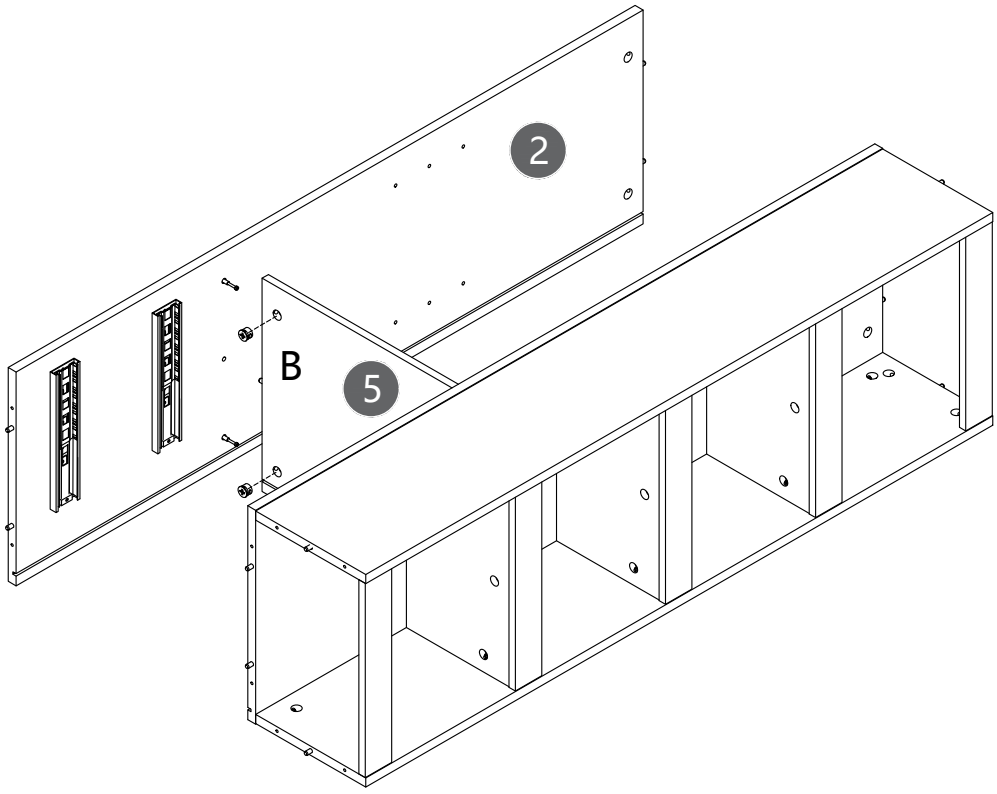


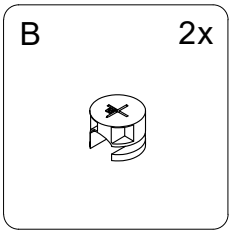


16

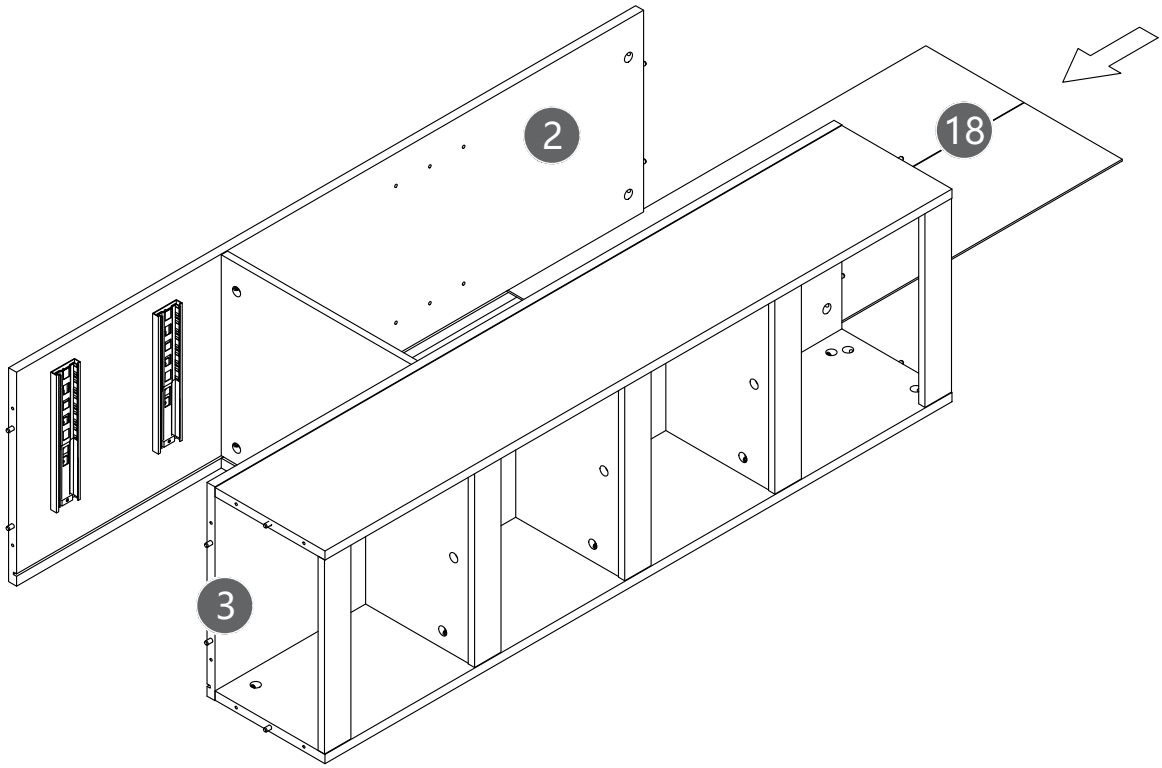

17

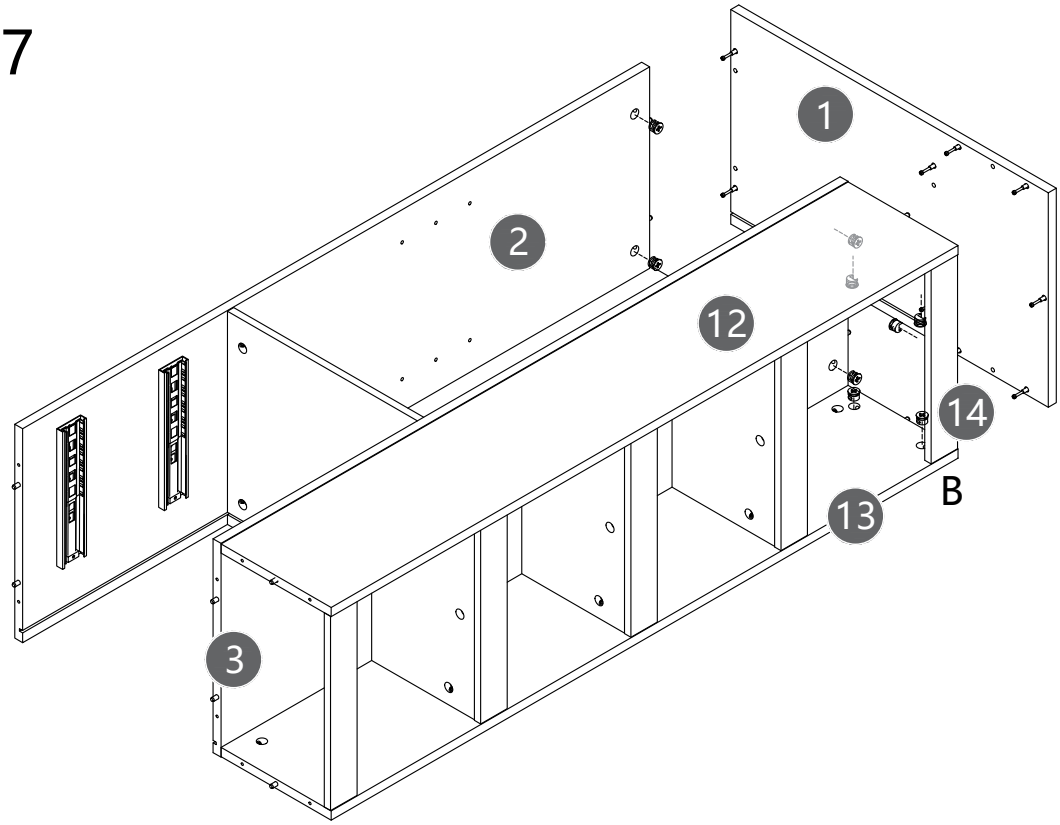


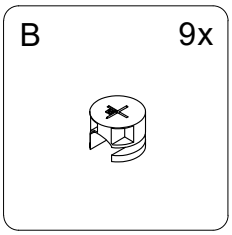


18

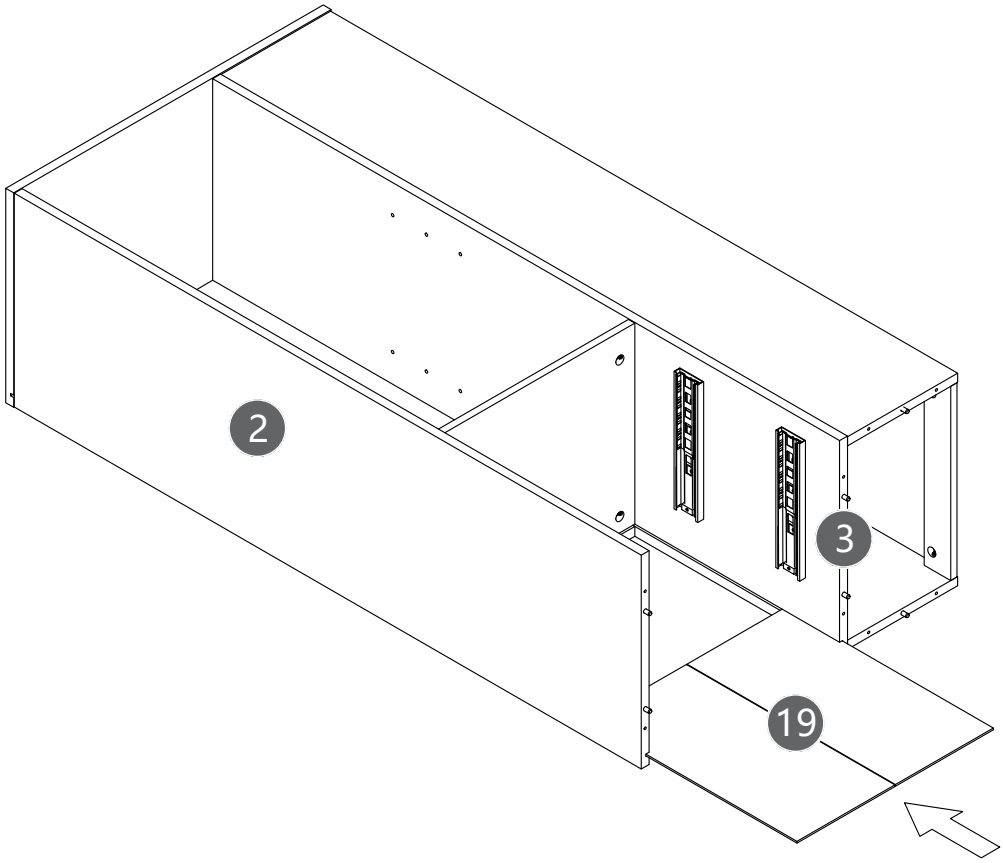

19

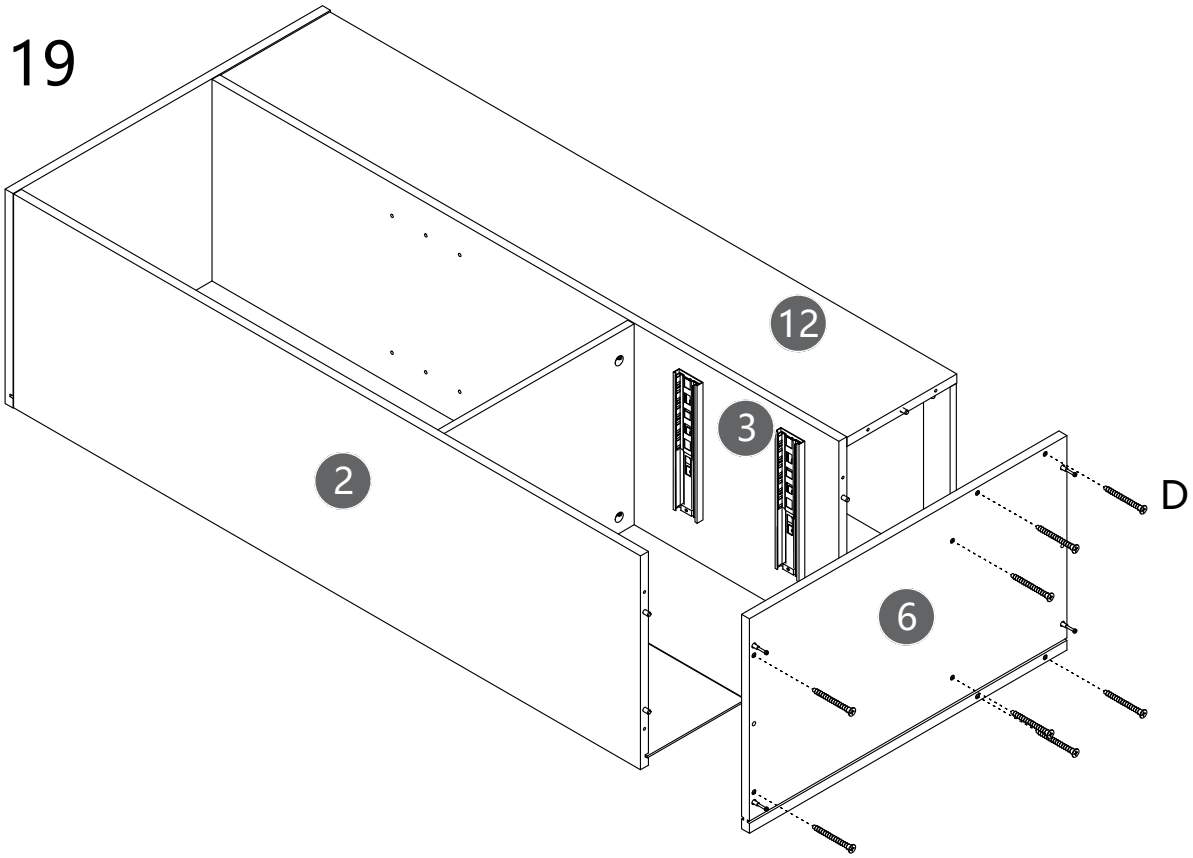


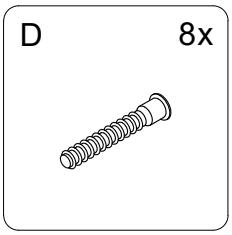


20

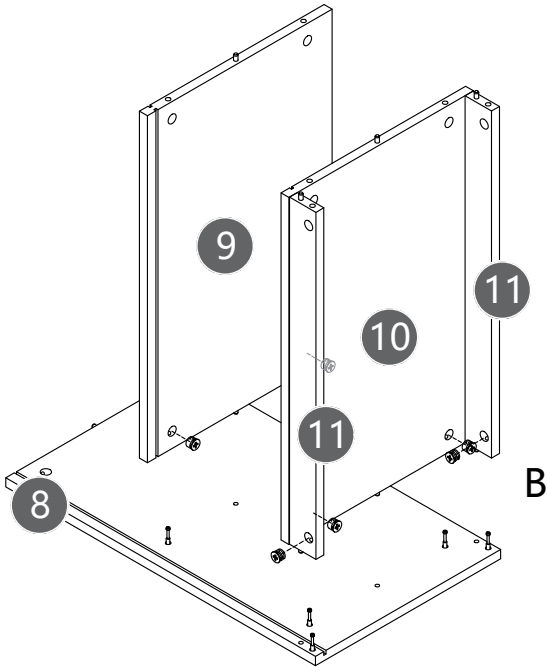


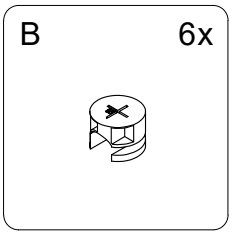

21

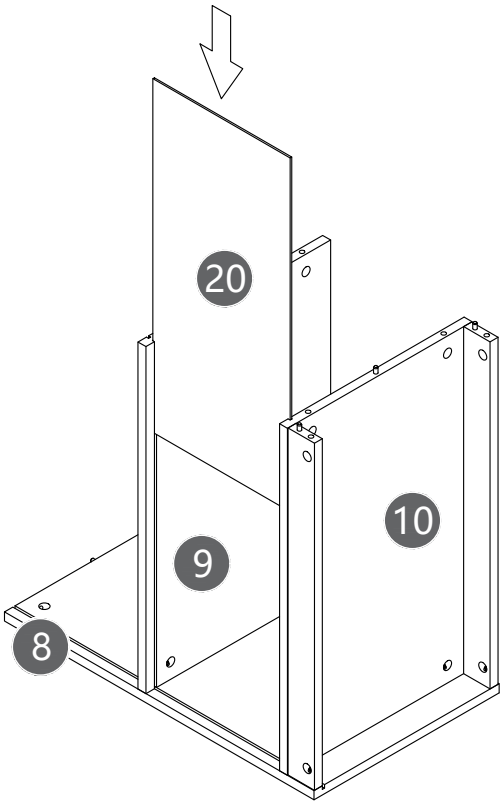


22

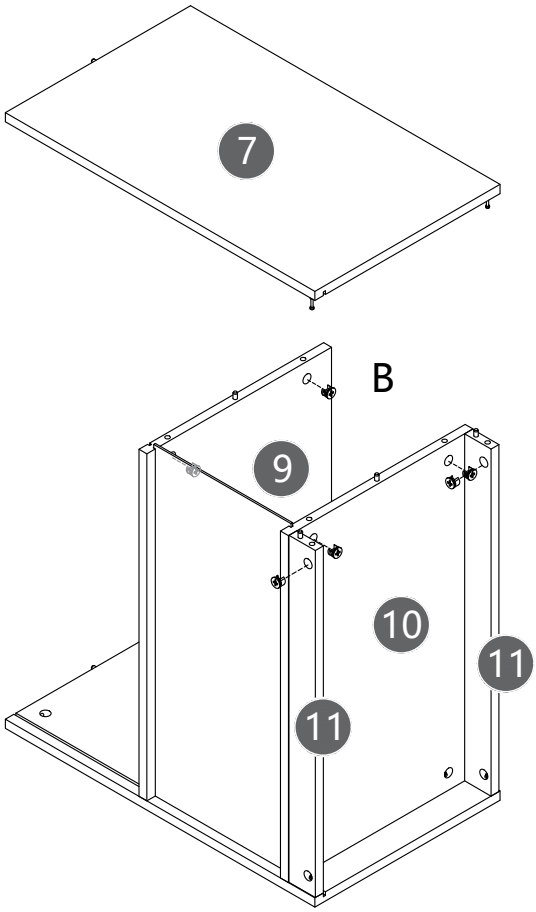


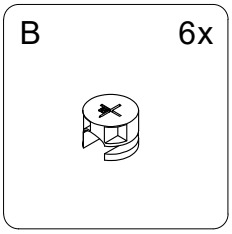

23

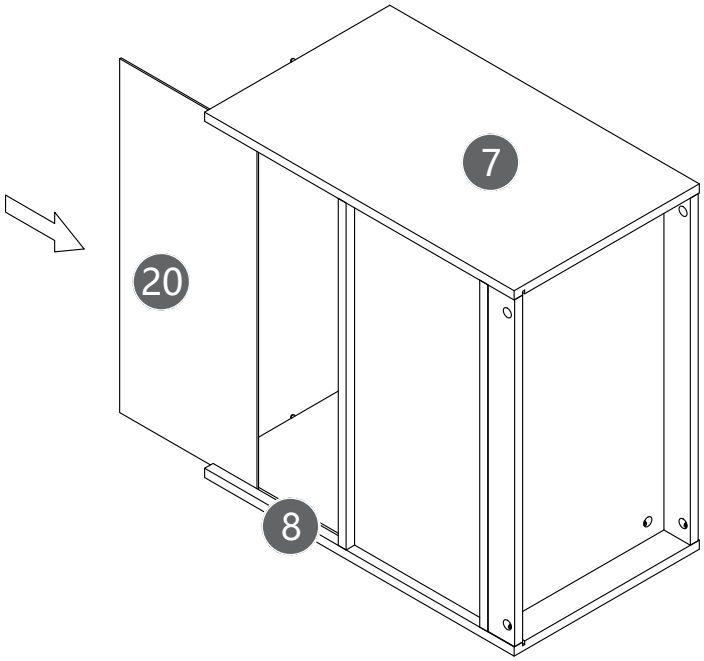


24

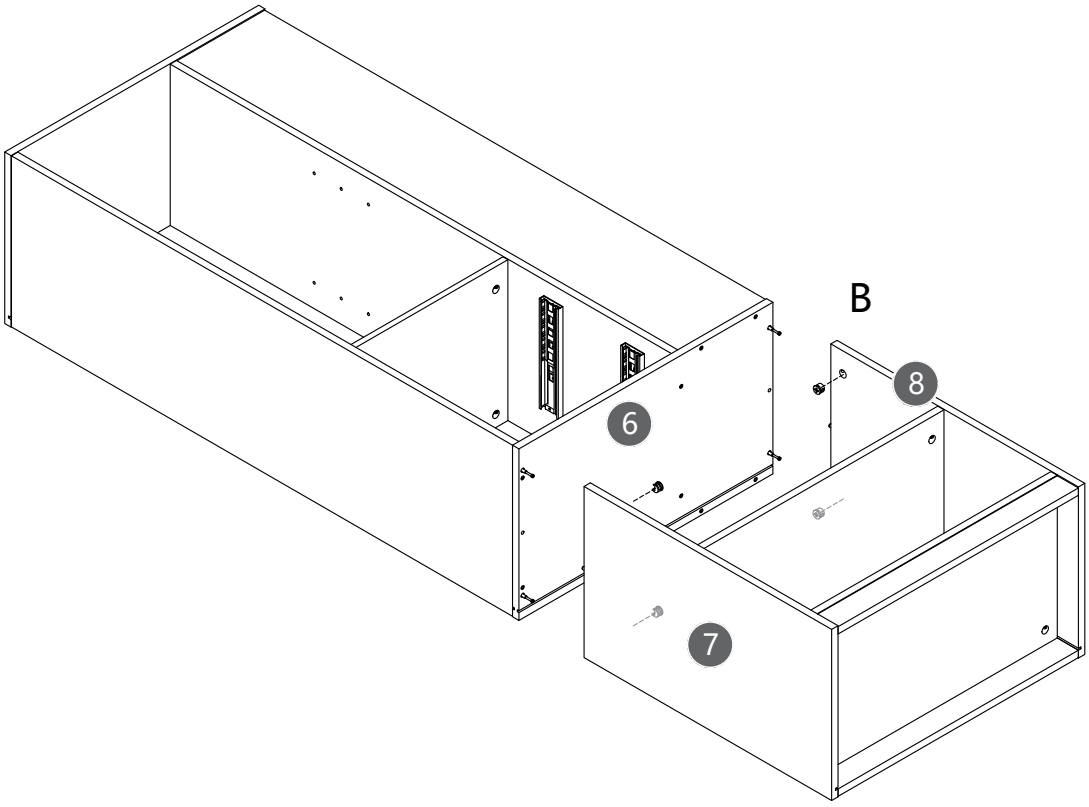


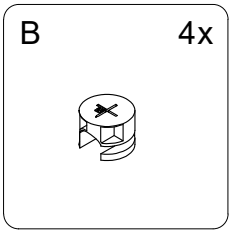

## 25

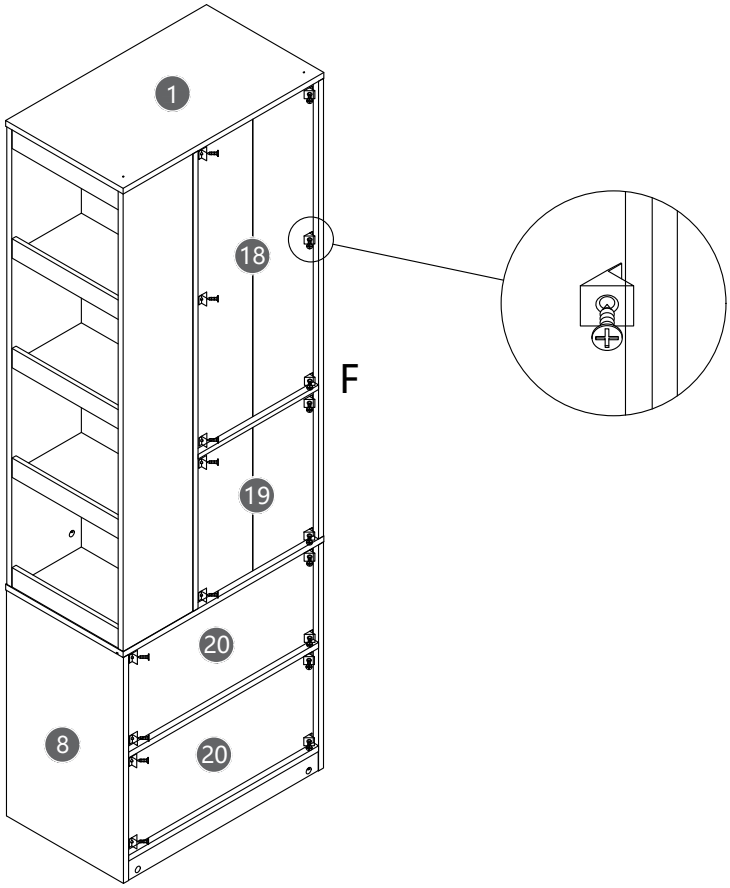


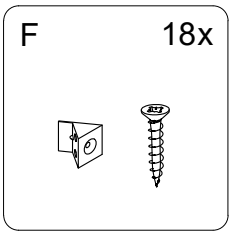


## 26

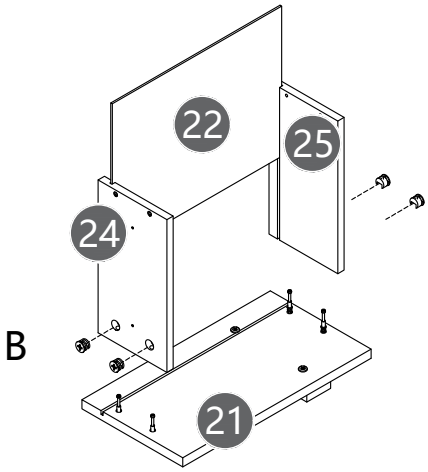


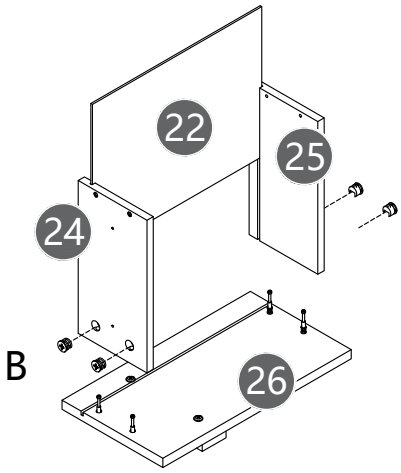


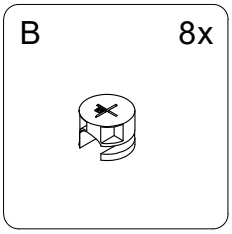

## 27

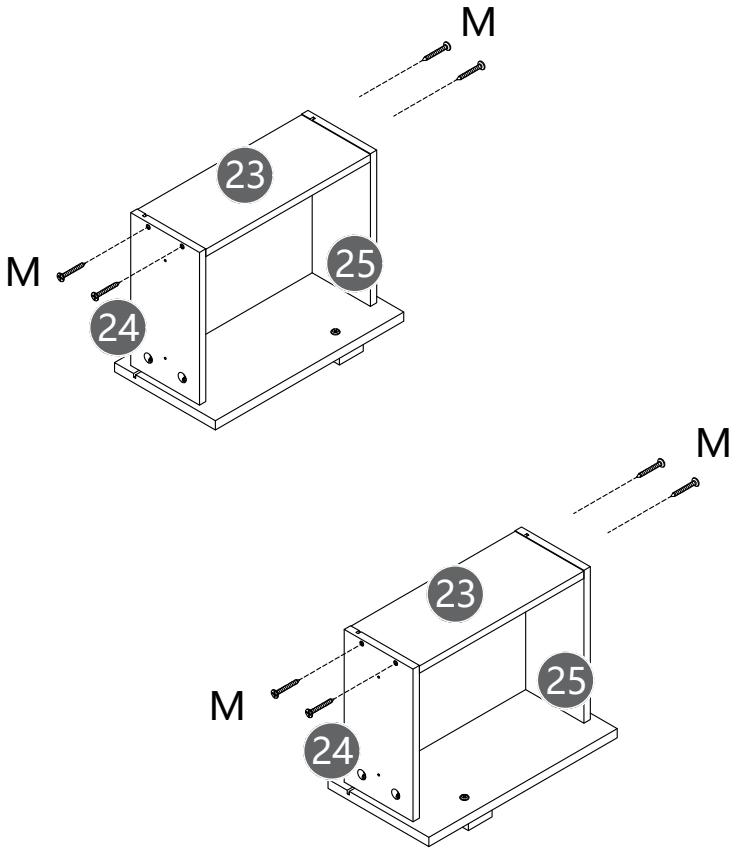
M
23
M
25
24
M
23
25
M
24

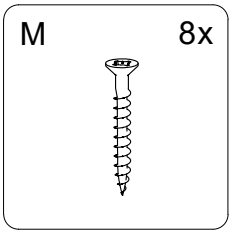
M
8x

## 28

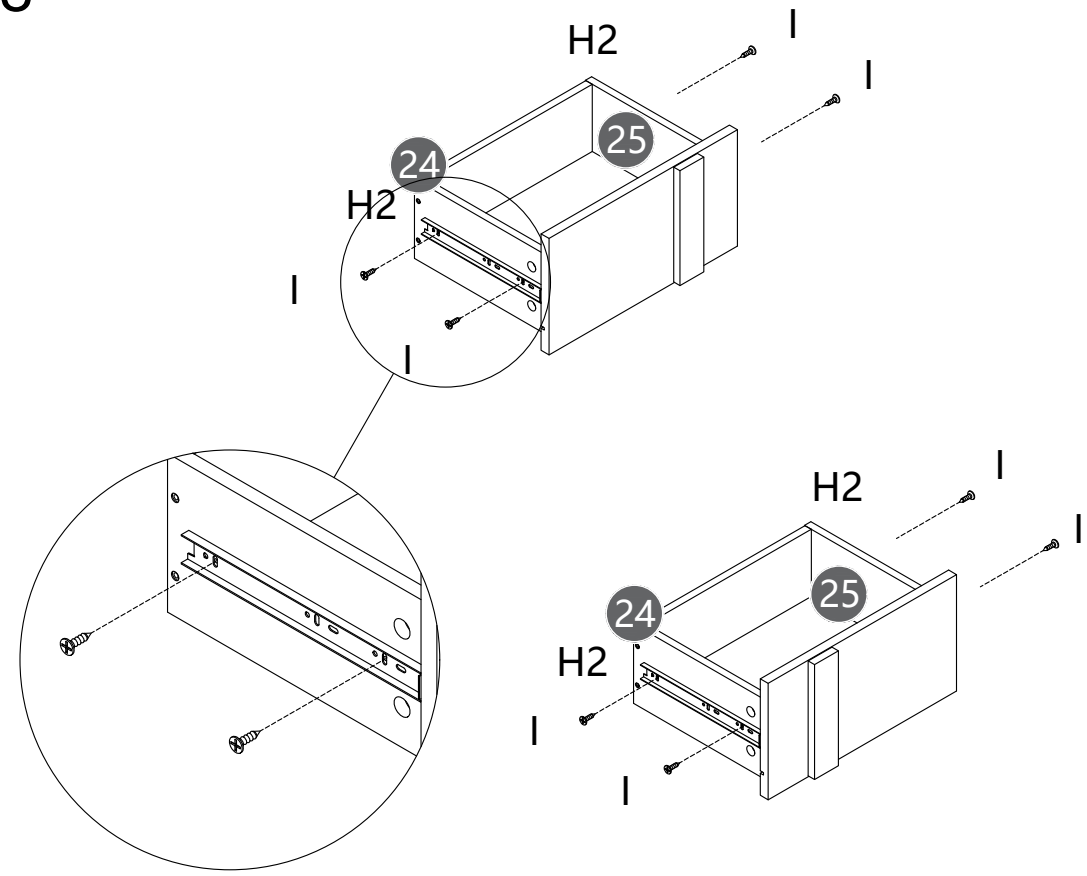
H2
I
I
25
24
H2
I
I
H2
I
I
25
24
H2
I
I

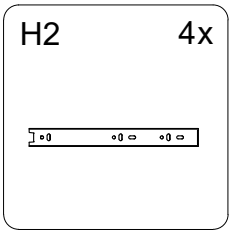
H2
4x

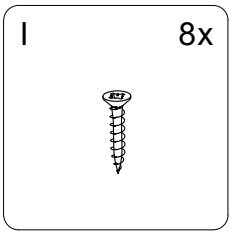
I
8x

## 29

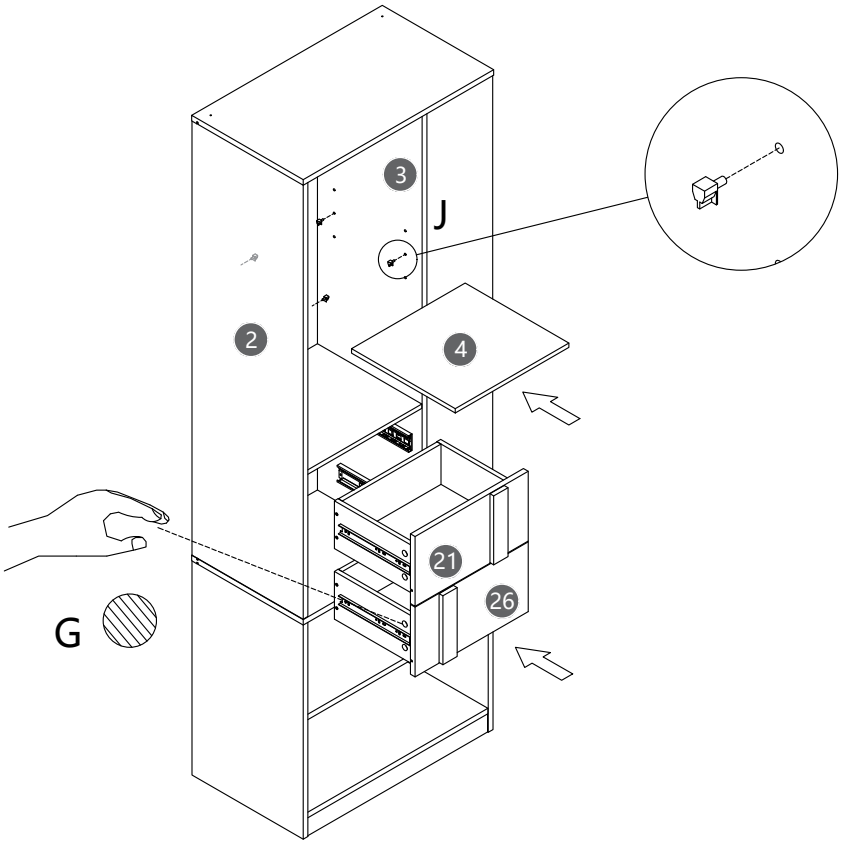


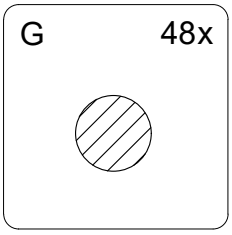


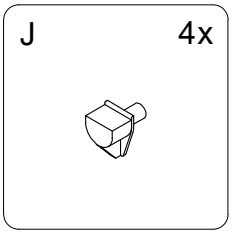

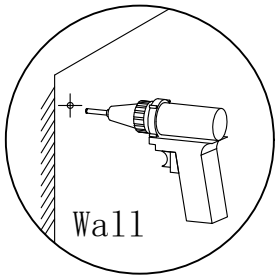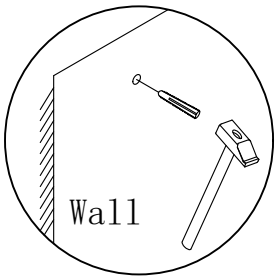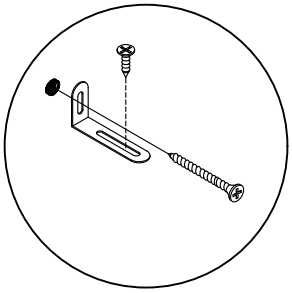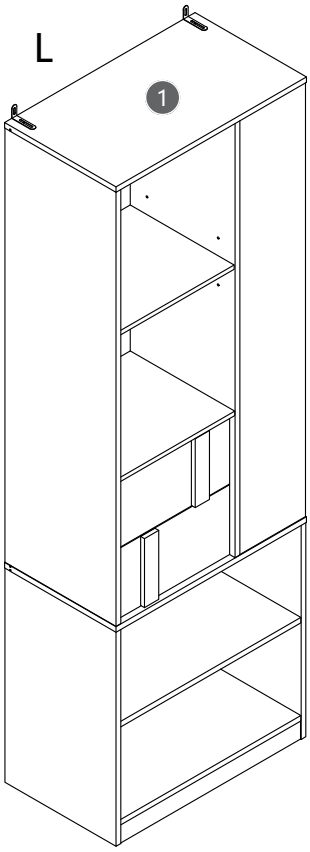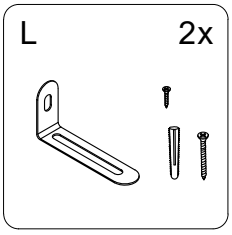
## 30