HAWKROWN®

HAWKROWN®

www.hawkrown.com

USER MANUAL

Thank you for choosing our product. Please read this user manual thoroughly before installation and use. Retain this manual for future reference.

IMPORTANT TIPS

⚠ Safety Instructions

Please read and follow all safety instructions before use.

1.Turn off the power before installation.
2.Keep out of reach of children.
3.Do not disassemble or modify the product.
4.This product is designed for indoor use only.
5.Keep away from flammable materials.

⚠ Cleaning & Maintenance

1.Always turn off the power before cleaning.
2.Do not disassemble or wash the bathroom fan with water.
3.To clean the fan, remove the entire bathroom fan and use a dry brush or blower.

CONTENTS

BEFORE INSTALLATION 02

INSTALLATION 03

Step 1: Connect the Panel 3
Step 2: Power On and Remote Control Pairing Test 3
Step 3: Prepare Ceiling Opening..... 4
Step 4: Installation Mounting Bracket..... 4
Step 5: Install Ventilation Pipe..... 5
Step 6: Install Machine 5
Step 7: Insert the Air Outlet into the Machine..... 7
Step 8: Correctly Connect the Panel 7
Step 9: Compress the Spring Clips on Both Sides..... 7

ABOUT OPERATION/CONTROL 08

Remote Control Operation 08
APP Operation 13
Voice Operation 22

COMMON PROBLEM 23

WARRANTY 25

BEFORE INSTALLATION

- Verify that all parts listed are included.
- Ensure the fan dimensions are compatible with your duct opening.
- Test the fan while plugged in to confirm proper functionality.

Parts

① Machine	② Panel	③ Mounting Bracket	④ Remote control
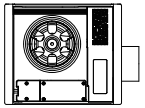 1	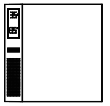 1	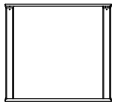 1	1
⑤ Clamp	⑥ Manual	⑦ Screw	⑧ Ventilation pipe
2	1	(for machine) (for remote control) **6x2** **4 × 2 required, 2 × 2 spare**	1
⑨ Wiring terminal	⑩ Glove	⑪ Washers	⑫ Auxiliary Accessories
1	1	6	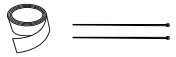 Adhesive tape x2 Cable tie x2 1

Parameters (Reference Only)

Product Name	Box Size	Panel Size
Fan Plus	12.83″x11.14″x6.18″	12.99″ x 12.99″
V/Hz	**Fan Power**	**Light Power**
110V,60Hz	45W	24W
RGB Power	**Audio Power**	/
7W	5W	/

* **Note**: Specifications are for reference only.
Please refer to the product nameplate for accurate data.

INSTALLATION

Notice

1. Please read these instructions carefully before installation.
2. Installation and wiring must be carried out by a qualified electrician.
3. Always turn off the power supply before installation to prevent electric shock.

Step 1 Connect the Panel

Connect the front panel ② to the machine ①.The panel must be connected before performing functional tests.

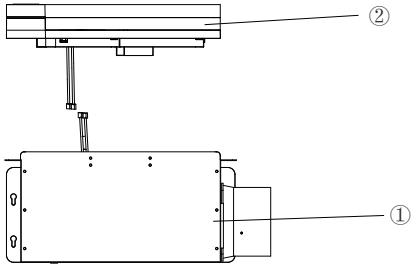

Step 2 Power On and Remote Control Test

1.Turn on the power to test the machine.
2.After confirming the test is successful, disconnect the panel from the machine.

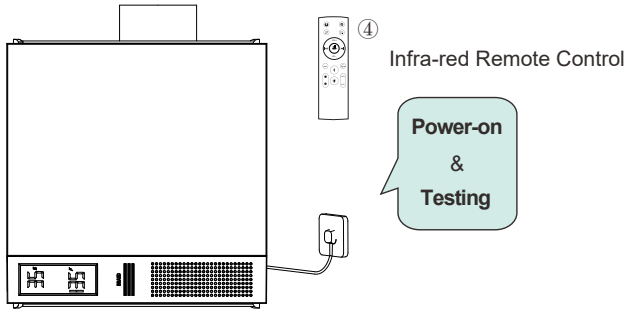

*** Note**:Infra-red remote control should be pointed directly at the device to ensure proper signal reception and reaction.
The panel must be removed after testing to allow the box to be installed on top.

INSTALLATION

Step 3 Prepare Ceiling Opening

Use appropriate tools to cut an opening measuring 11.38 inx11.38 in at the desired installation location in the ceiling.(You can also use the size paper prepared for you to fix the position and make the opening.)

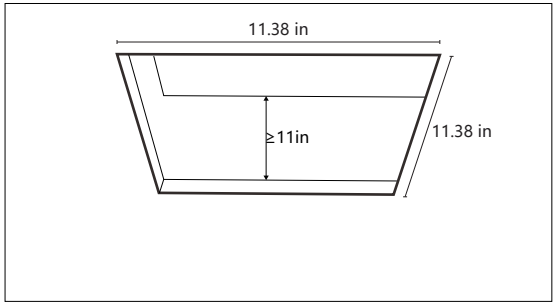

*** Note:** Minimum 11-in roof-to-ceiling clearance required for installation.

Step 4 Installation Mounting Bracket

1. Insert the mounting bracket ③ into the ceiling opening above.
2. Above the opening, expand the mounting bracket towards both ends (adjustable range: 14.2 in ~ 24 in).
3. Once both ends of the mounting bracket touch the crossbeams, secure it to the beams using self-tapping screws ⑪.

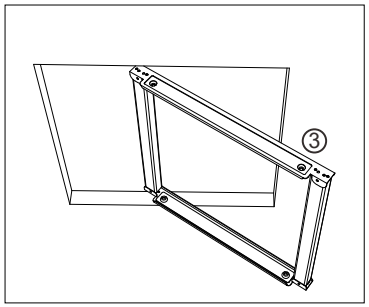

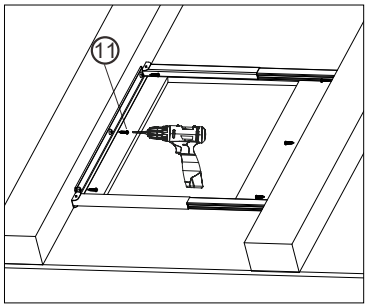

*** Note**: If the maximum extension of the mounting bracket is insufficient to reach both crossbeams, prepare wooden strips of adequate length. First, secure them to the crossbeams, then attach the mounting bracket to the prepared wooden strips.

INSTALLATION

Step 5 Install Ventilation Pipe

1. Securely wrap and seal the ventilation pipe ⑫ to the pre-reserved pipeline connec tion with adhesive tape ⑧ .
2. Remove the air outlet grille from the main unit, and secure the grille to the other end of the ventilation pipe using a clamp ⑤.

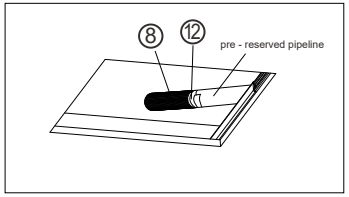

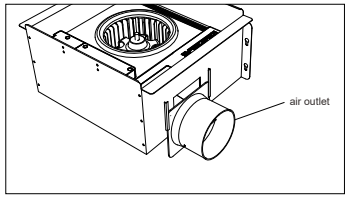

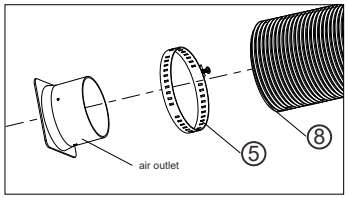

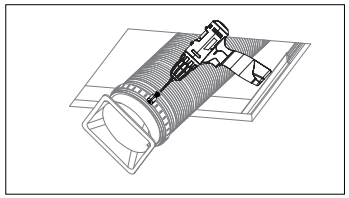

(If additional reinforcement is needed, use zip ties or tape from the auxiliary installation accessories ⑫ for further fixation)

Step 6 Install Machine

Insert the machine into the ceiling opening above and connect it to the power supply.

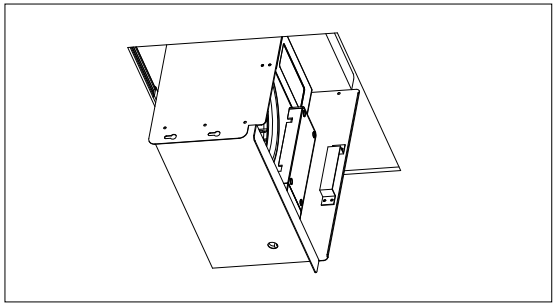

INSTALLATION

Connect to Power Supply

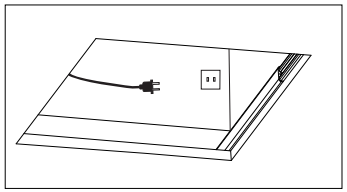

• Option 1- Direct Plug Connection

Plug the bathroom fan into a standard power outlet. If hardwiring is necessary, consult a licensed electrician.

• Option 2 - Wire Terminal Connection

1. If there is no pre-installed power outlet at the installation site, you may use the wiring terminals ⑨ to connect the power lines directly.
2. Wiring configurations may differ between households. The example shown here is for reference only.Please follow your actual wiring setup.

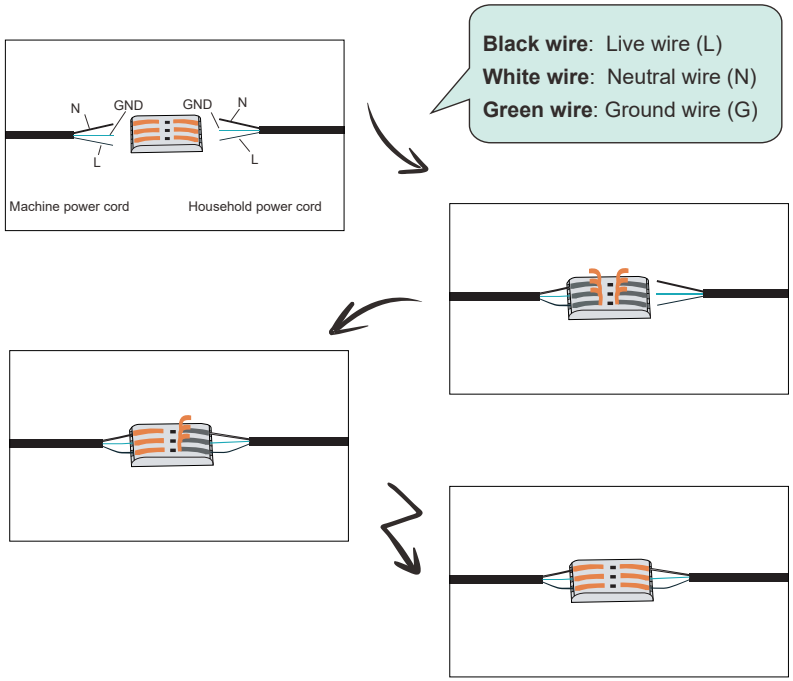

⚠ Improper electrical connection may result in shock, fire, or equipment damage. Always ensure compliance with local electrical codes.

INSTALLATION

Step 7 Insert the Air Outlet into the Machine

Insert the air outlet into the machine, then adjust its position and place it over the mounting bracket.

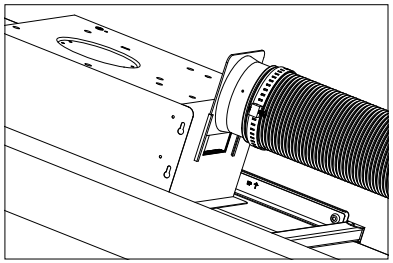

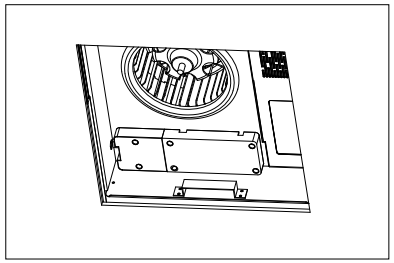

Step 8 Correctly Connect the Panel

Correctly connect the panel ② to the machine ① to ensure the machine can operate safely.

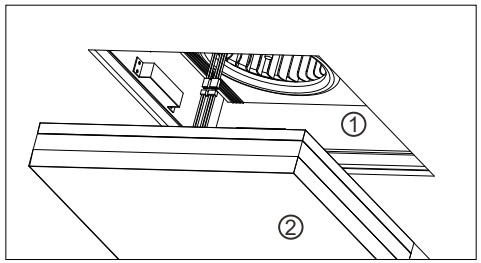

Step 9 Compress the Spring Clips on Both Sides

Compress the spring clips on both sides, push them into the machine until they pop out, and the installation is complete.

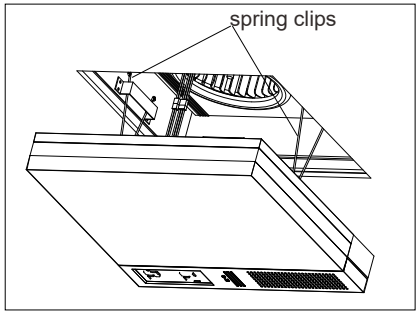

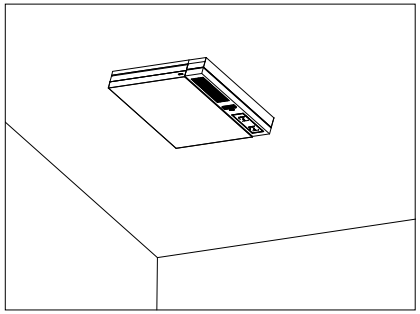

About Operation/Control

Remote Control Operation:

④

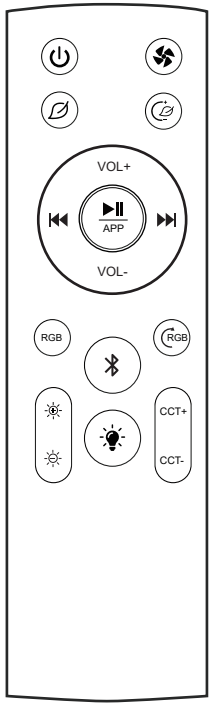

* **Note**:
Please make sure the time between pressing different keys on the remote control takes more than 1 second. If the time is less than 0.5s, the receiver of the remote control may not be able to obtain a signal to respond because the receiving time is too short.

Dust filter: Can be pulled out for removal and cleaning.

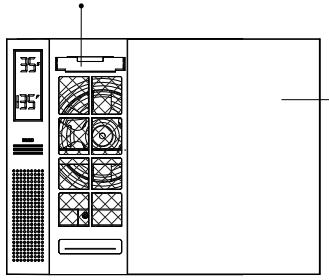

The front panel will automatically slide open only when the fan is running or during music playback.

All on/off: Short press to turn on or off all functions.This button has a memory function and will default to the last used setting (except for fan and ambient light modes). After power loss, it will revert to the original settings.

Fan: Short press to turn the fan on/off.

Light: Short press to turn light on/off.

About Operation/Control

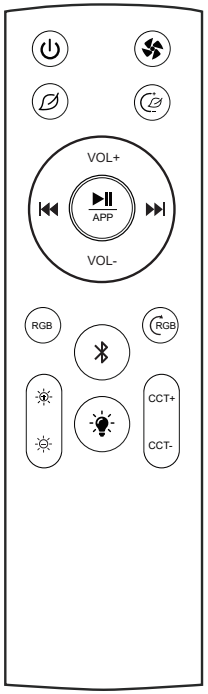

∗ Bluetooth pairing:

1. When you power on, the Bluetooth will automatically turn on and you will hear a "boop-boop" sound. You can use your phone to pair it.
2. On your phone, turn on Bluetooth and search for devices.
3. Locate "Fan Plus" in your device's Bluetooth list and select it.
4. You will hear a "boop" sound indicating a successful Bluetooth connection.
5. When you don't want to use Bluetooth, you can disconnect it via your phone or short press the Bluetooth button on the remote control.
6. To switch the Bluetooth connection to another mobile device, you must first unpair/disconnect the current device before pairing with the new one.

Bluetooth: The device automatically enables Bluetooth on startup for instant pairing. Press the button shortly to toggle Bluetooth on/off.

RGB

RGB(on/off): Short press to the RGB ON/OFF.

RGB

RGB: Short press to cycle through RGB modes: Colorful mode → Breathing mode → Rhythm mode (activates upon music playback)

About Operation/Control

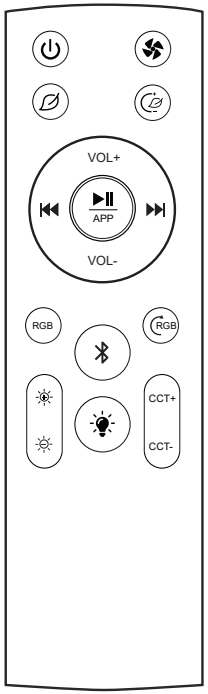

∗ Connect APP

1. When the device is off, press this button three times in a row to enter WiFi network configuration.
2. The display will show a 99-second countdown. During this time, you can open the Tuya app to complete the network setup (see page 5 for detailed instructions).

APP

Play/Pause&APP: Once paired with your phone via Bluetooth or App, you can play or pause music.

Previous song: Short press to go to the previous song.

Next song: Short press to go to the next song.

About Operation/Control

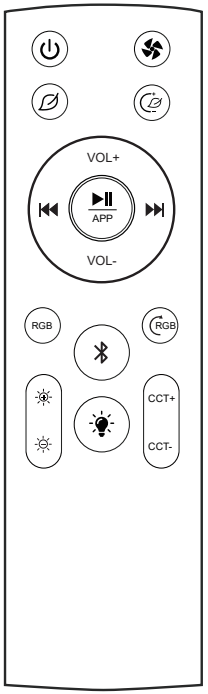

VOL+

VOL-

VOL+/VOL- : Short press to adjust volume in steps, long press to adjust volume smoothly.

Brightness: After turning on the light,short press to adjust brightness in steps.

CCT+

CCT-

Color Temperature: After turning on the light,short press to adjust color temperature in steps.

About Operation/Control

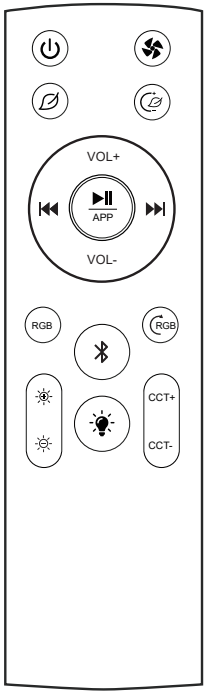

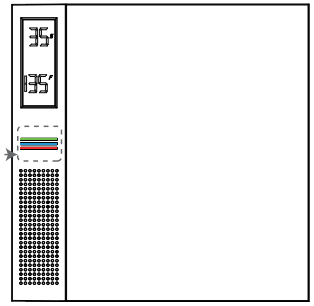

- Indicates good air quality; the fan remains off.
- Represents a transitional phase; the fan does not operate.
- Indicates severe air odor; the fan automatically turns on for ventilation.

Sensor(on/off): After initial power-on, the sensor function is enabled by default. A short press of the button can turn the sensor function on/off.

When the sensor function is activated:

- If the air quality is good, the green indicator on the panel light bar will illuminate, and the fan will not operate.
- If severe air odor is detected, the red indicator on the panel light bar will illuminate, and ventilation will automatically turn on.
- When the panel light bar displays blue, it indicates a transitional phase, and the fan remains inactive.

Sensor: Short press to select humidity level: 30%, 60%, or 80%.When ambient humidity reaches the preset level or upon detection of abnormal odor， the fan will automatically activate for ventilation.

About Operation/Control

APP Operation:

1. Connect your machine to the mobile APP .

Please scan the QR code slightly below to download.(Smart Life or Tuya Smart)

Smart Life

Tuya Smart

Download on the App Store

GET IT ON Google Play

Open the TUYA SMART APP, sign up with an email or phone number.

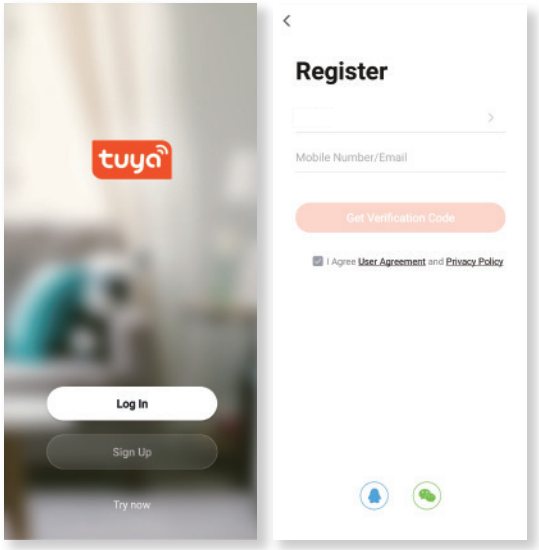

After connecting the machine to the power supply, press the " ▶II APP " three times consecutively on the remote control, and the device screen will display a 99s countdown. The machine will enter network configuration mode.

About Operation/Control

1.3.1 Click the ⊕ on the top right to add the device, click the"Small Home Appliances" and select "Bathroom Heater(Wi-Fi)".Please select your network and enter password.Click “Next”.

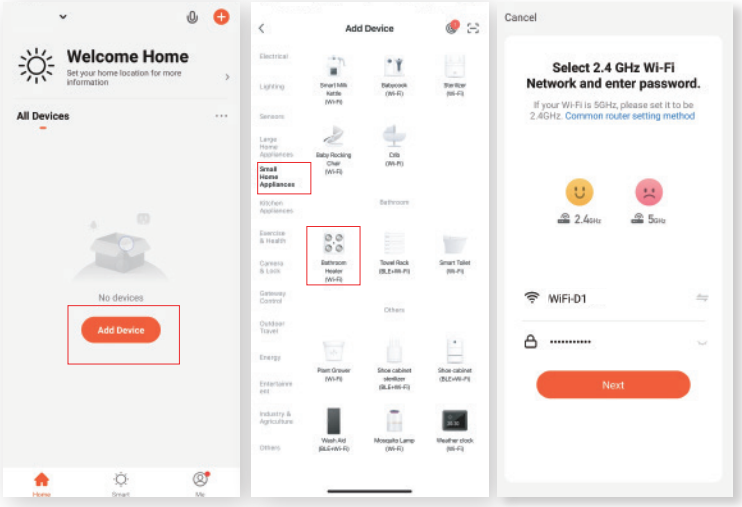

1.3.2 then click to select the "Blink Quickly" button to enter add device state.

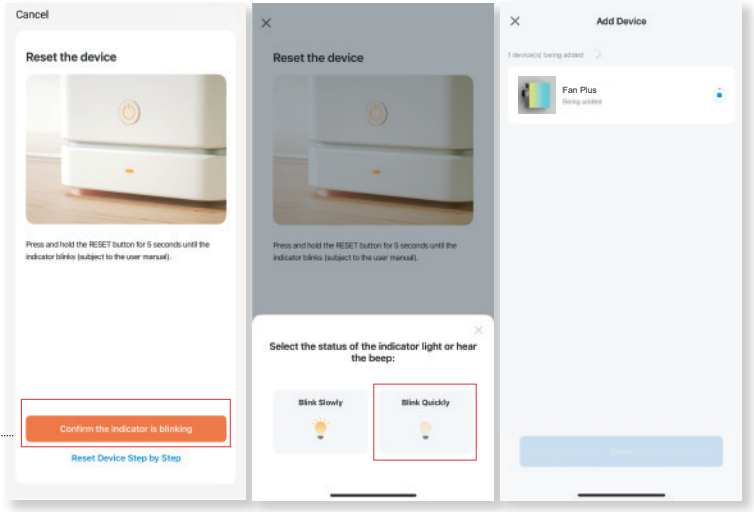

Confirm the screen displays a 99s countdown

About Operation/Control

1.4 Use App

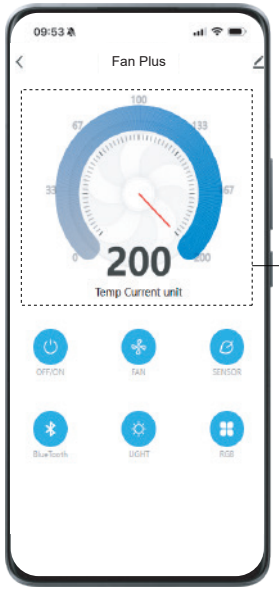

The App shows the air duct temperature, and the machine panel displays the ambient temperature.

- OFF/ON : Turn on or off all functions .
- FAN : Turn the Fan function on or off.
- SENSOR : Turn the Sensor function on or off.
- BlueTooth : Turn the Bluetooth function on or off.
- LIGHT : Turn the Light function on or off.
- RGB : Select the RGB mode:

About Operation/Control

2. Connect your speaker to the mobile APP.

First, you need to download the smart speaker App, log in or register an account, and connect the smart speaker.

Download on the App Store GET IT ON Google Play

2.1 To connect the speaker to the app, you have two options:

- **Option 1 – Use Alexa and Google to connect to the TUYA**

a. Alexa:

- Tap "More" at the bottom.
- Select "Skills & Games".
- Search for the skill (e.g., Tuya Smart) in the search bar.
- Click "ENABLE TO USE".
- The Alexa App will launch the Tuya Smart App—tap "Agree and Link".

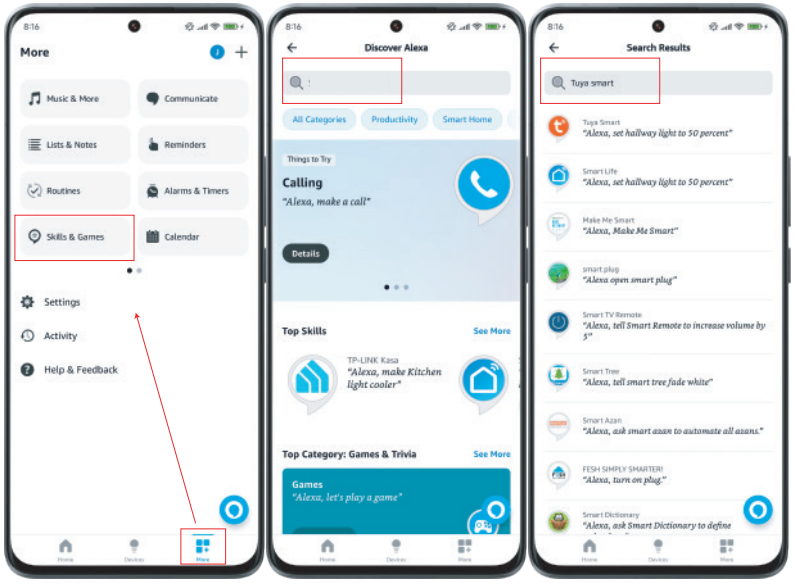

About Operation/Control

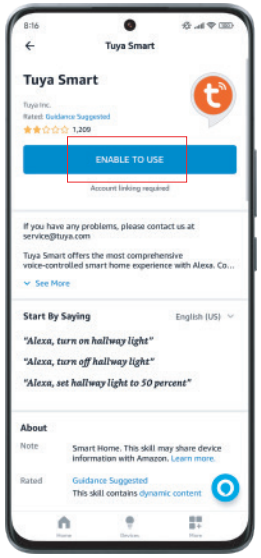

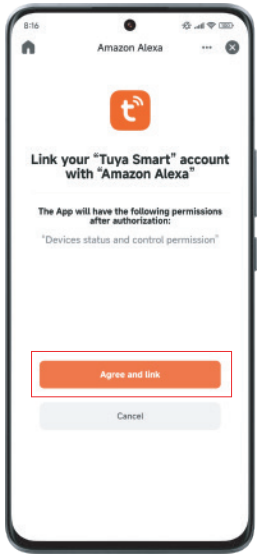

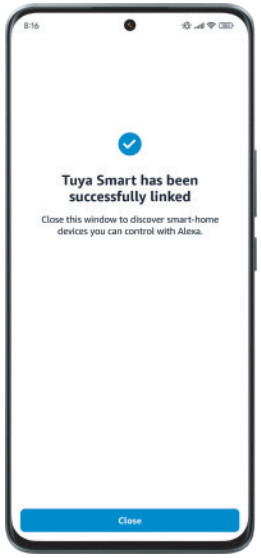

b. Google Home:

- Tap "Devices" at the bottom.
- Click "Add".
- Select "Works with Google Home".
- Search for the skill (e.g., Tuya Smart) in the search bar.
- Click "Continue".
- The Google Home App will launch the Tuya Smart App—tap "Agree and Link".

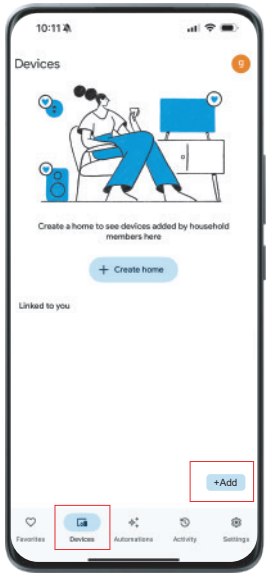

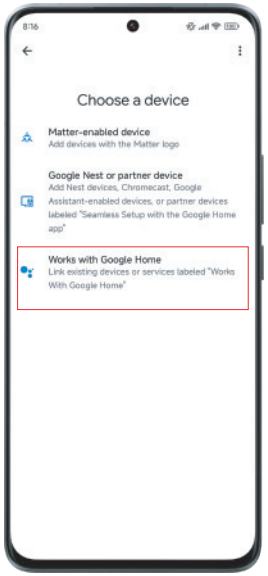

About Operation/Control

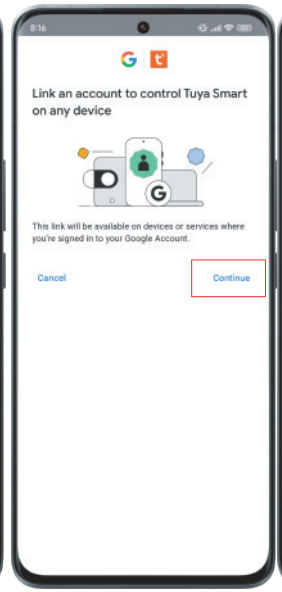

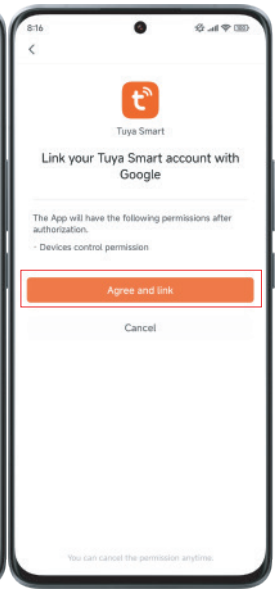

- **Option 2 –Alexa and Google also support connection starting from the Tuya App.**

In the Tuya Smart App:

- Tap "Me" at the bottom.
- Select Alexa or Google.
- Tap "Connect".
- Confirm authorization.

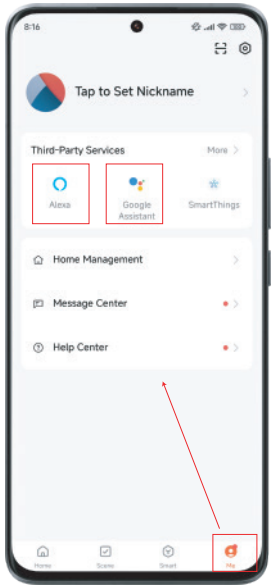

About Operation/Control

a. Alexa

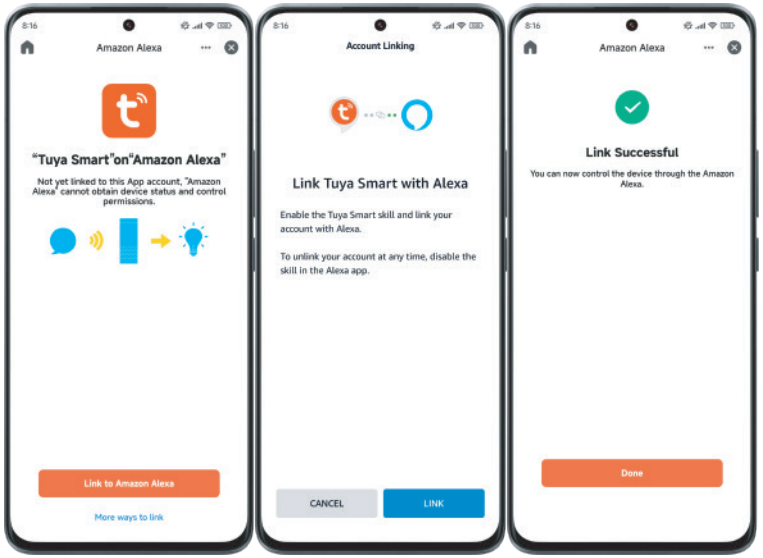

b. Google

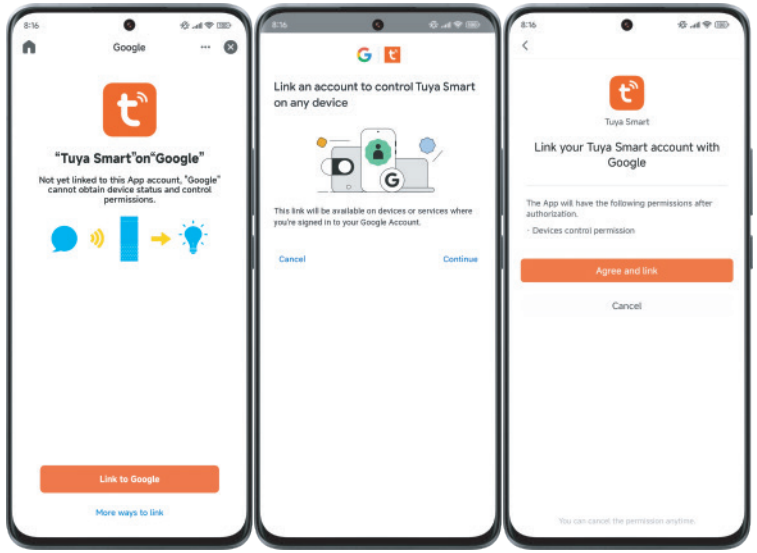

About Operation/Control

2.2 Use APP

a. Alexa:

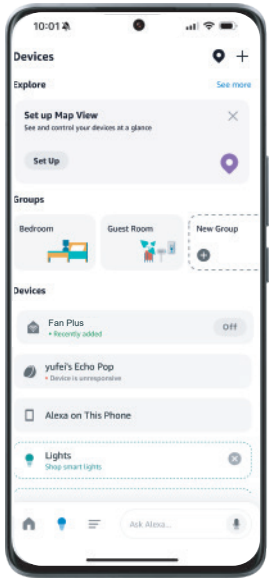

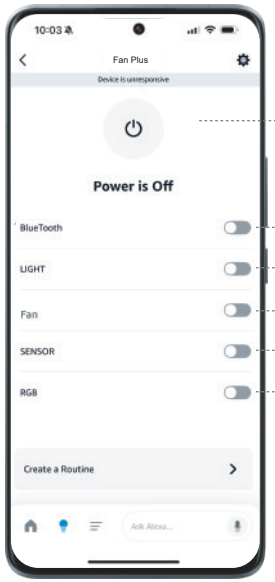

Click“ ”to turn off all functions.

Click“ ”to turn the Bluetooth function on or off.

Click“ ”to turn the Light function on or off.

Click“ ”to turn the Fan function on or off.

Click“ ”to turn the Sensor function on or off.

Click“ ”to turn the RGB function on or off.

About Operation/Control

b. Google:

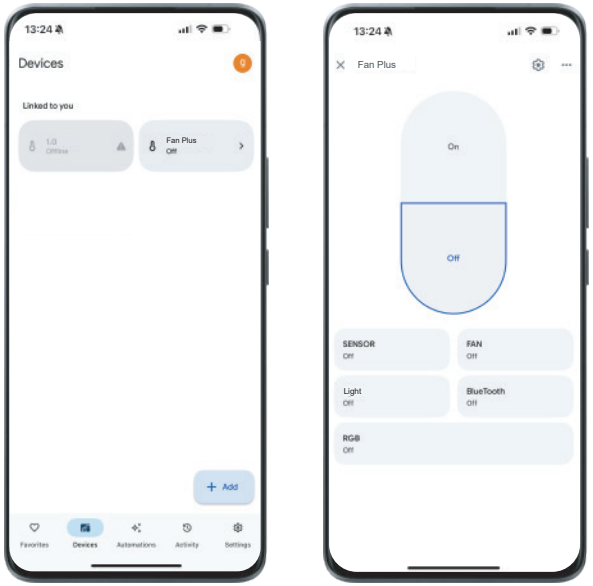

- Click“ On ”to turn on the Fan Plus.
- Click“ Off ”to turn off the all functions.
- Click“ SENSOR ”to turn the Sensor function on or off.
- Click“ Bluetooth ”to turn the Bluetooth function on or off.
- Click“ LIGHT ”to turn the Light function on or off.
- Click“ Fan ”to turn the Fan function on or off.
- Click“ RGB ”to turn the RGB function on or off.

About Operation/Control

Voice Operation:

Once the speaker is connected, activate voice control to operate your smart Fan.

a. Alexa:

Category	Action	Command
ON/OFF	On	Turn on Fan Plus.
	Off	Turn off Fan Plus.
Bluetooth	On	Turn on Bluetooth on Fan Plus.
	Off	Turn off Bluetooth on Fan Plus.
Light	On	Turn on LIGHT.
	Off	Turn off LIGHT.
Fan	On	Turn on FAN.
	Off	Turn off FAN.
Sensor	On	Turn on SENSOR on Fan Plus.
	Off	Turn off SENSOR on Fan Plus.

b. Google:

Category	Action	Command
ON/OFF	On	Turn on Fan Plus.
	Off	Turn off Fan Plus.
Bluetooth	On	Turn on Bluetooth on Fan Plus. /Activate Bluetooth for the Fan Plus.
	Off	Turn off Bluetooth on Fan Plus. /Cancel Bluetooth for the Fan Plus.
RGB	On	Turn on RGB on Fan Plus. /Activate RGB for the Fan Plus.
	Off	Turn off RGB on Fan Plus. /Cancel RGB for the Fan Plus.
Light	On	Activate Light for the Fan Plus.
	Off	Cancel Light for the Fan Plus.
Fan	On	Activate Fan for the Fan Plus.
	Off	Cancel Fan for the Fan Plus.
Sensor	On	Turn on Sensor on Fan Plus. /Activate Sensor for the Fan Plus.
	Off	Turn off Sensor on Fan Plus. /Cancel Sensor for the Fan Plus.

COMMON PROBLEM SOLUTIONS

Issue	Possible Cause	Solution
The fan seems louder than it should.	The CFM is too high.	Be sure the CFM rating on the fan matches the square footage of your room.
	The damper is damaged or not working properly.	Check the damper to ensure it is opening and closing properly. If the damper has become damaged,please contact Customer Service.
	The bend in the duct is too close to the fan discharge.	Be sure you do not have any sharp bends in the duct closer than 18 in. to the fan discharge.
	The fan discharge is reduced to fit a smaller duct.	Use the recommended size ducting to reduce fan noise.
	The fan body is not attached securely.	Be sure the fan is securely attached to the ceiling joists.
The fan is not clearing the room.	There is insufficient airflow intake in the room.	Ensure a door or window is slightly ajar to allow airflow, as the fan cannot draw air out of the room without sufficient intake air.
	/	NOTE:Using a tissue is not the correct method for determining if the fan is operating properly. If the fan clears steam from the room within approximately 15 minutes of completing your shower, then the fan is operating properly.

Q&A

1. How should I adjust if the ceiling hole size doesn't match the fan?

Please double-check your room size before purchasing. The mounting dimensions of our fan are 11.38 in x 11.38 in for the ceiling opening.If the hole is too small,trace the housing onto the ceiling and then cut with a keyhole saw. If it’s too big, patch it with a piece of drywall to fit the fan appropriately.

2.How should I troubleshoot if the light is not working?

Please ensure you're using a non-dimming switch with good contacts. Check that the cables to the light and fan are properly connected, and the wire connecting the lampshade to the housing is securely and properly inserted. The fan only works with 110V.

3.How should I troubleshoot if fan seems louder than it should?

①Check the damper to ensure it opens and closes properly.②Avoid sharp bends in the duct closer than 18 in. to the fan discharge.③Use the recommended size ducting (4-in).④Ensure the fan and fan house screws are securely attached in place.

4.How should I troubleshoot if the fan is not effectively clearing the room?

Ensure that a door or window is slightly ajar or open to allow airflow.Confirm that the fan is vented with the correct size duct(4-in).Confirm that the air vent and air intake is not blocked. It is recommended to use rigid or semi-rigid ducting

5.How to prevent moisture buildup?

Please avoid venting through soffit or ridge vents, as hot air drawn back into the attic through them can condense. Using insulated ducting can effectively prevent condensation when hot air from the bathroom exhaust encounters cold ducts in the attic.

WARRANTY

Our warranty guarantees that the products we sell are free from manufacturing defects for a period of one (1)year from the date of purchase. We will address any issues in accordance with the terms outlined below:

- This warranty applies to products purchased directly from us or through our authorized dealers.
- It covers defects in materials, workmanship, and malfunctions that render the product unusable.
- The warranty period is valid for one (1)year from the original date of purchase.
- Within the warranty period, we will either replace the defective product or issue a refund, at our discretion.

Notice

This warranty does not cover damages resulting from misuse, abuse, or normal wear and tear. It is non-transferable and valid only for the original purchaser.

Return Process

Damaged?
Wrong item?
Missing Parts?

Get your order information ready , photos will be very helpful.

Contact us.
https://www.hawkrown.com
service@hawkrown.com

Our service team will take care of your inquiries accordingly.

At last,
we shall provide a suitable solution to you.