Assembly Instructions

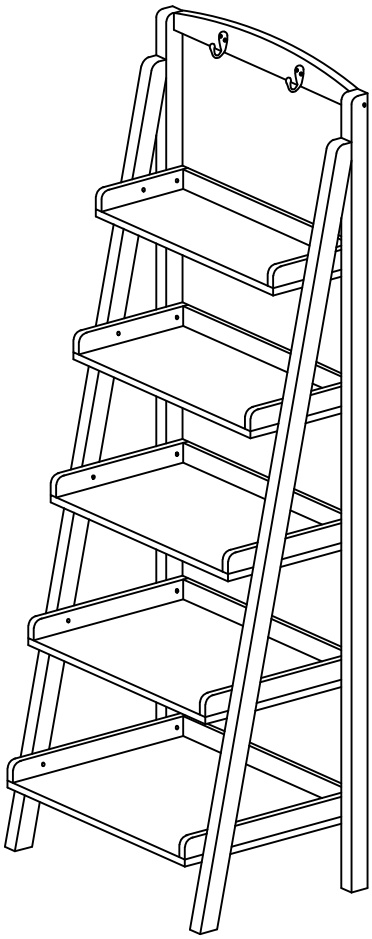

ASSEMBLY RATING

The Assembly Rating is a 5-point system that shows the degree of effort needed in assembling a specific product (with 1 being easy and 5 being difficult). For some products, two persons are recommended.

EASY DIFFICULT

Tools Required For Assembly:

Allen Wrench 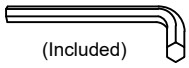 (Included)

Phillips Screwdriver (Not Included)

2 PERSONS RECOMMENDED

ASSEMBLY & CARE ADVICE

FOR YOUR FURNITURE TO LAST,CORRECT ASSEMBLY AND PROPER MAINTENANCE ARE NECESSARY.
PLEASE FOLLOW THE INFORMATION PROVIDED BELOW TO FULLY ENJOY YOUR FURNITURE.

BASIC ASSEMBLY TECHNIQUES

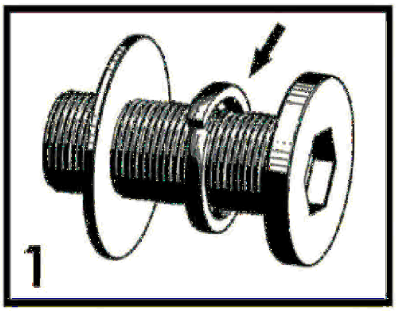

When lock or spring washer is used in an assembly, please make sure the lock or spring washer is placed between the larger flat washer and the head of the screw or bolt.

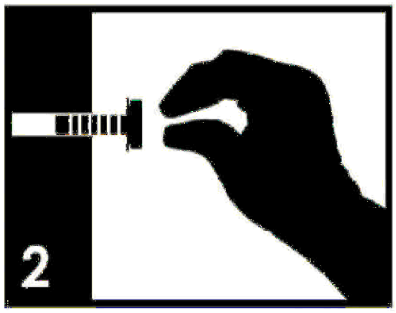

Position each part correctly and insert screws or bolts into their respective holes by hand tighten or using the proper hand tool. Only tighten when step is completed or when instructed to do so.

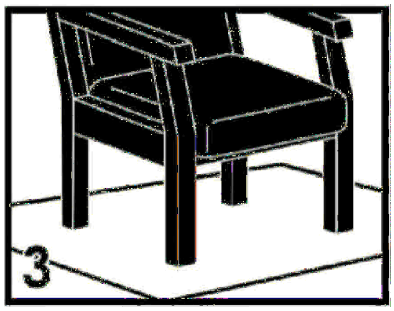

Use cardboard or carpet area when assembling furniture to prevent scratches .Make sure the furniture rests on a flat and level surface with each leg evenly touching the floor. No dragging of products/parts.

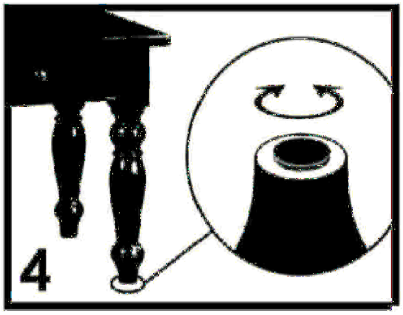

Some furniture comes with height adjusetment knobs underneath each leg. To lower or to raise each leg, you need to turn clockwise or counterclockwise, respectively.

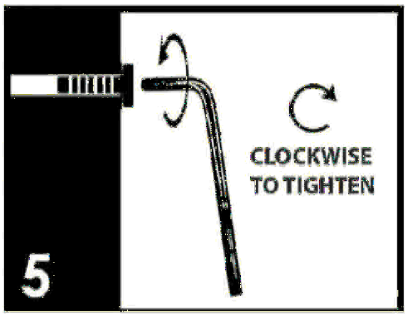

Make sure all parts are properly aligned, then use the appropriate hand tool to completely tighten the bolts or screws. Do not use power tools and do not overtighten.

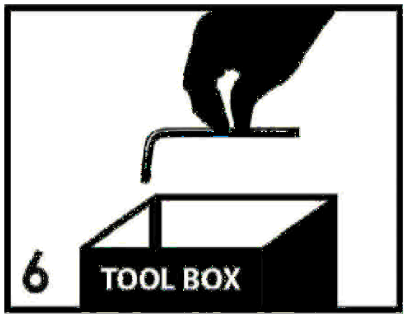

Save the instructions and store the Allen wrench or any supplied tool for later maintenance. After two weeks, check and tighten any loose hardware and repeat again every six months thereafter.

IT IS THE USER'S RESPONSIBILITY TO MAINTAIN THE FURNITURE.THE HARDWARE MAY LOOSEN OVER TIME AND MAY CAUSE THE FURNITURE TO BE WOBBLY AND UNABLE TO SUPPORT ITS INTENDED WEIGHT CAPACITY. THIS MAY LEAD TO COLLAPSE AND MAY CAUSE SERIOUS INJURY.

FAILURE TO FOLLOW THE GUIDELINES ABOVE MAY RESULT IN INJURY AND/OR PROPERTY DAMAGE.

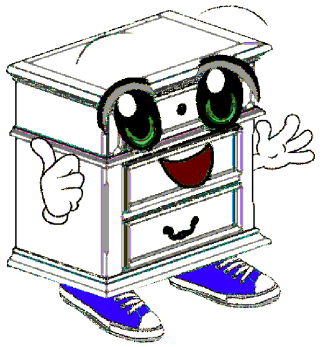

Before you begin, please read Page 2 of "Assembly and Care Advice".

And remember, do not tighten until each step is completed or instructed.

Parts List

	#1 x 1pc Back Stand (Left)
	#2 x 1pc Back Stand (Right)
	#3 x 1pc Front Stand (Left)
	#4 x 1pc Front Stand (Right)
	#5 x 1pc Upper horizontal
	#6 x 1pc Shelf 1
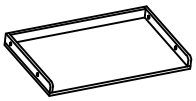	#7 x 1pc Shelf 2
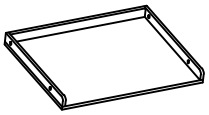	#8 x 1pc Shelf 3
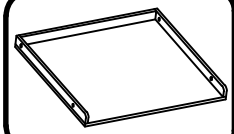	

Hardware List

	#A x 2pcs Bolt Ø1/4" x 2"
	#B x 2pcs Bolt Ø1/4" x 1-3/8"
	#C x 20pcs Bolt Ø1/4" x 1"
	#D x 1pc Allen Key 4mm
	#E x 2pcs Hook Up
	#F x 4pcs Screw #3 x 1/2"
	#G x 2pcs Dowel Ø8 x 1-1/4"
	#H x 2pcs Screw #3 x 15mm
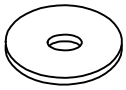	#I x 4pcs Flat Washer Ø4 x 10mm

Parts List

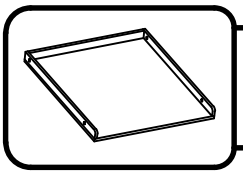

#10 x 1pc
Shelf 5

Hardware List

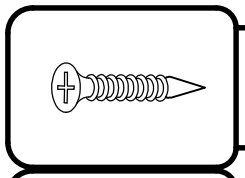

#J x 2pcs
Screw #3.5 x 20mm

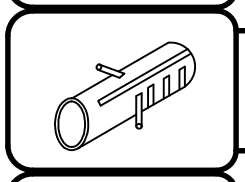

#K x 2pcs
Tox

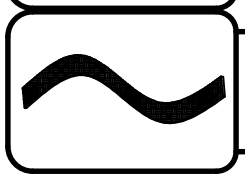

#L x 2pcs
Fabric

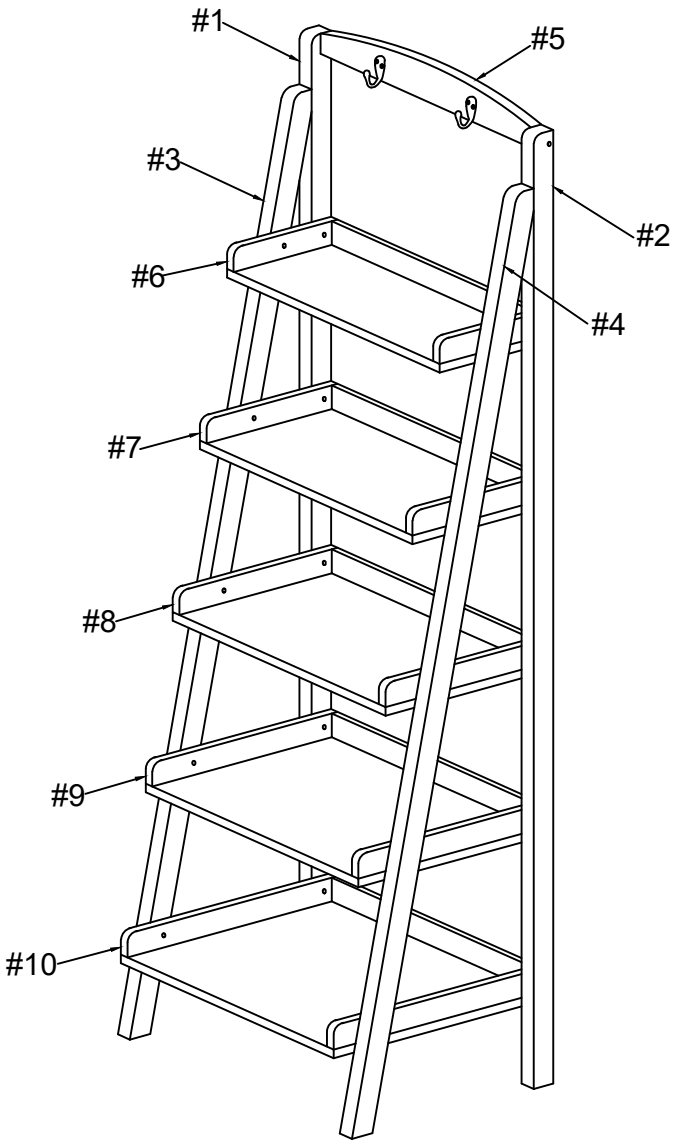

#A x 1pc

Align back stands (#1,3) together, then secure by using bolts (#A).

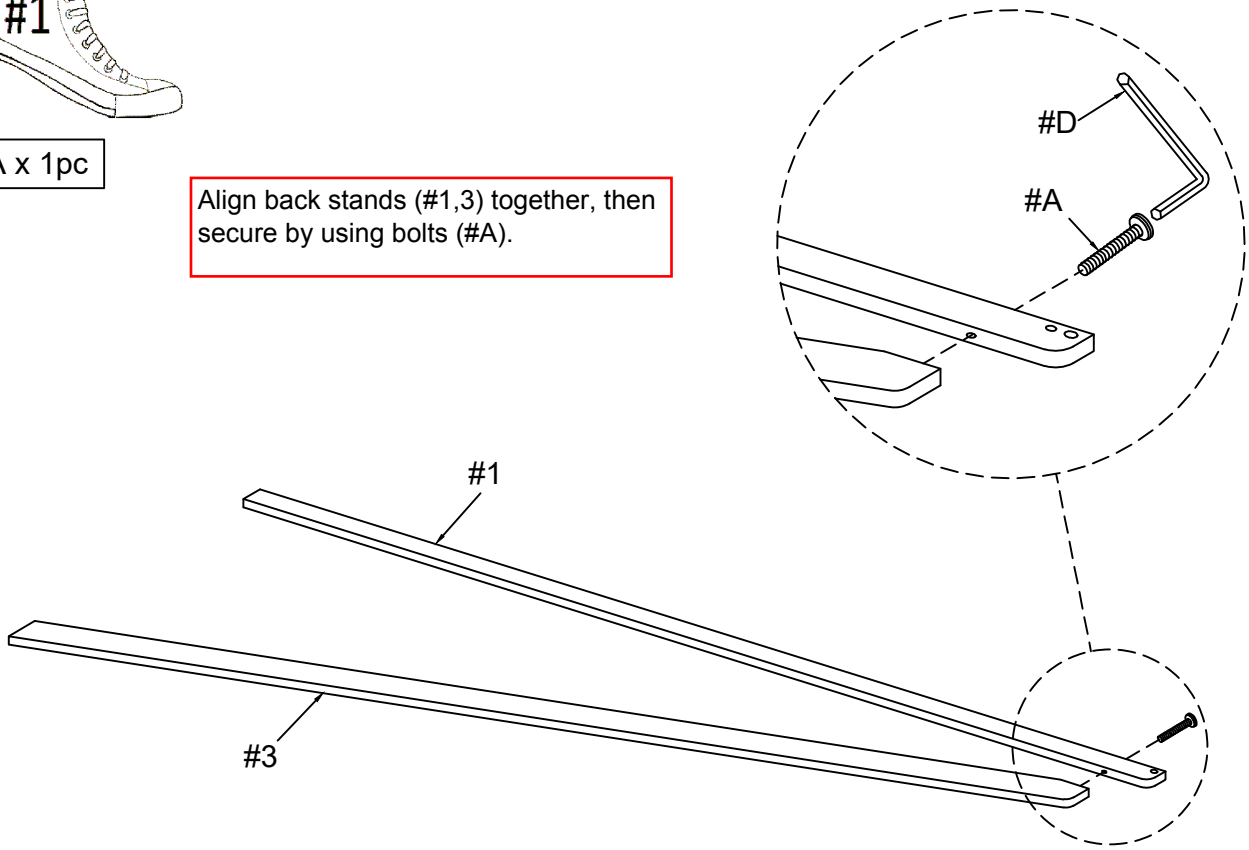

#A x 1pc

Align back stands (#2,4) together, then secure by using bolts (#A).

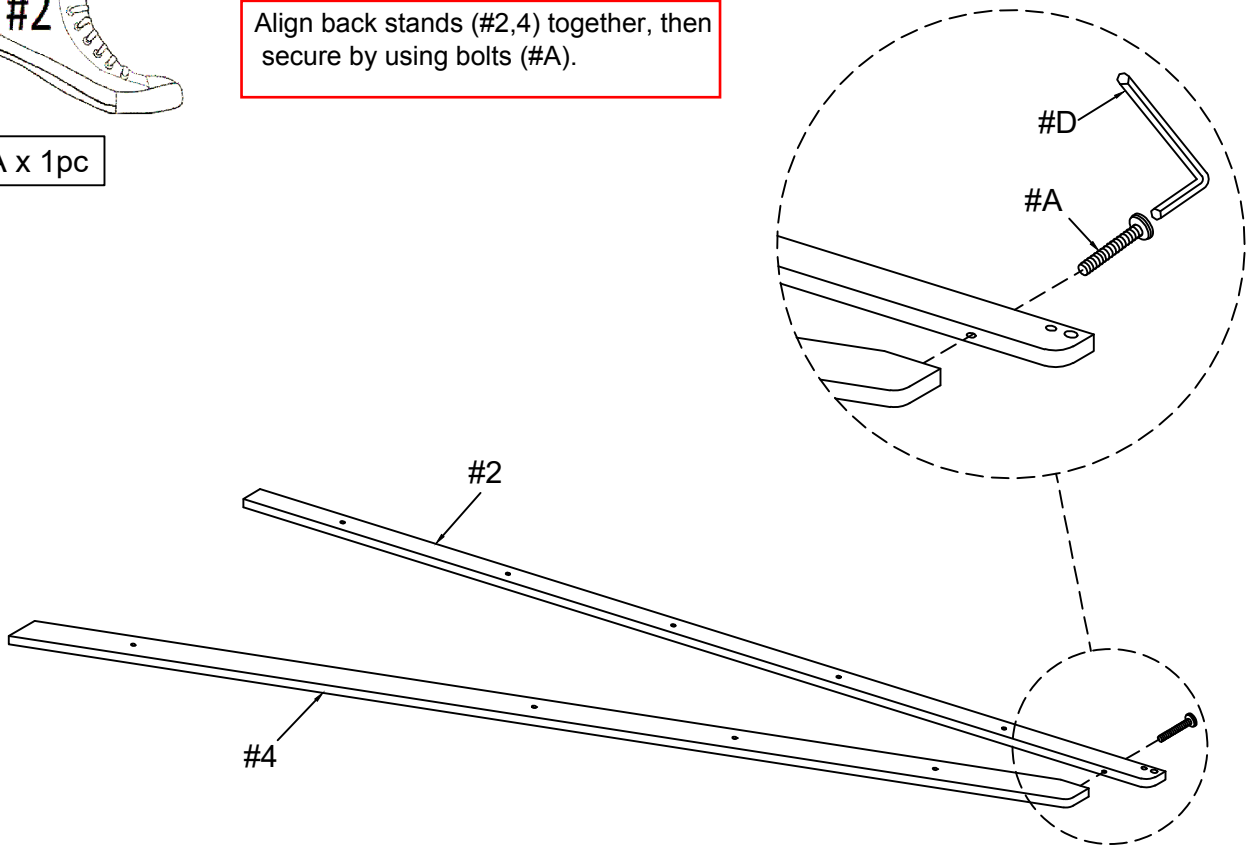

Align hooks (#E) to panels (#5), then secure by using screws (#F).

#E x 2pcs
#F x 4pcs

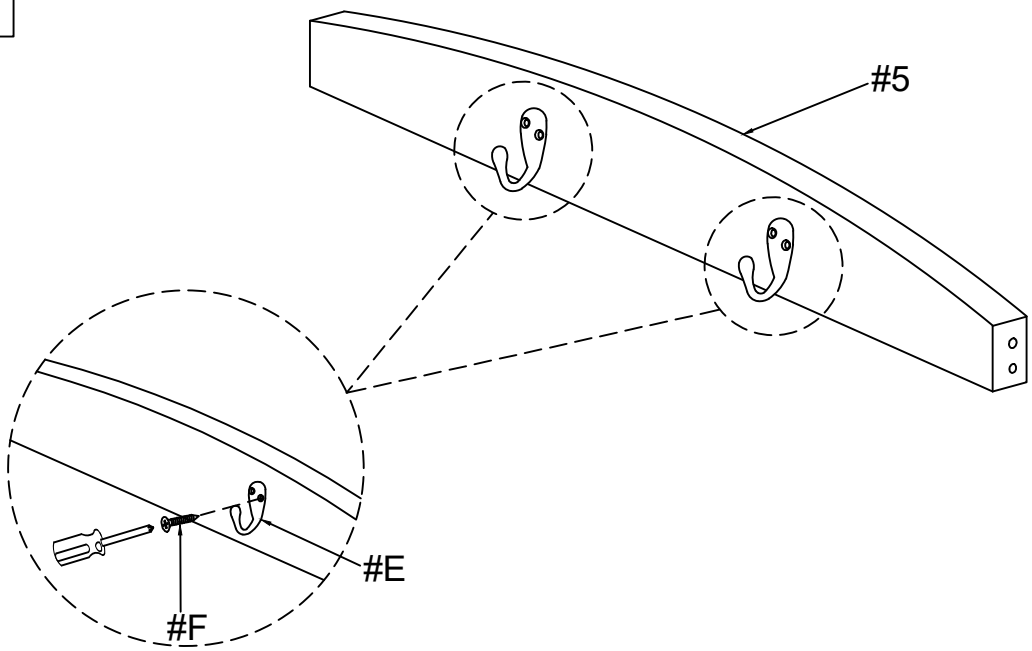

Align shelves (#6,7,8,9,10) to the back stands (#1,3), then secure by using bolts (#C).

#C x 10pcs

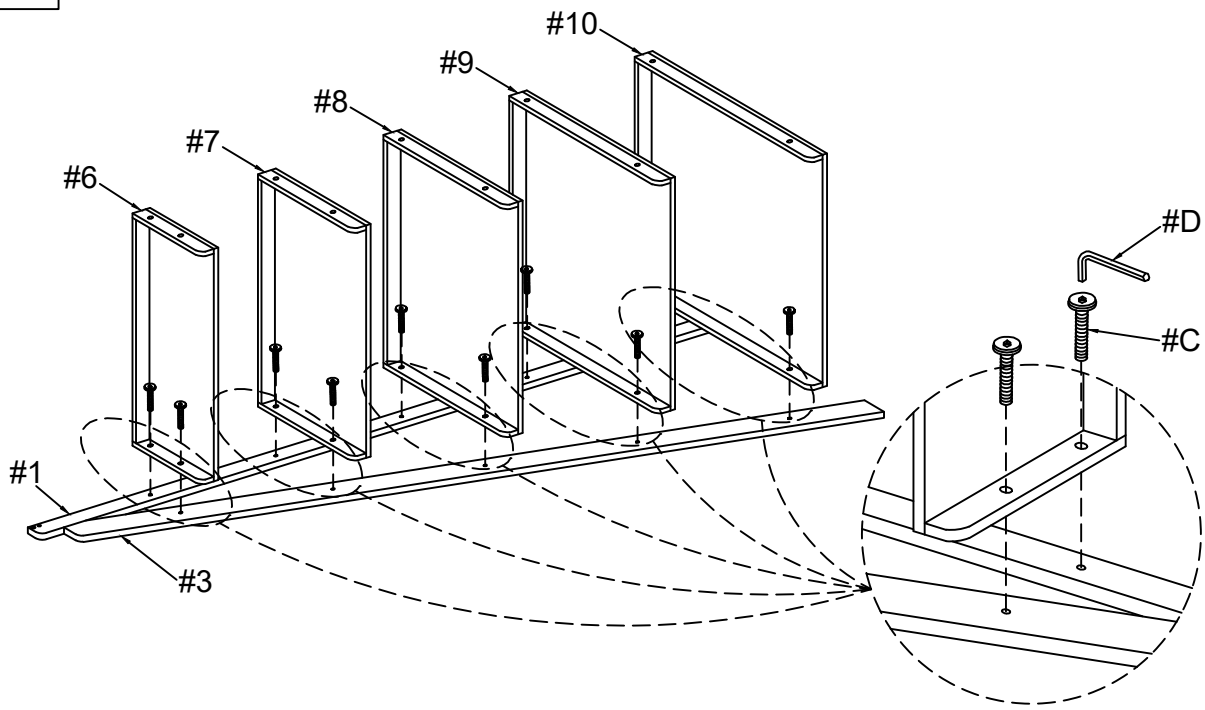

Align back stands (#2,4) and panel (#5) to the shelves and back stands (#1,3), then secure by using bolts (#C).

#C x 10pcs
#G x 2pcs

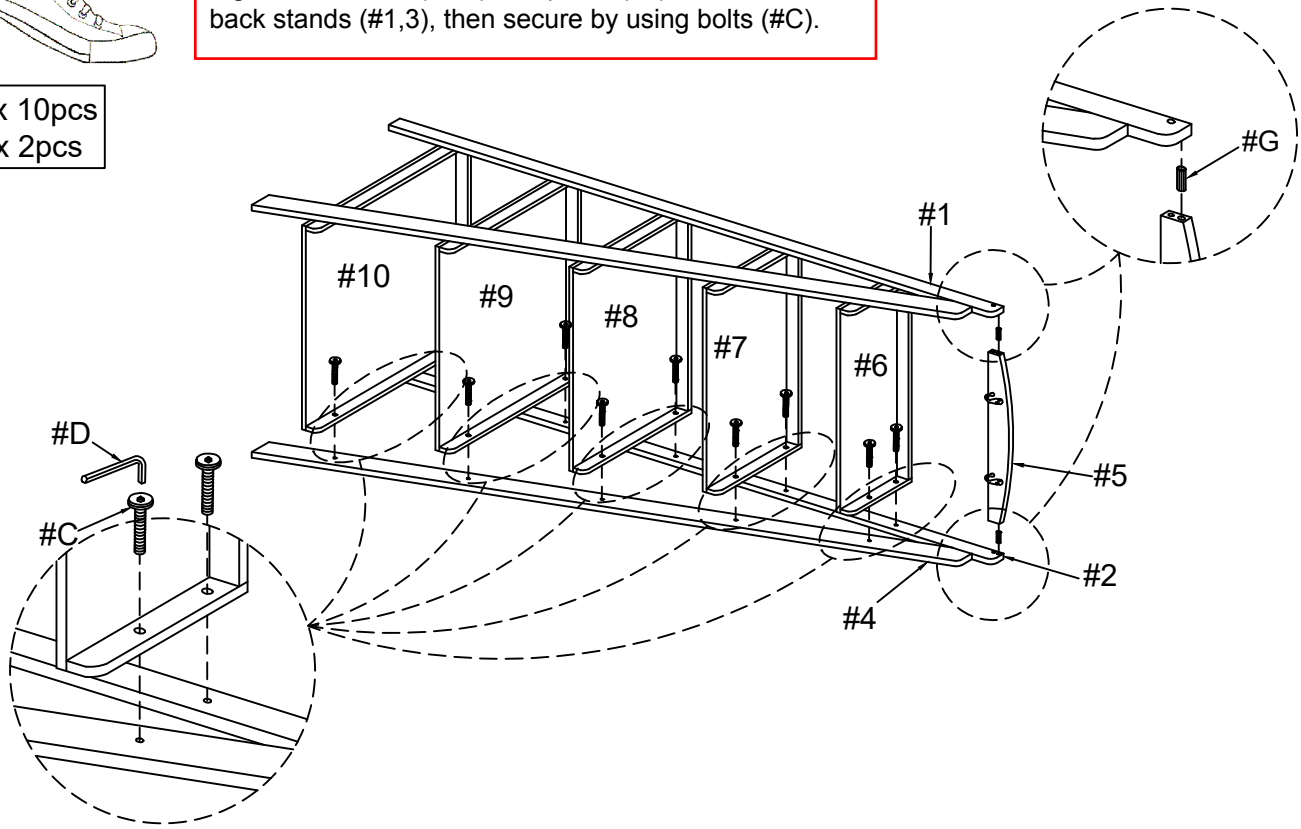

Secure panels (#5) by using bolts (#B).

#B x 2pcs

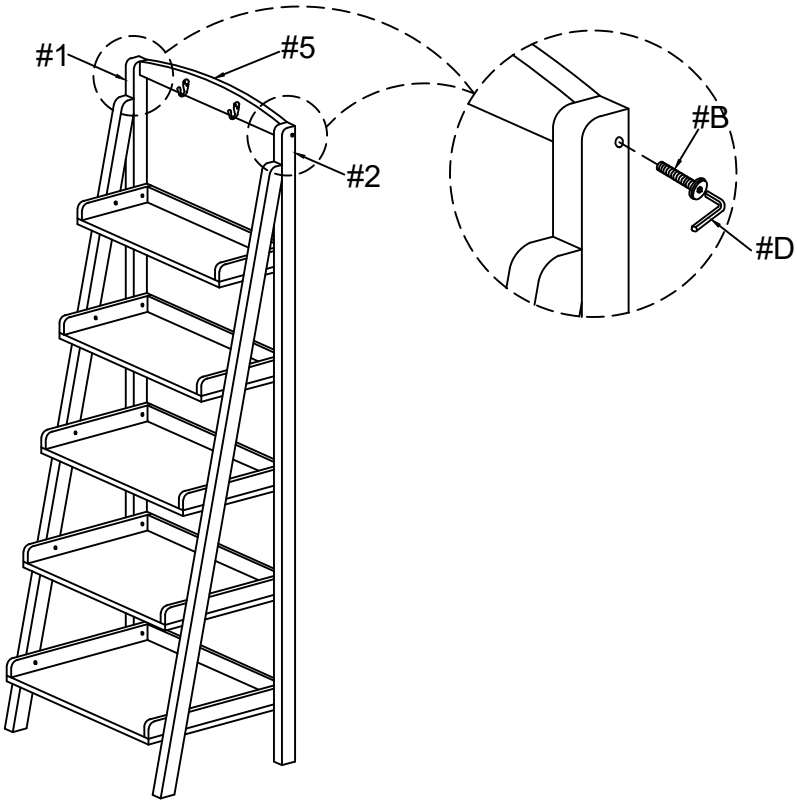

#H x 2pcs
#I x 4pcs
#J x 2pcs
#K x 2pcs
#L x 2pcs

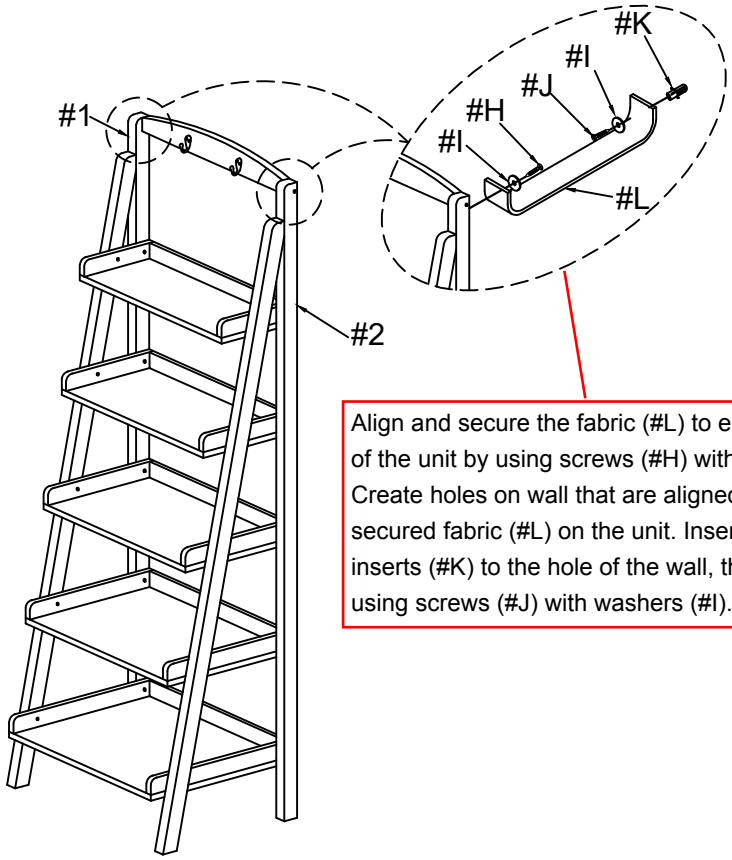

Align and secure the fabric (#L) to each back ends of the unit by using screws (#H) with washers (#I). Create holes on wall that are aligned to the secured fabric (#L) on the unit. Insert plastic inserts (#K) to the hole of the wall, then fabric by using screws (#J) with washers (#I).

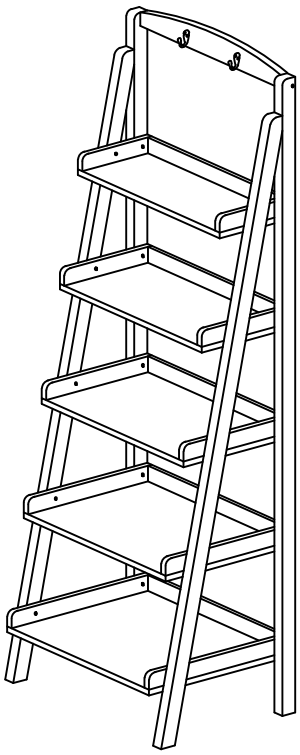

ASSEMBLY IS COMPLETED