TIPS:

Your suggestions and comments are really important to us!
We sincerely solicit you to go back to our shop and leave a good rating in just a simple click. It would be quite encouraging if you could kindly do so like below:

★★★★★ **Great products so far**
February 24, 2018
Great product so far. Fast delivery, easy setup, and working without any issues.

With your inspiring rating, will be more consistent to offer you
EASY SHOPPING EXPERIENCE, GOOD PRODUCTS and EFFICIENT SERVICE!

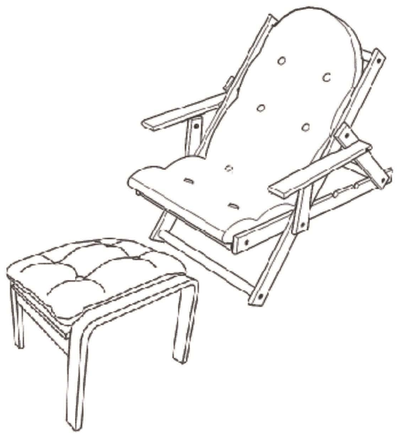

USER'S MANUAL
Lounge Chair

PRODUCT ASSEMBLY

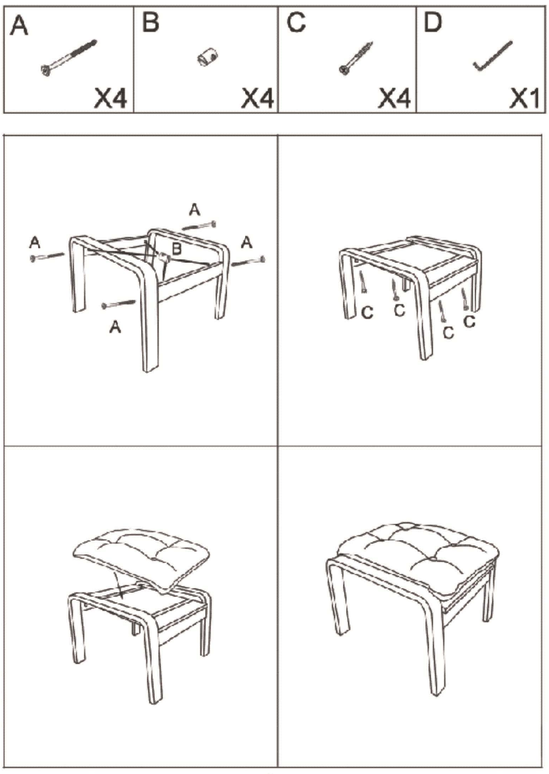

PRODUCT ASSEMBLY

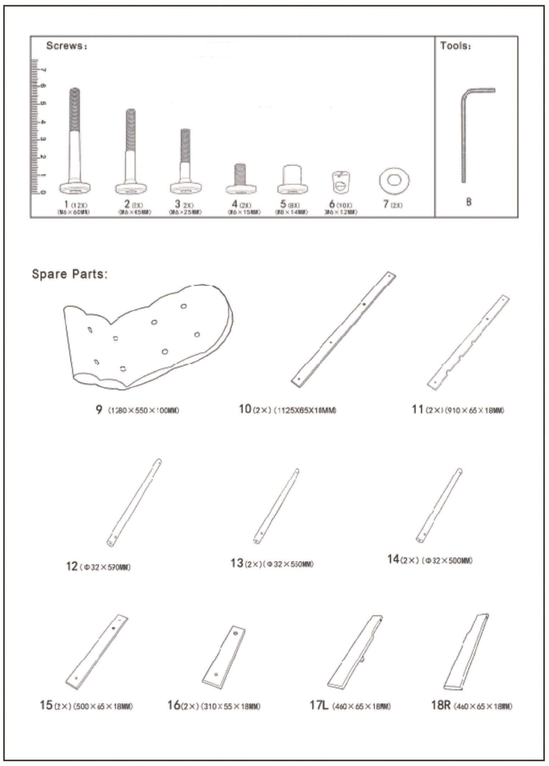

PRODUCT ASSEMBLY

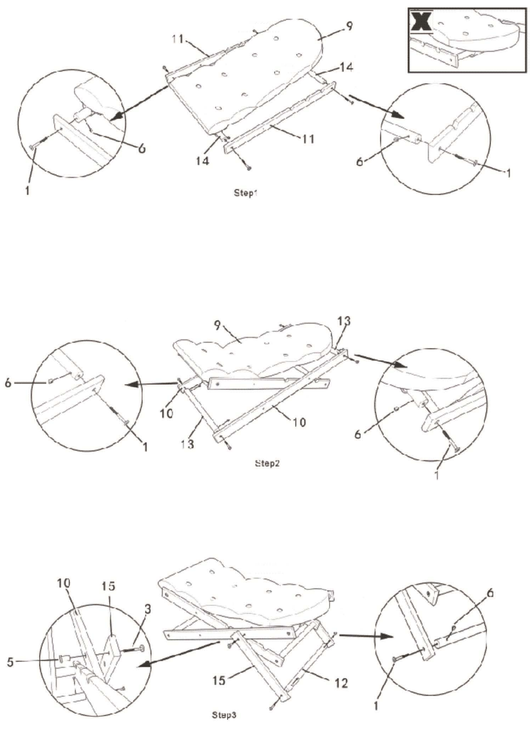
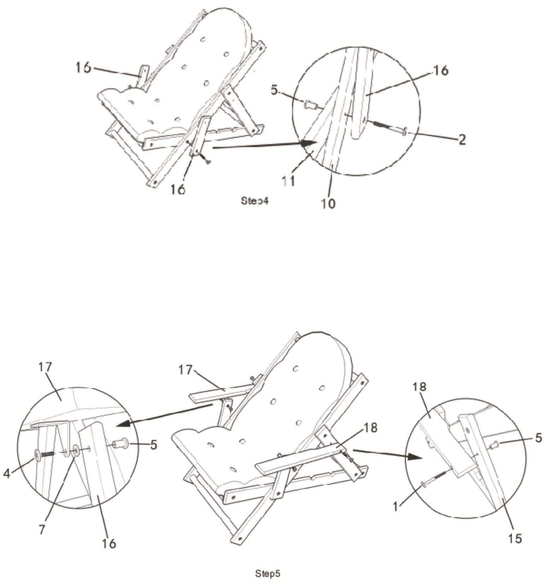
PRODUCT ASSEMBLY