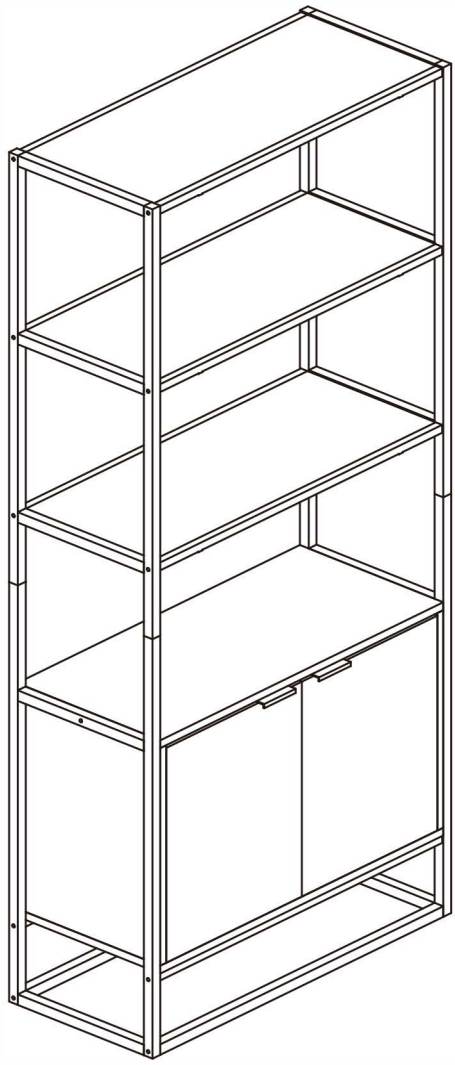

Please read these instructions and warranty information carefully before use and keep them properly for future reference.

OPERATING INSTRUCTIONS

Assembling Instruction

Attention:Do not tighten the screws until all of them are in right positions

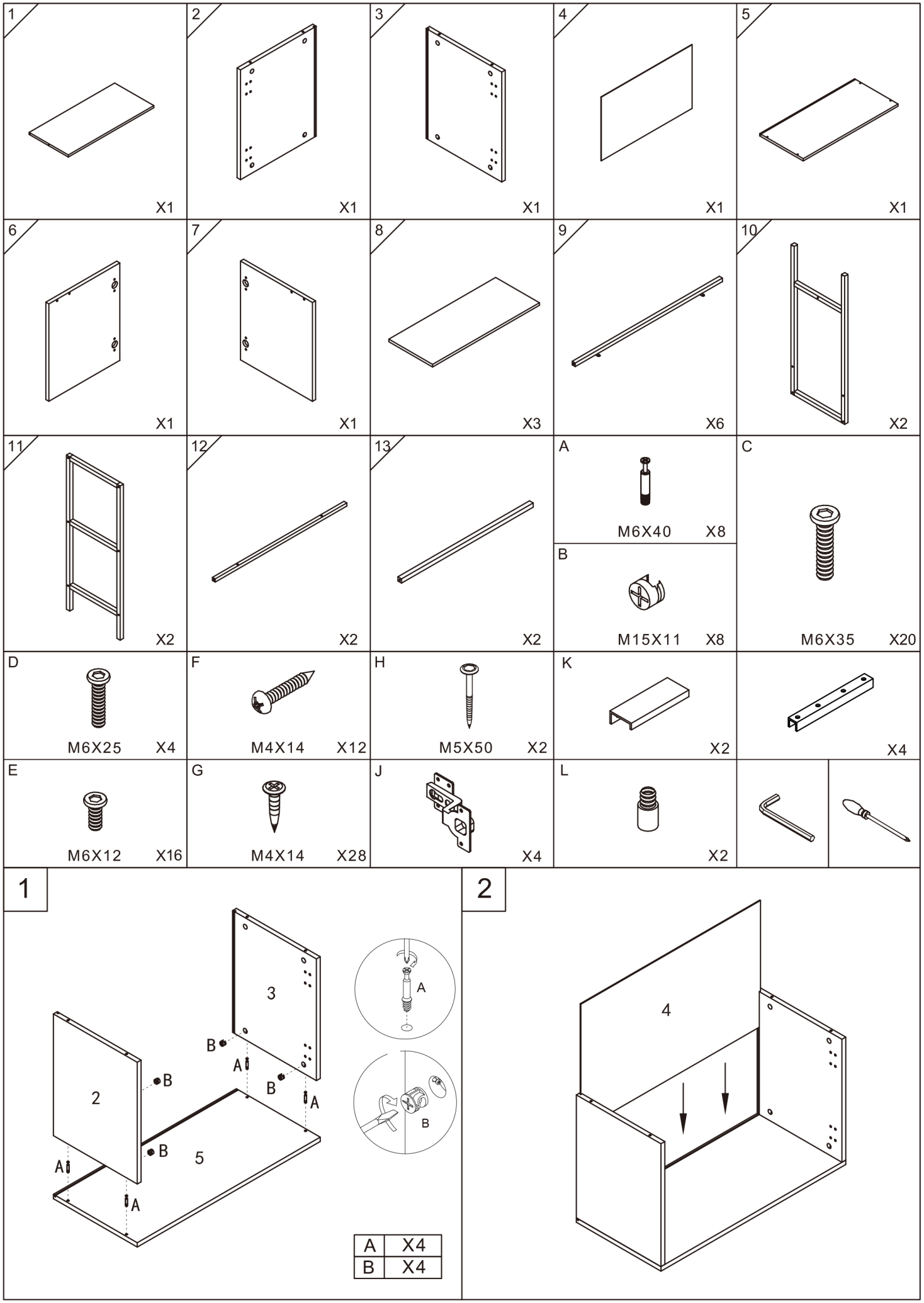

3

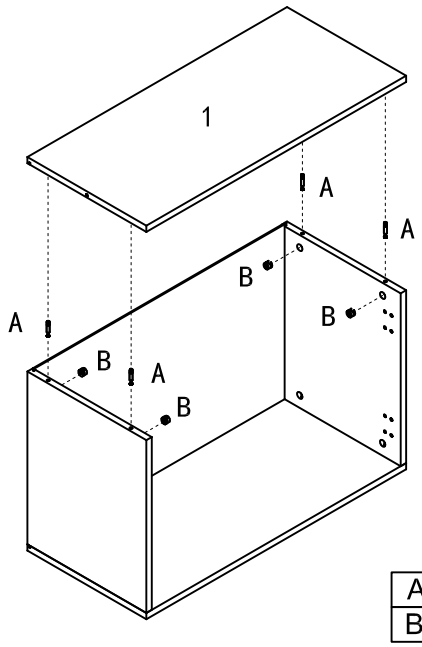

A	X4
B	X4

4

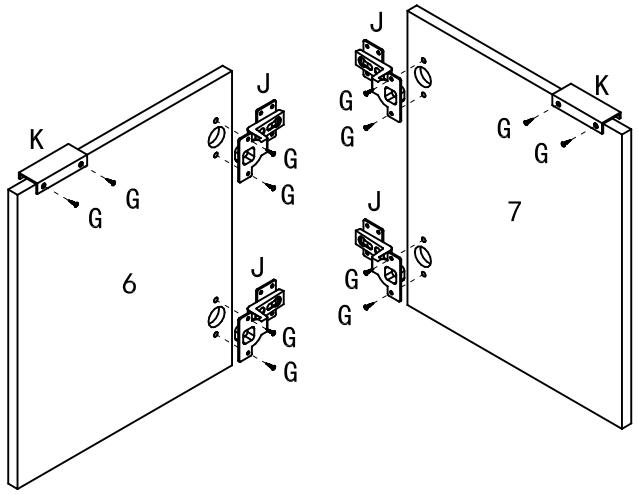

G	X12
J	X4
K	X2

5

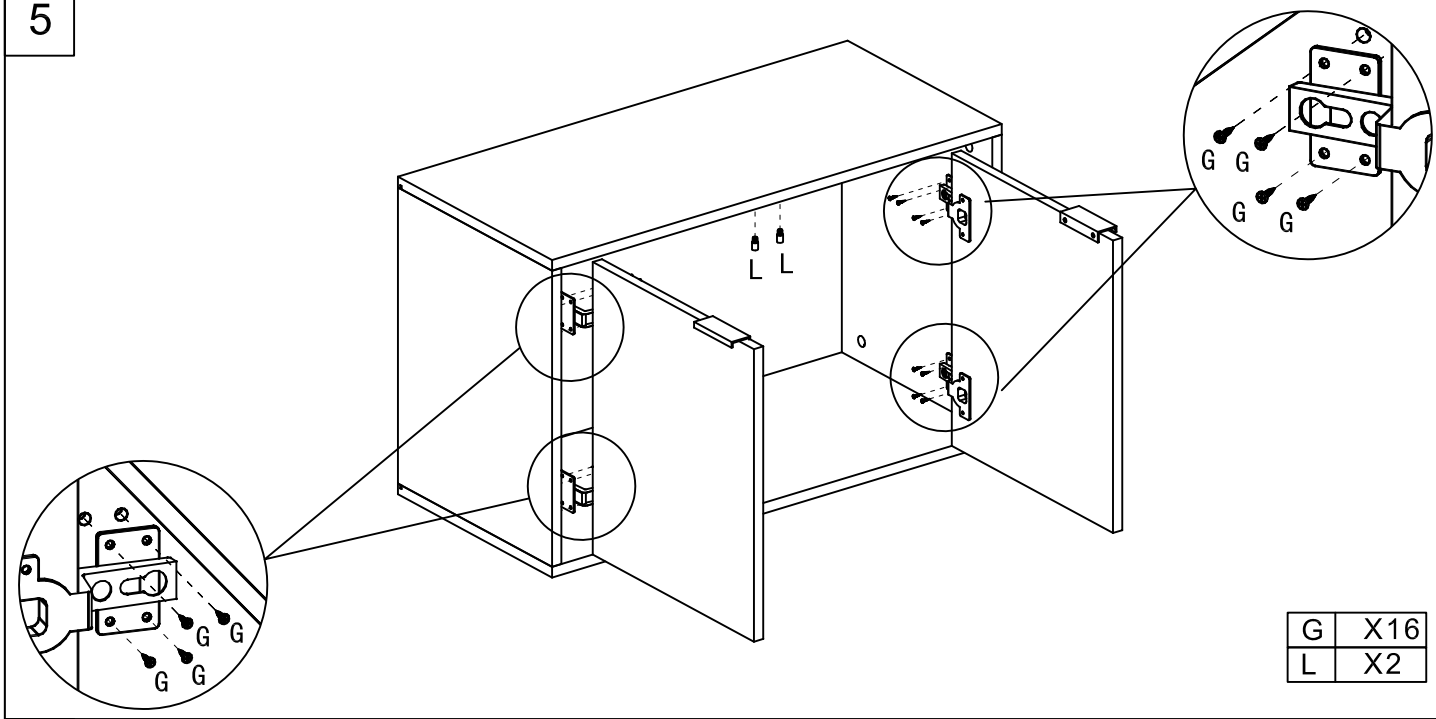

G	X16
L	X2

6

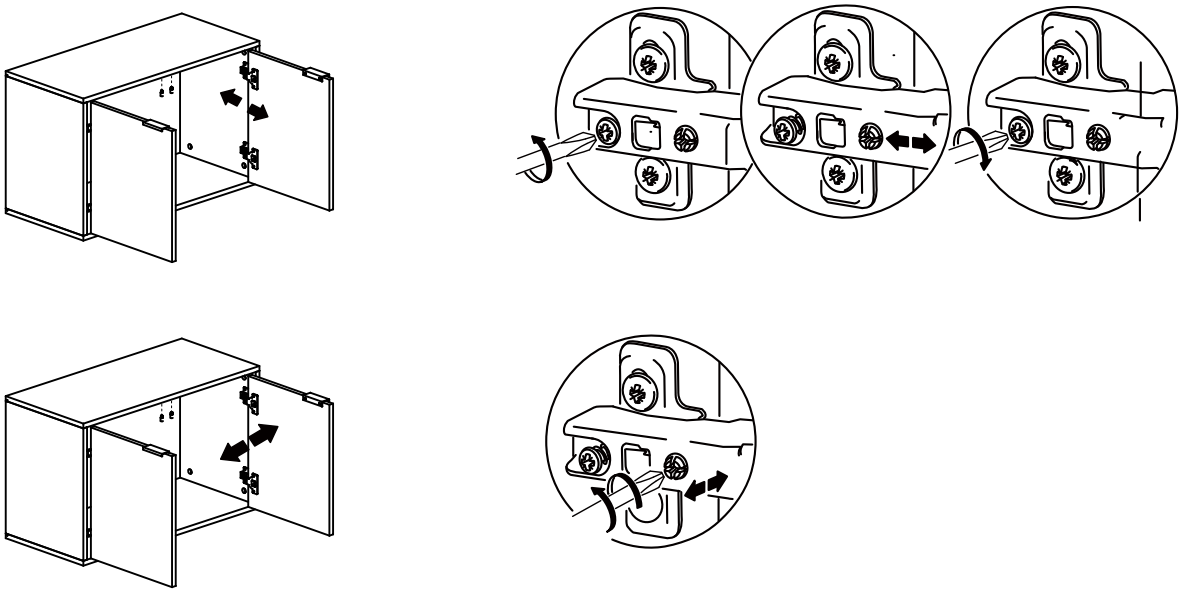

7

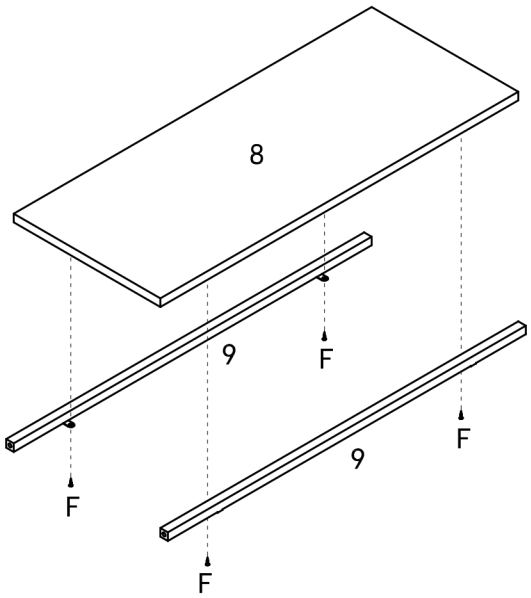

X3

F	X12

8

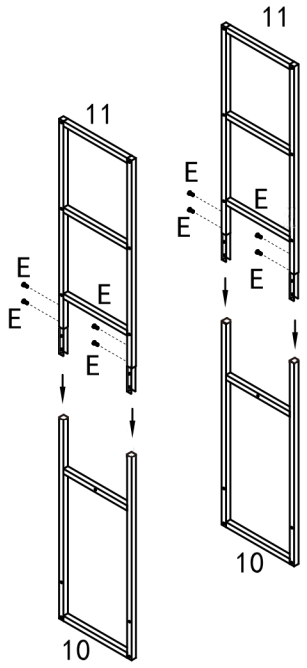

E	X 8
	X 4

9

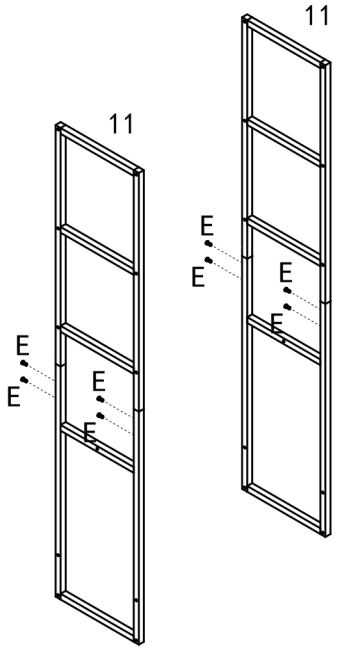

E	X 8

10

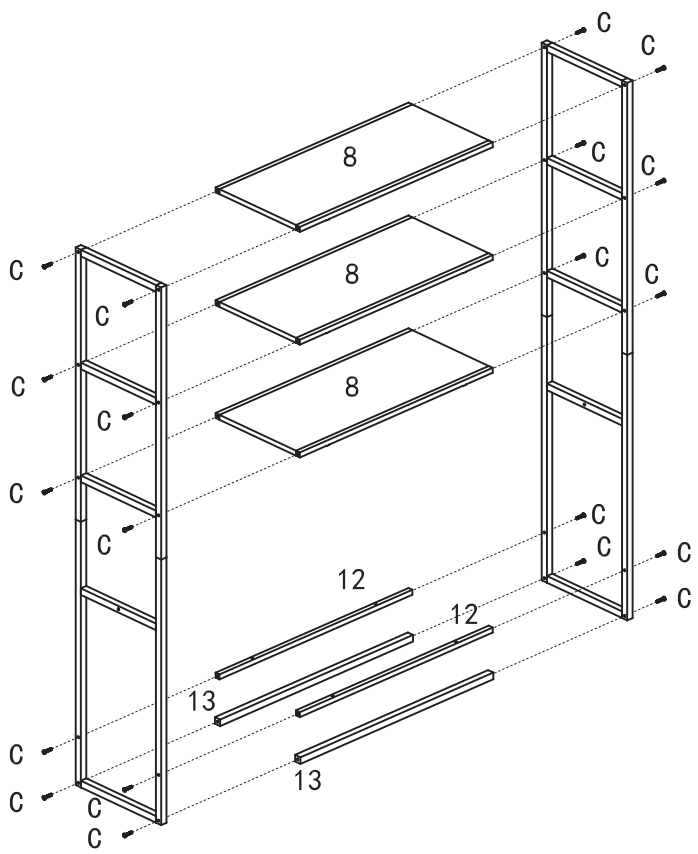

C	X20

11

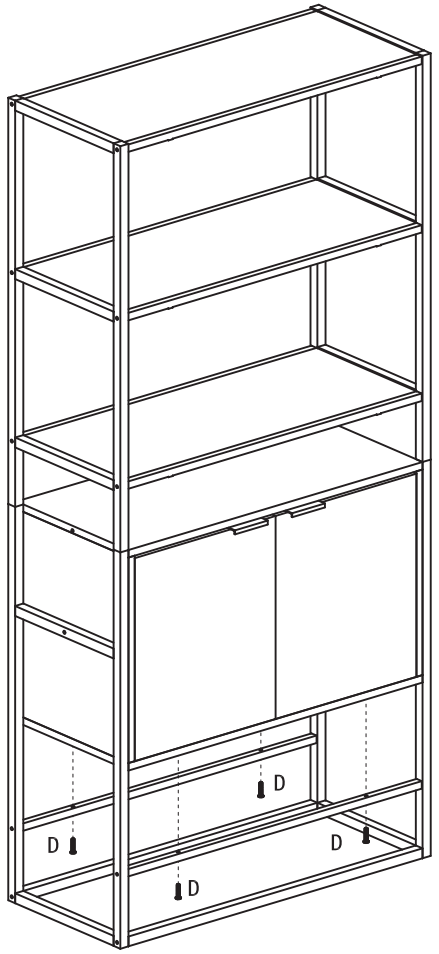

D	X4

12

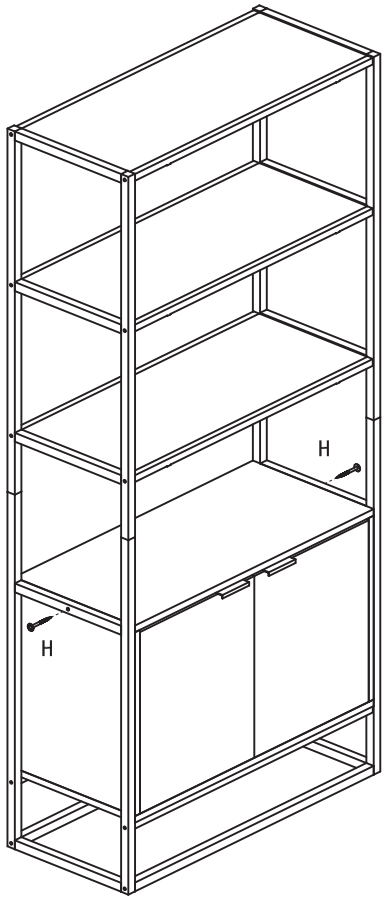
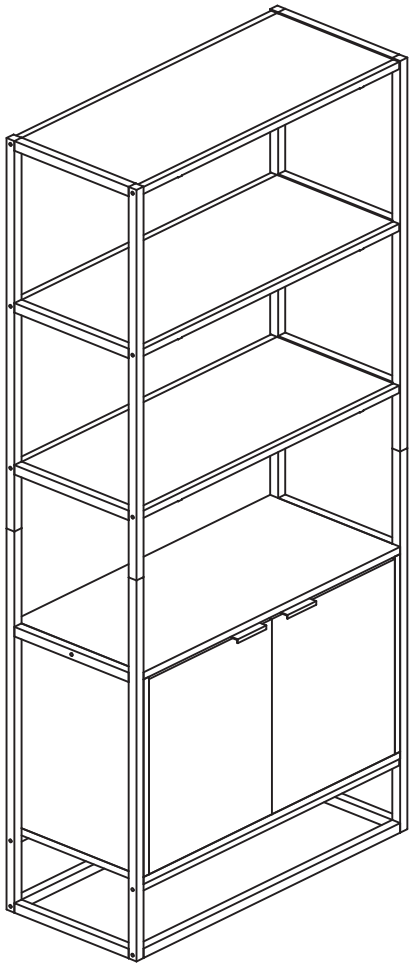
H	X2