Thanks for choosing our goods. Before Install the goods must read carefully on our install manual or check our install video on our shop. If still have install problem or other things can contact our after-sales team

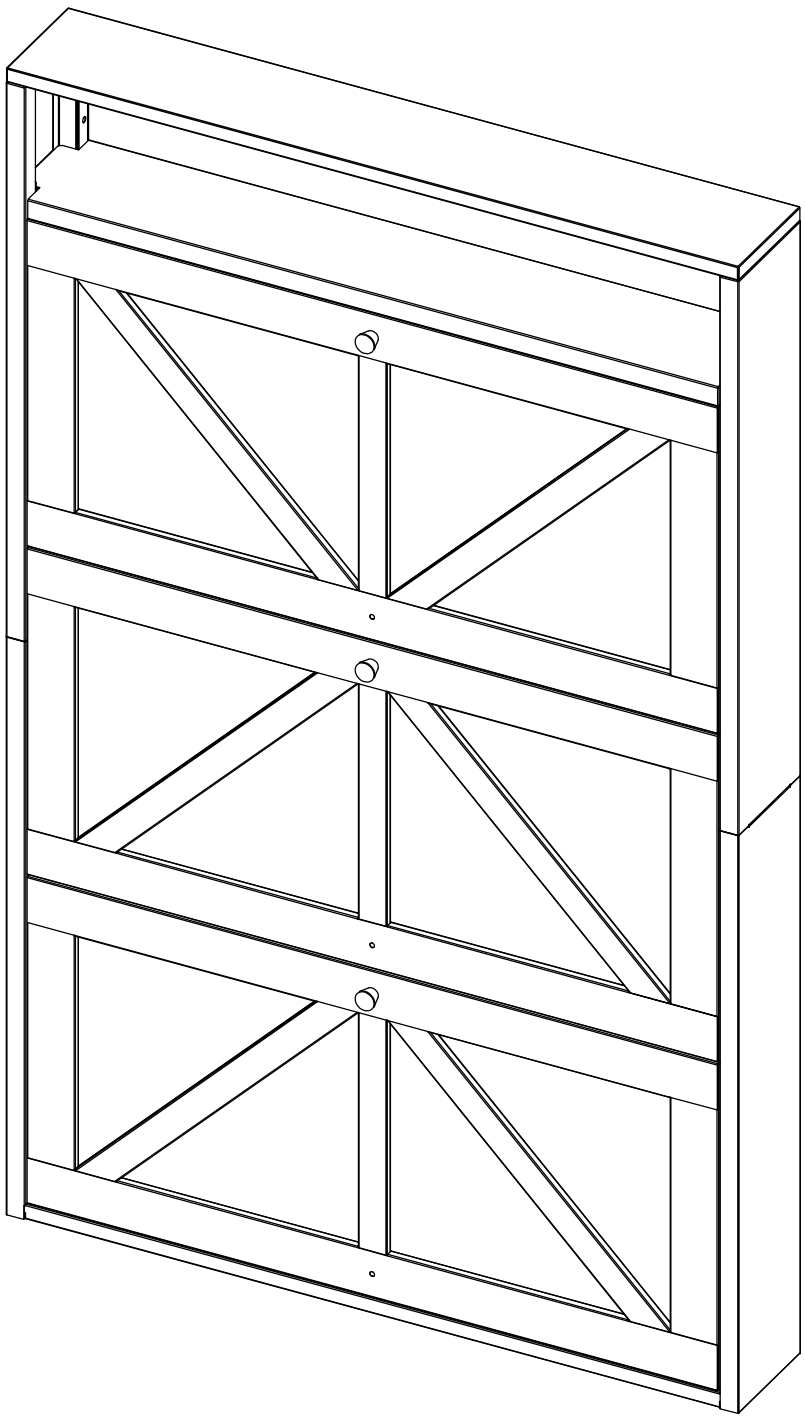

Please scan the QR code to check the assemble video

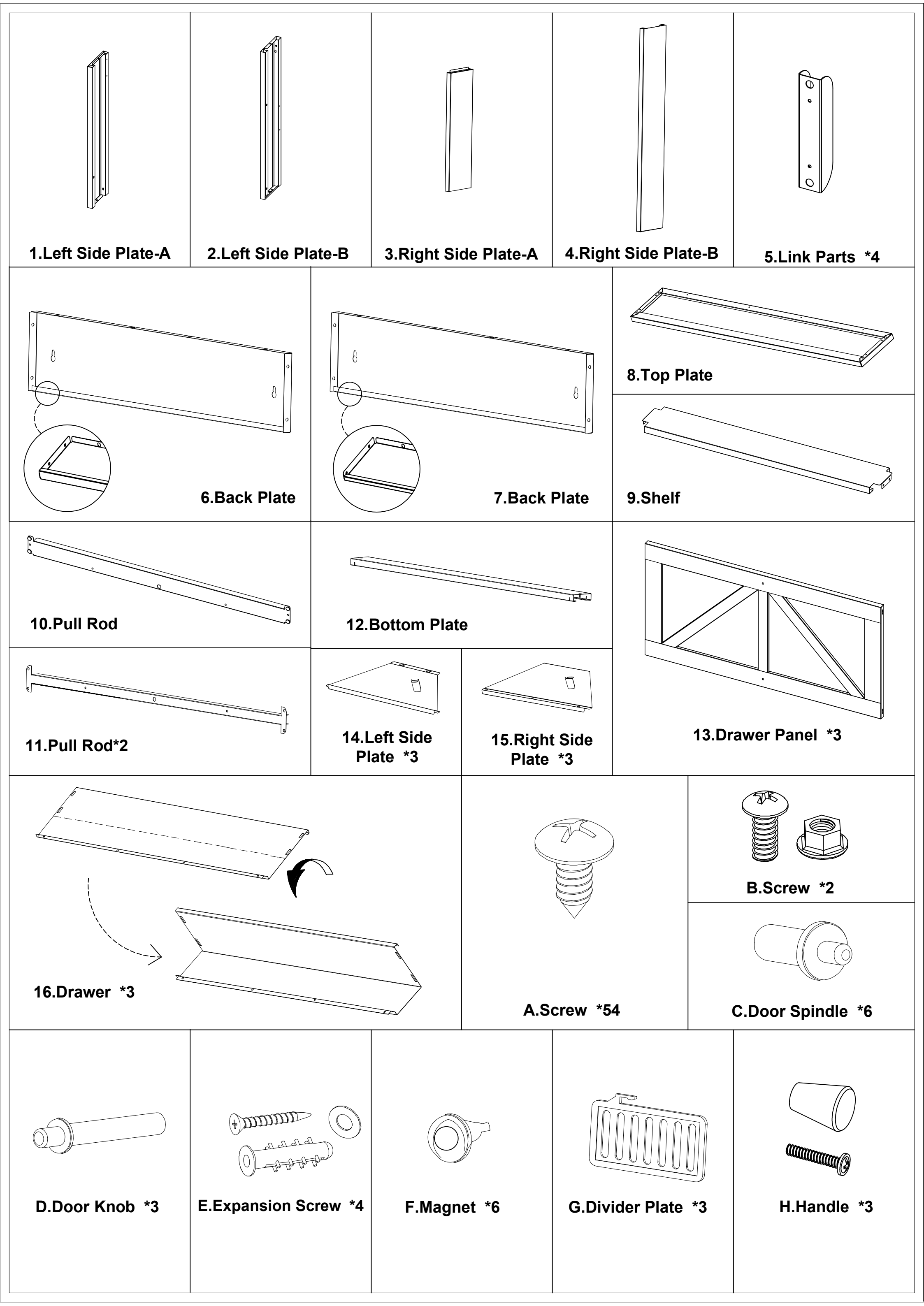
1.Left Side Plate-A
2.Left Side Plate-B
3.Right Side Plate-A
4.Right Side Plate-B
5.Link Parts *4
6.Back Plate
7.Back Plate
8.Top Plate
9.Shelf
10.Pull Rod
12.Bottom Plate
13.Drawer Panel *3
11.Pull Rod*2
14.Left Side Plate *3
15.Right Side Plate *3
16.Drawer *3
A.Screw *54
B.Screw *2
C.Door Spindle *6
D.Door Knob *3
E.Expansion Screw *4
F.Magnet *6
G.Divider Plate *3
H.Handle *3

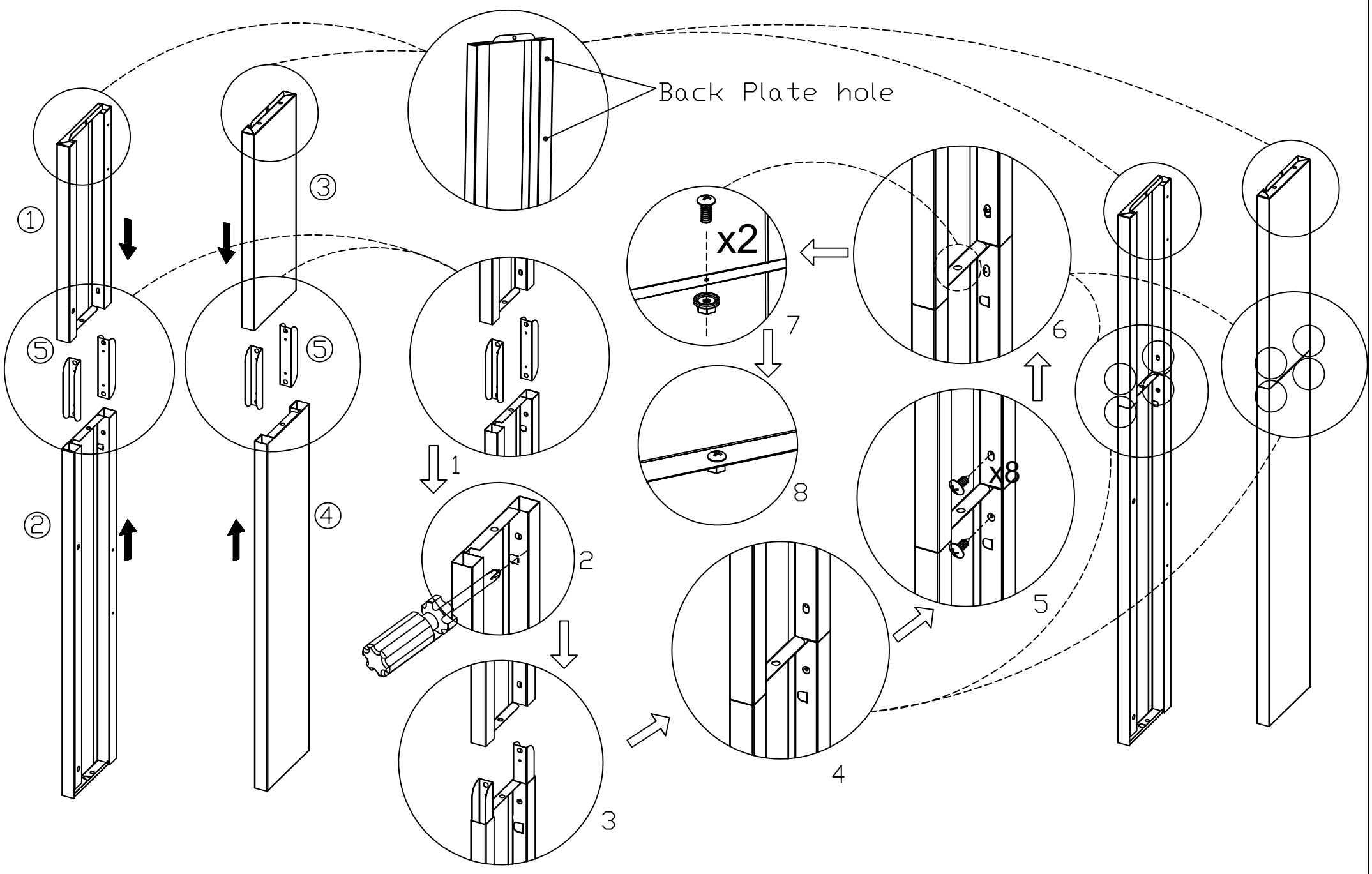

1. Open the baffles on 2 and 4. Assemble 1(3), 2(4) and 5, secure with screws A and B

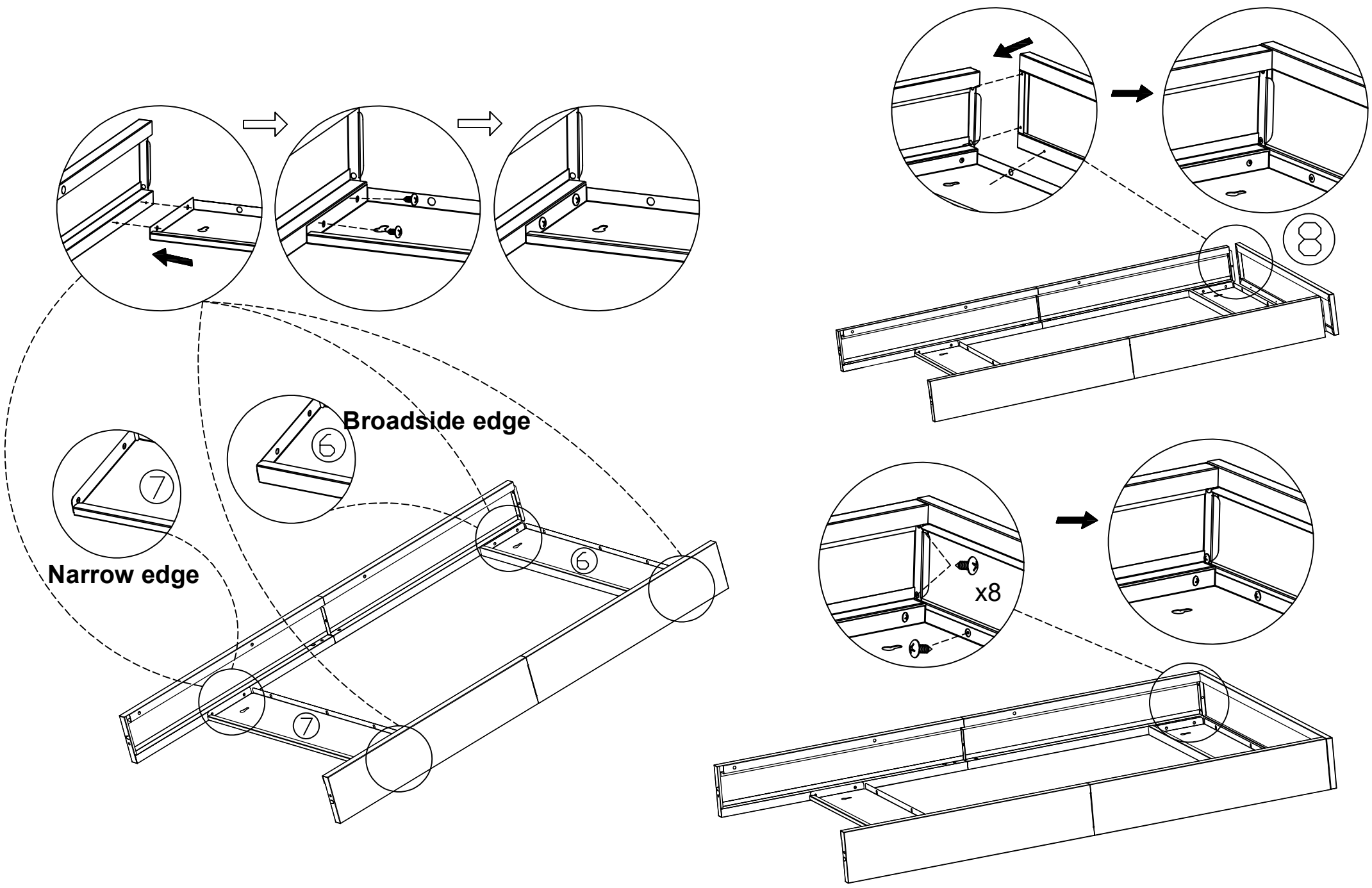

2. Install 6,7 and 8, secure it with screw A

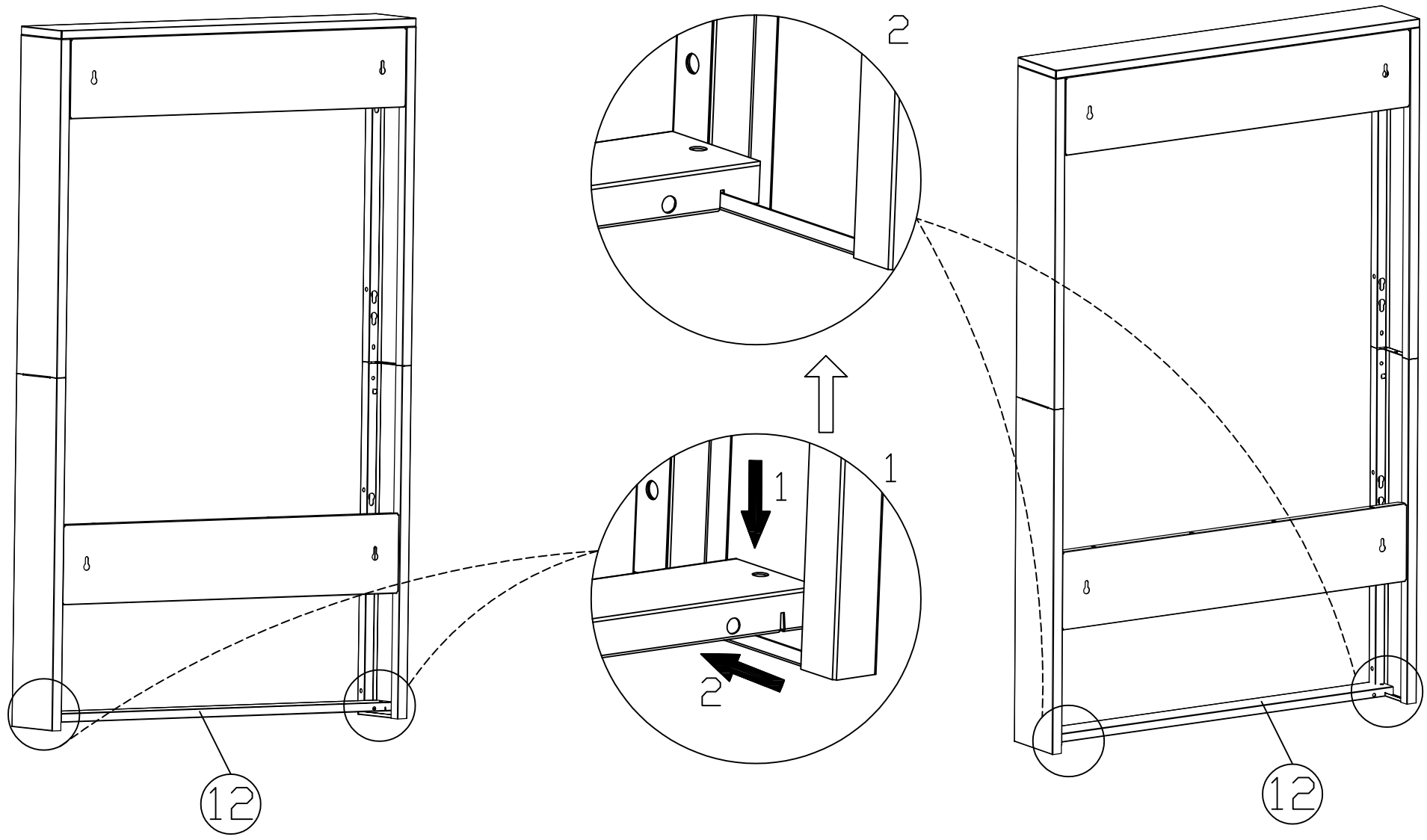

3. Install 12

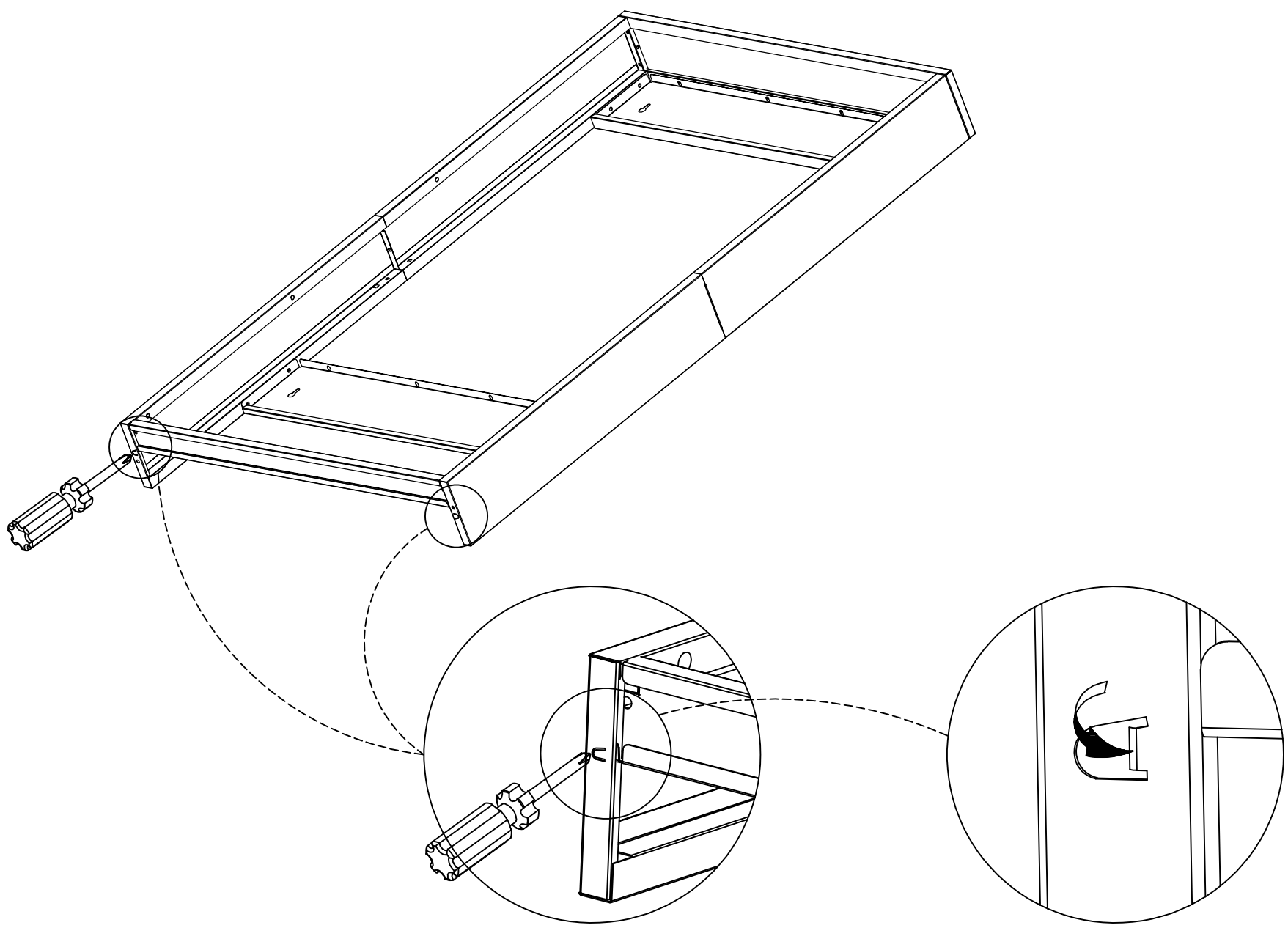

4. Open the baffles on 2 and 4.

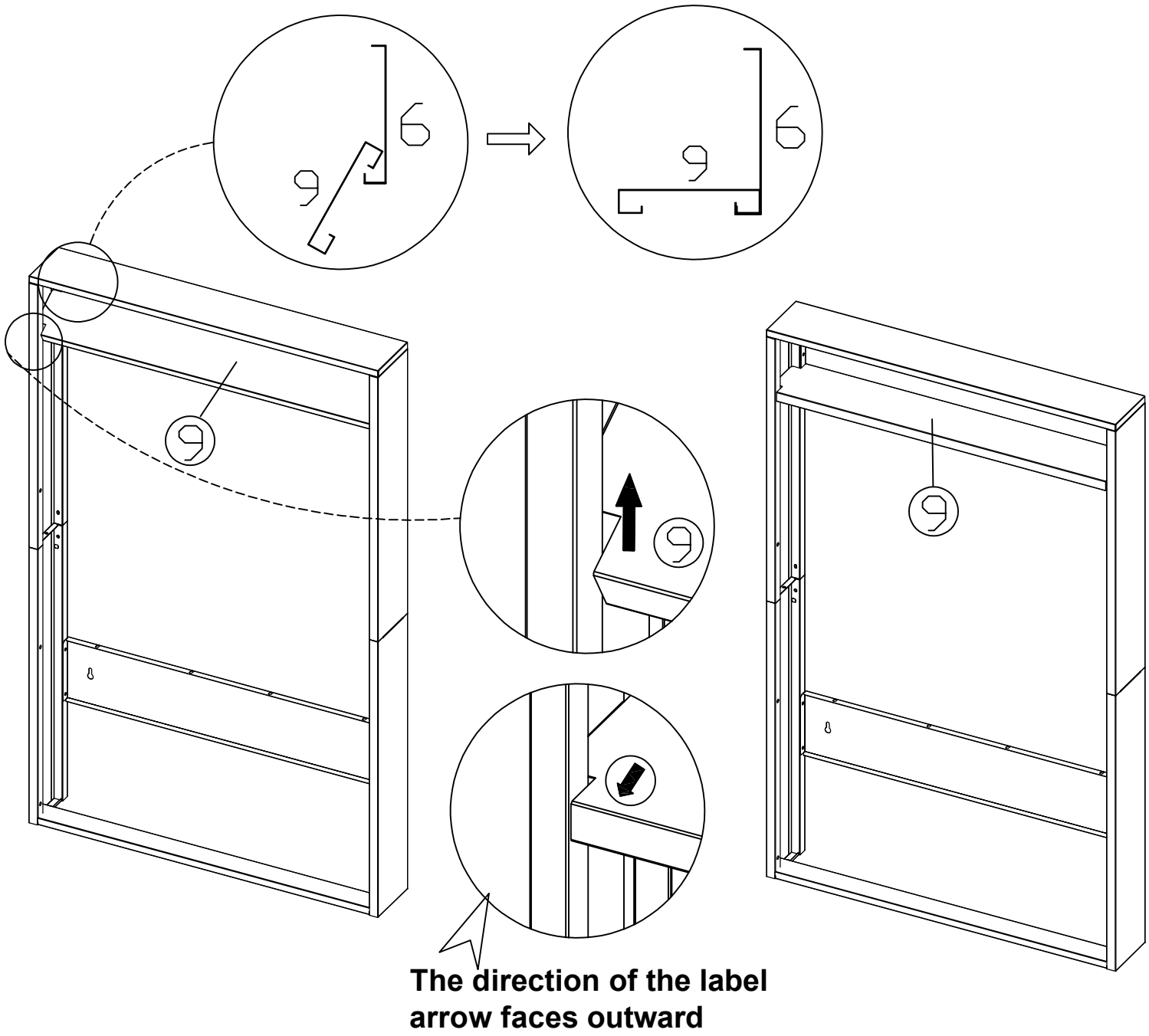

5. Install 9, Note the direction of the label arrows

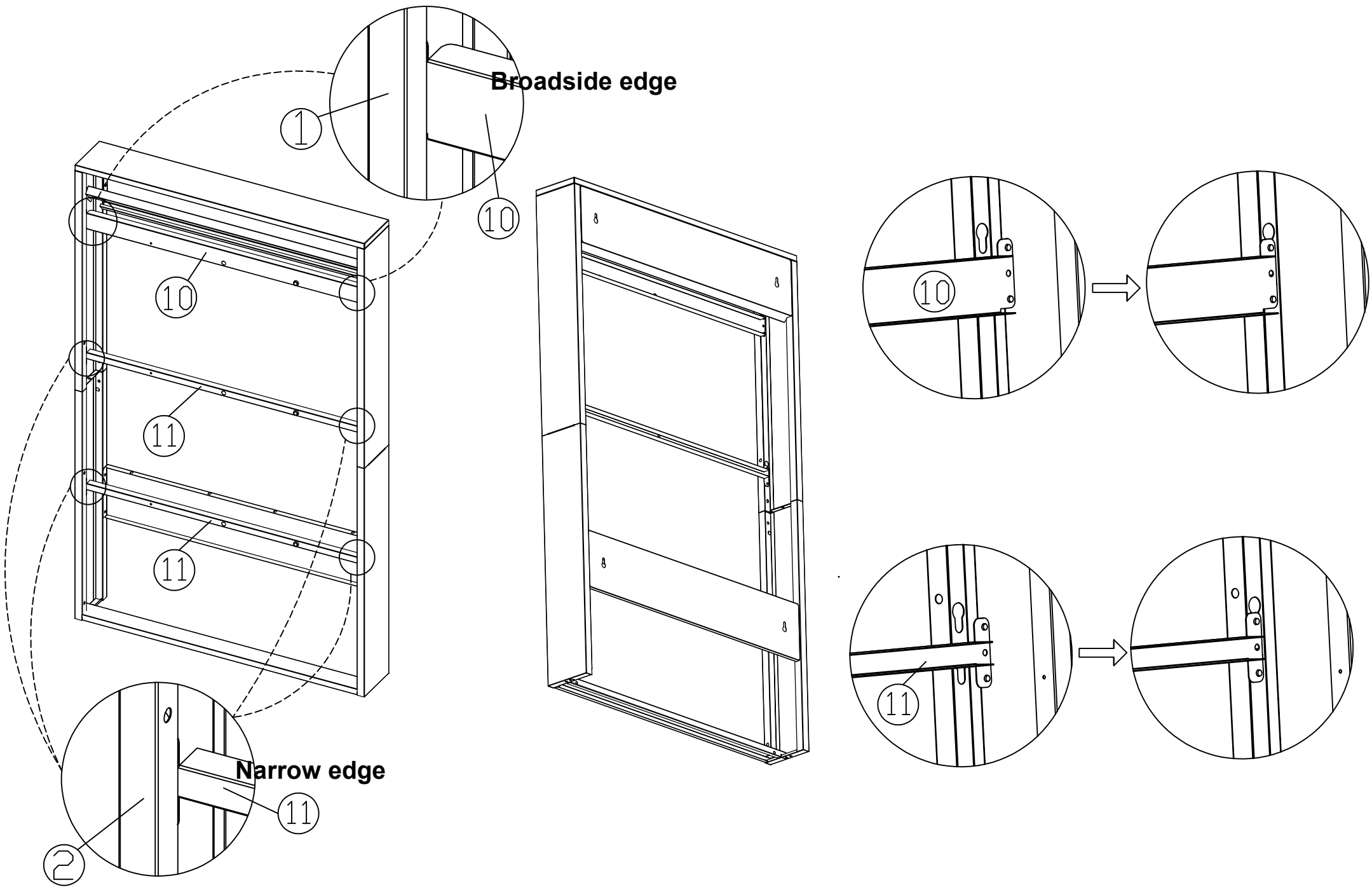

6. Install 10 and 11

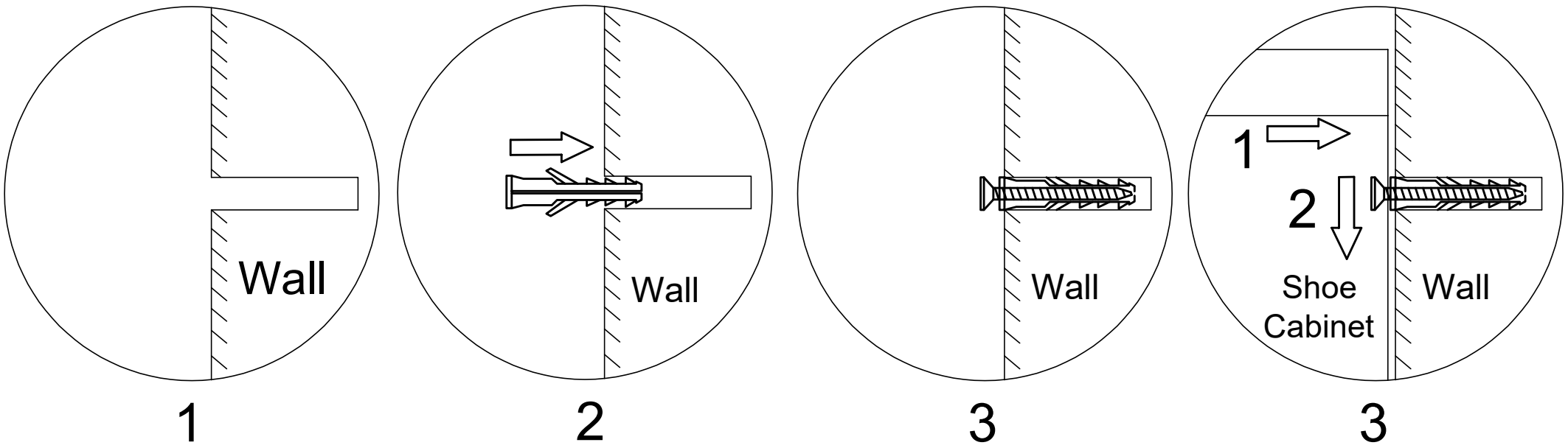

1. Drill holes in the corresponding positions on the wall

2. Install E in the hole

3. Install screw E

4. Hang the shoe cabinet on E

7. Shoe cabinet mounted on wall

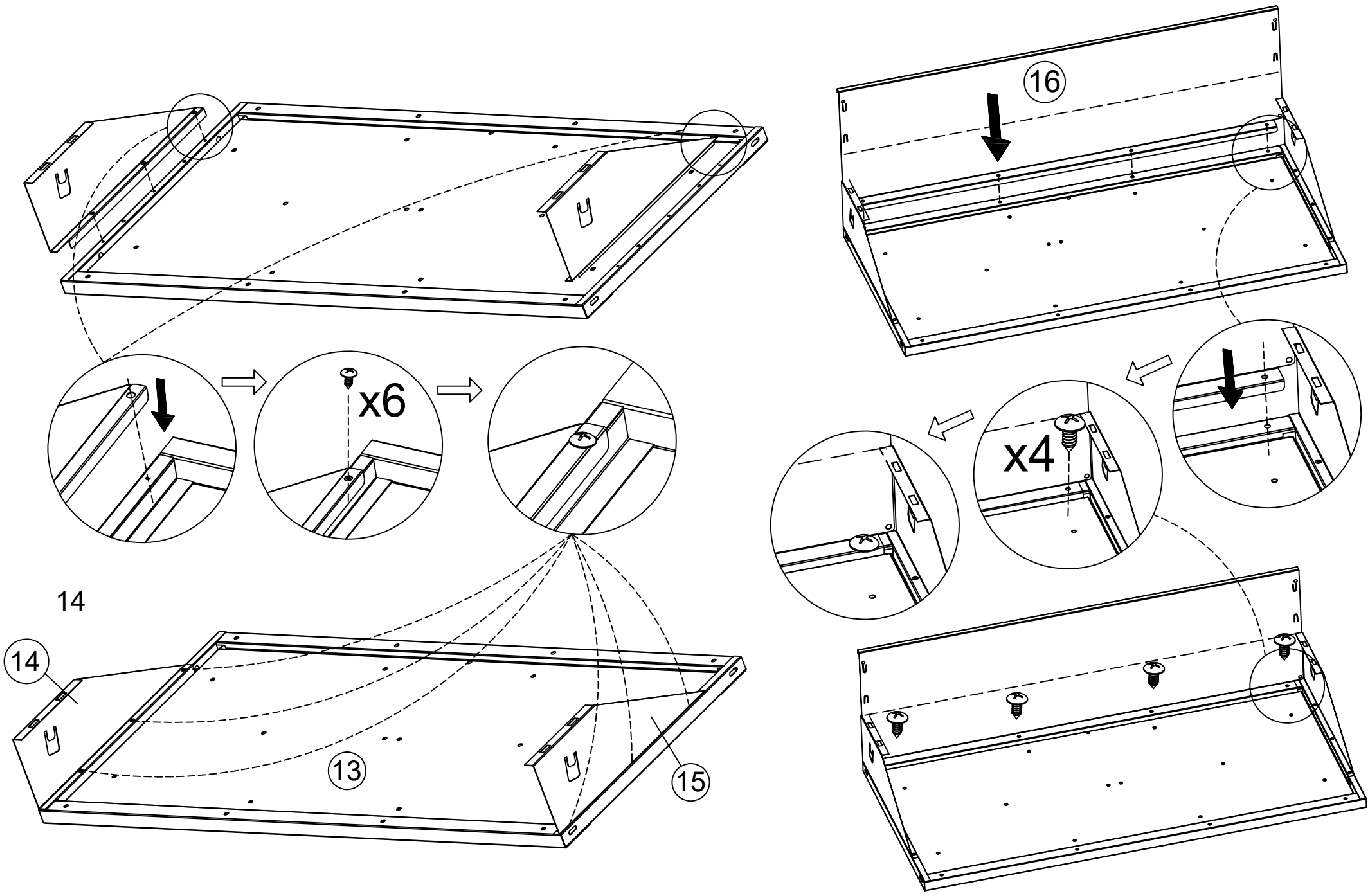

8. Assemble 13, 14, 15 and 16, secure with screws A

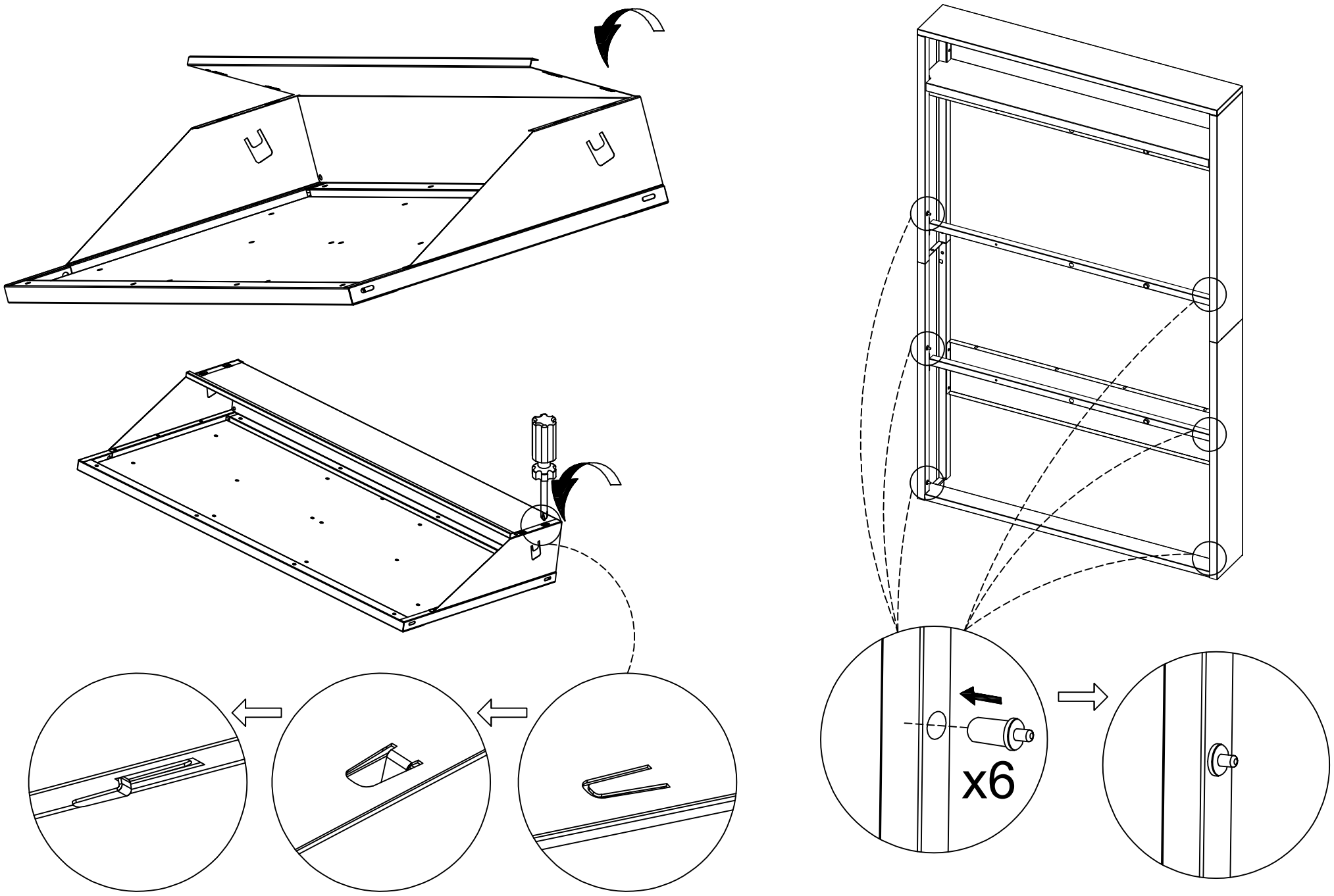

9. Open the baffles on 16. Install C

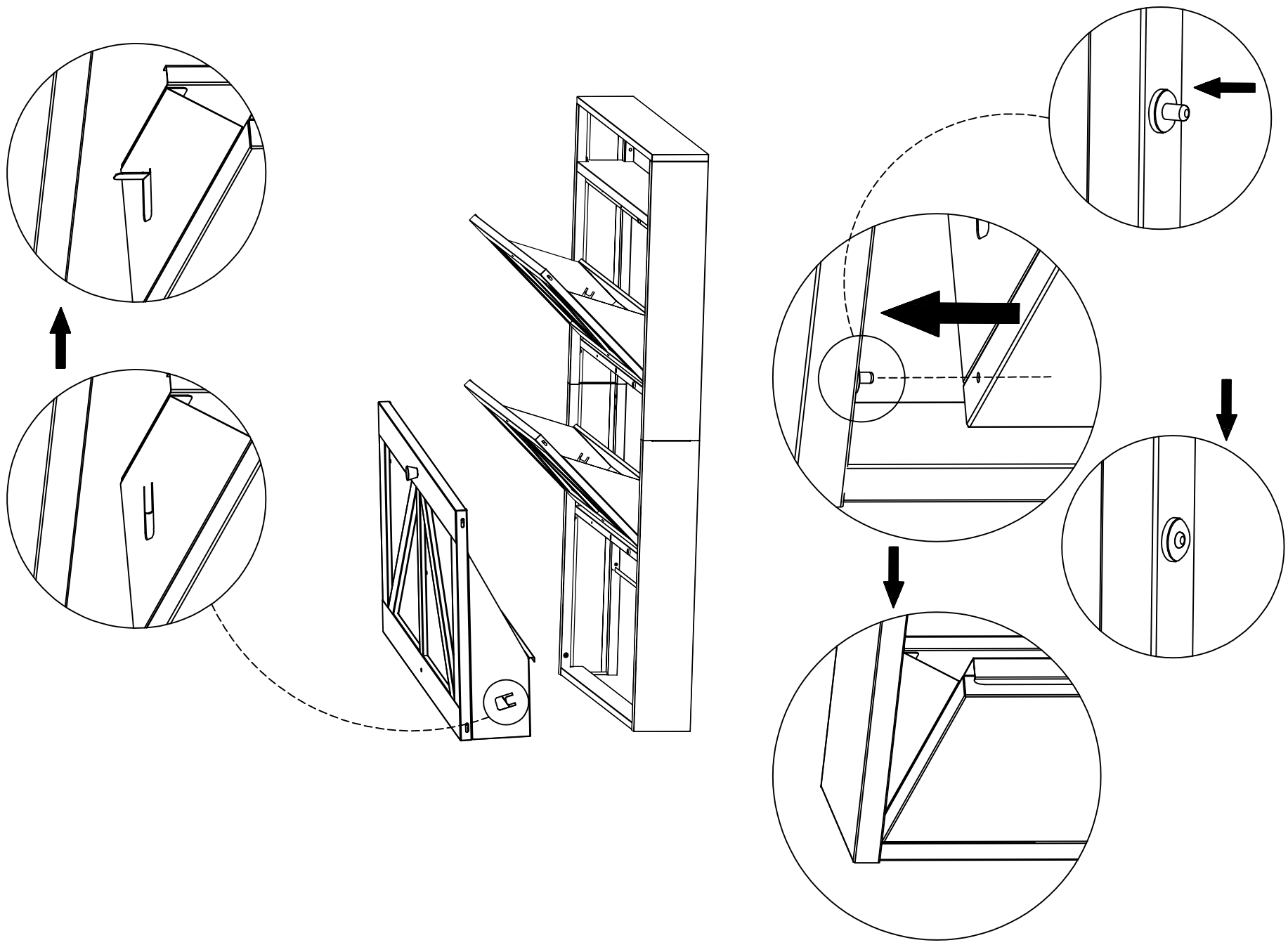

10. Install drawer. Open the baffles on drawer(14 and 15)

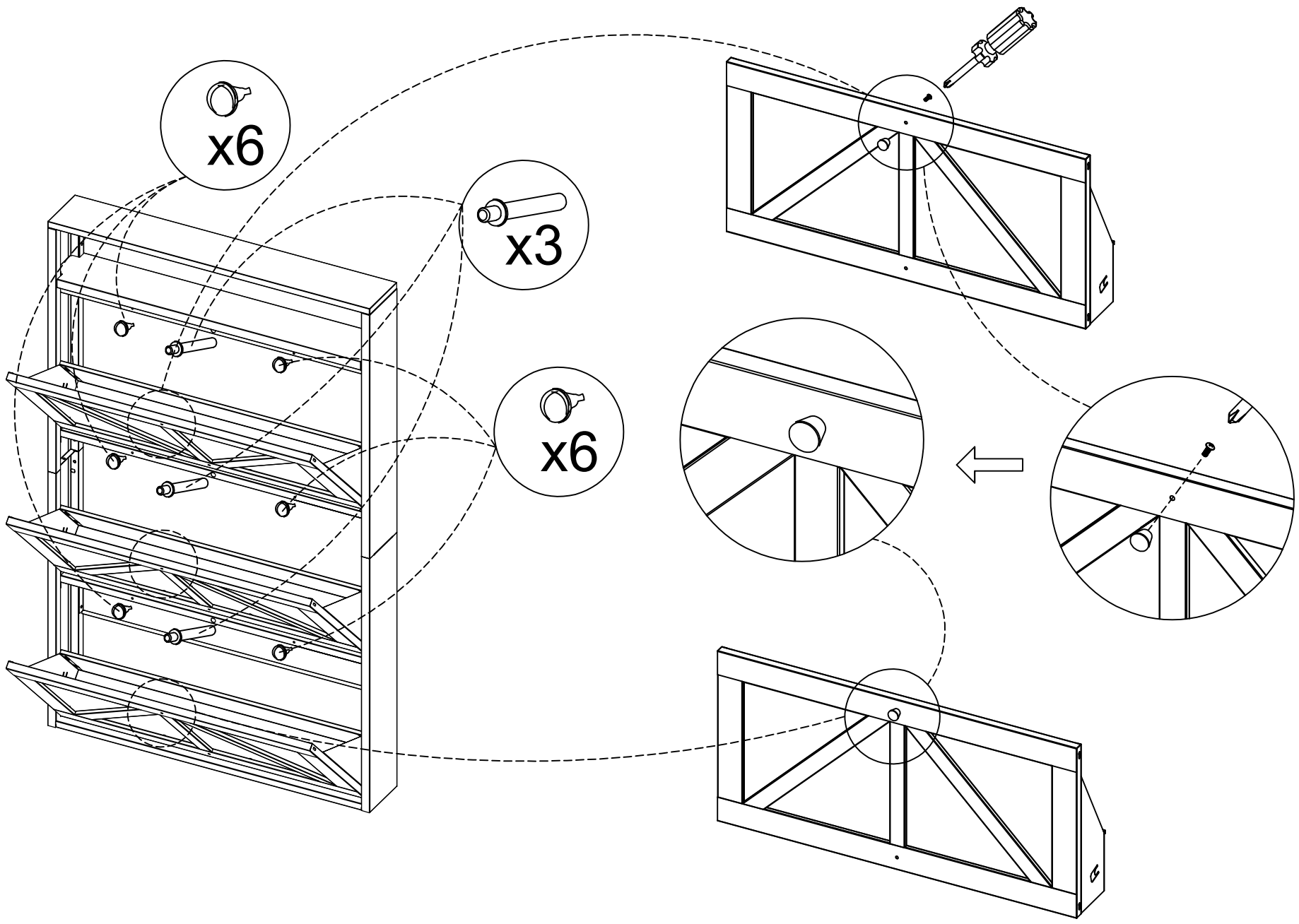

11. Install D, F and H

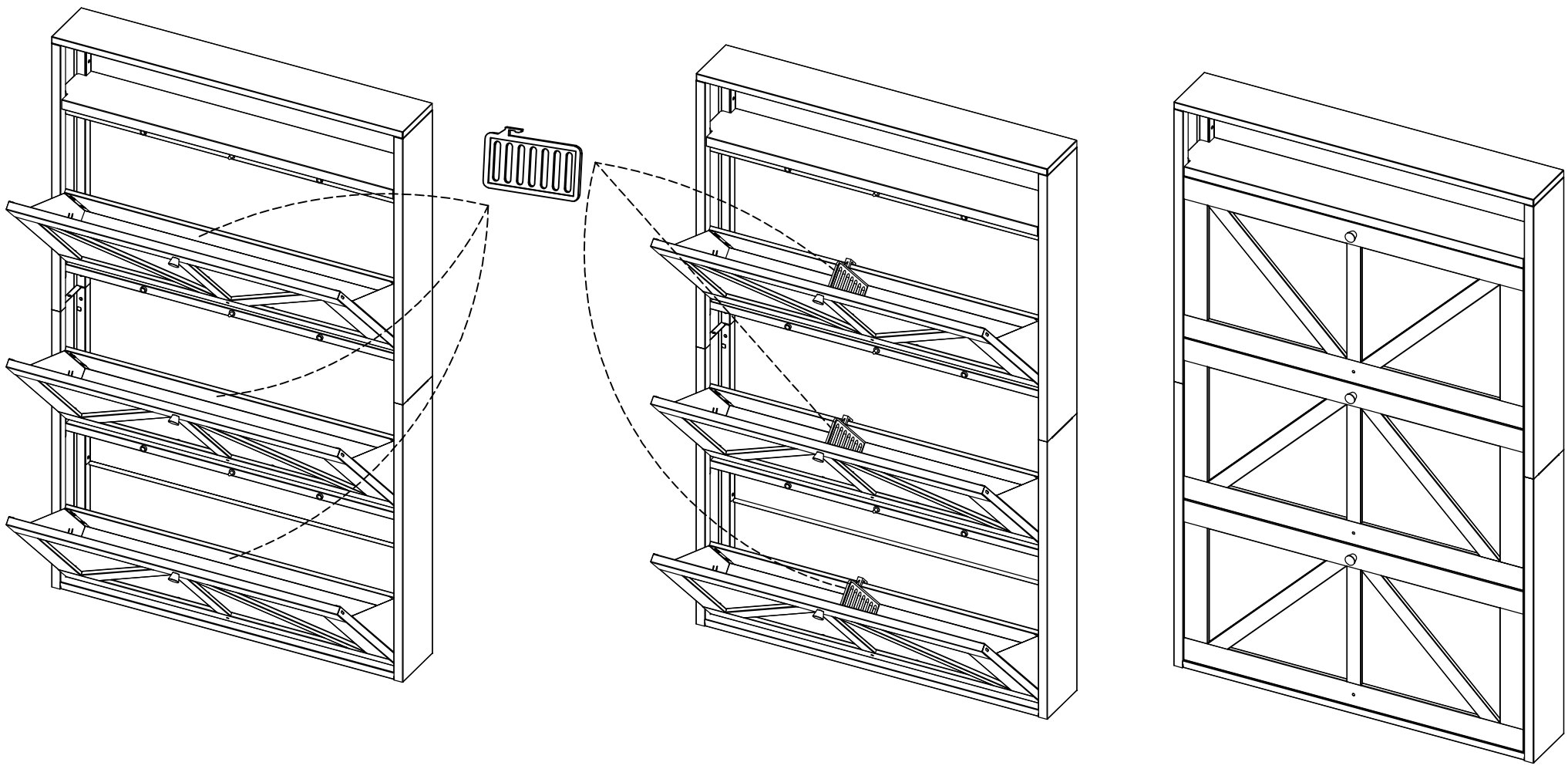

12. Install G