ASSEMBLY INSTRUCTIONS

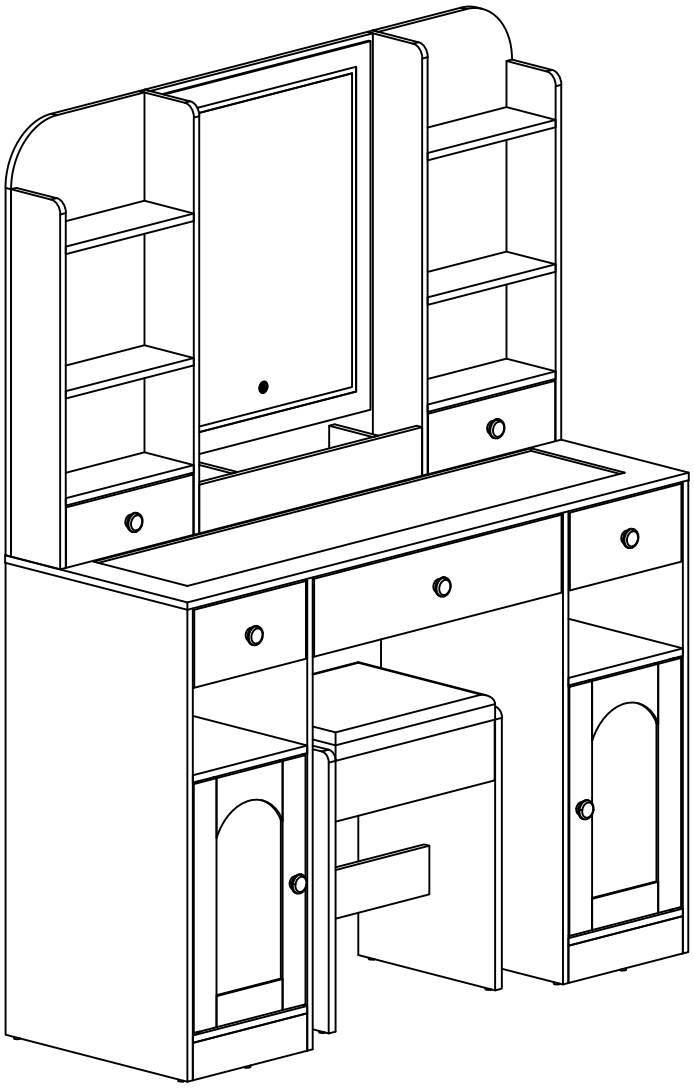

2PERS

120 MIN

Tool Required Not Provided

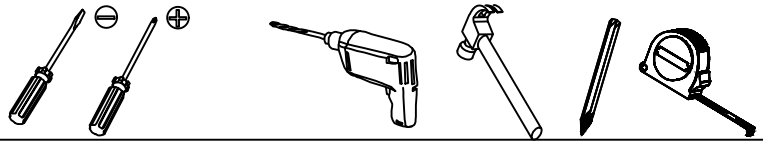

WARNING

1.The maximum weight capacity of the product is100kg; do not overload.
2.Do not allow children to climb on furniture, as it may cause tipping and serious injury.
3.For safety, please install correctly according to the instructions, and seek professional assistance if necessary.
4.Do not place furniture near fire sources or hot items to avoid fire risk.
5.Do not place furniture in damp environments to prevent material damage.
6.Regularly check all connections and fasteners to ensure they are secure to prevent accidents.
7.Clean furniture with a damp cloth or alcohol; avoid using cleaners with corrosive chemicals.

Before installation, insert the screws into the holes and tighten them, but do not tighten them to 100%, 70% to 80% is sufficient. Finally, after all screws are installed, tighten all screws to 100%. If you encounter these issues, such as if the holes cannot be aligned or some parts cannot be installed, please check if the screws are used correctly and adjust the tightness of the screws.

Parts list

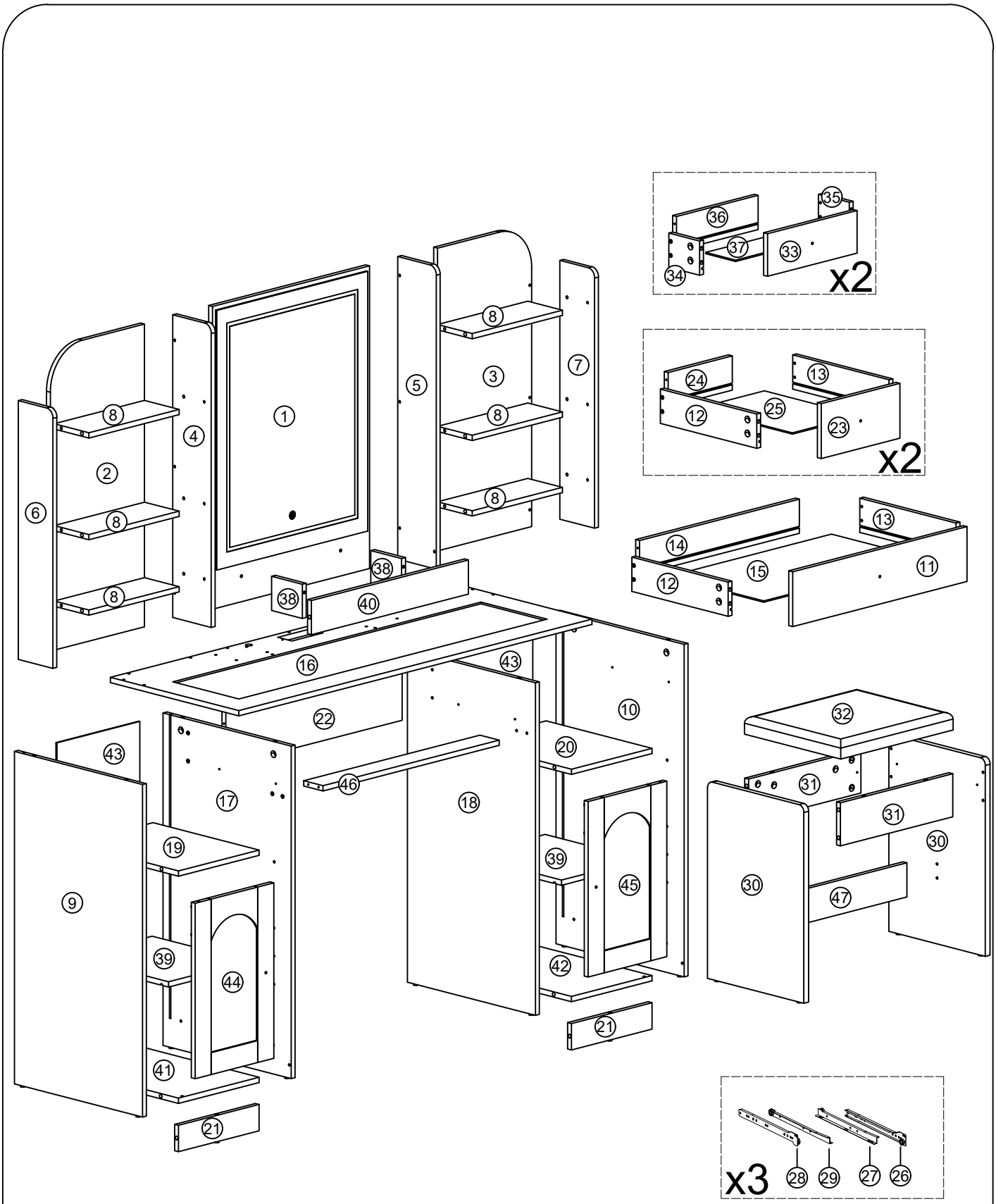

①x1 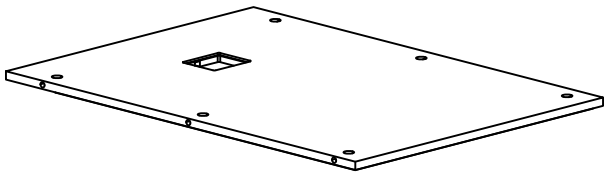	②x1 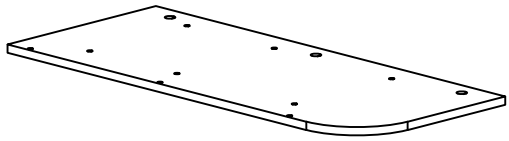
③x1 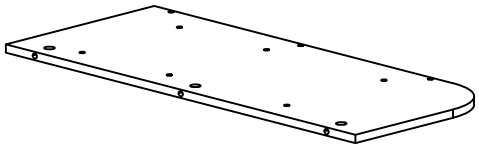	④x1 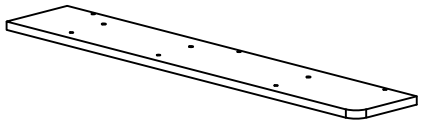
⑤x1 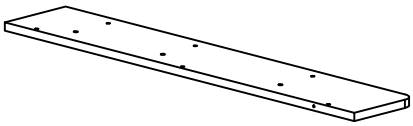	⑥x1 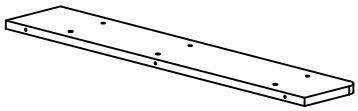
⑦x1 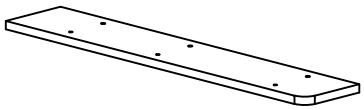	⑧x6 
⑨x1 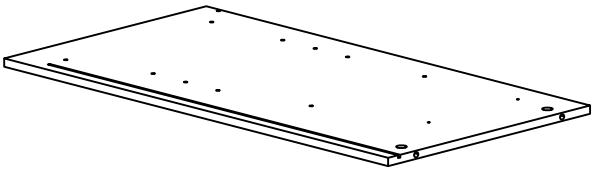	⑩ x1 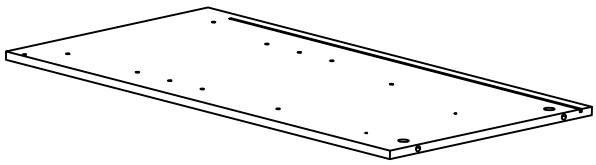
⑪ x1 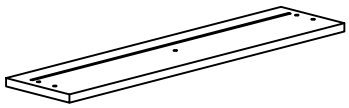	⑫ x3 
⑬ x3 	⑭ x1 

⑮ x1 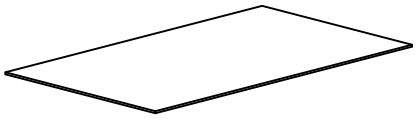	⑯ x1 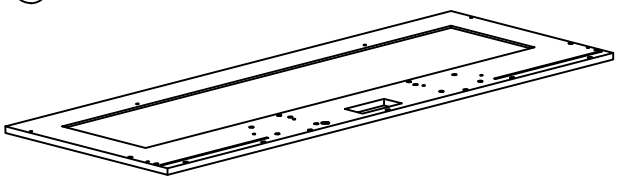
⑰ x1 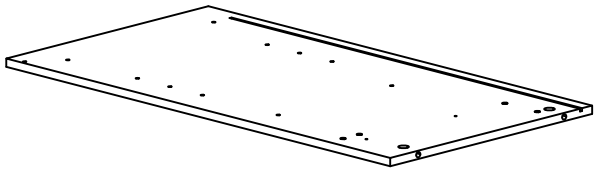	⑱ x1 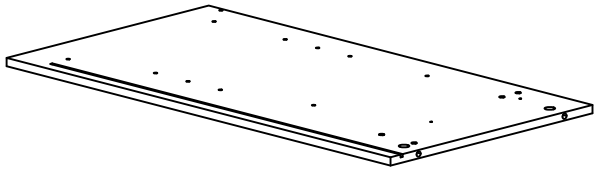
⑲ x1 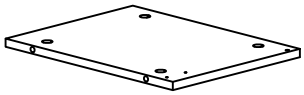	⑳ x1 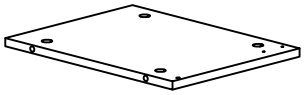
㉑ x2 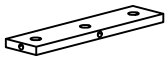	㉒ x1 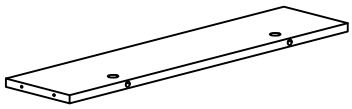
㉓ x2 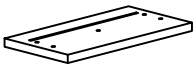	㉔ x2 
㉕ x2 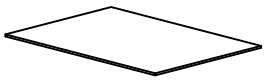	㉚ x2 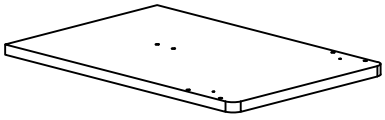
㉛ x2 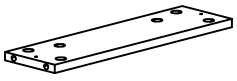	㉜ x1 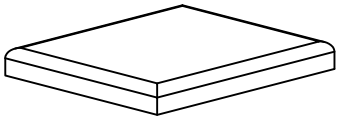

33 x2 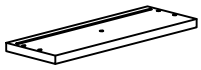	34 x2 	35 x2 
36 x2 	37 x2 	38 x2 
39 x2 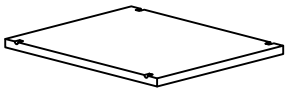	40 x1 	
41 x1 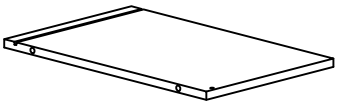	42 x1 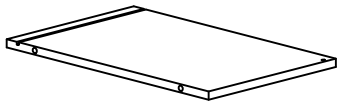	
43 x2 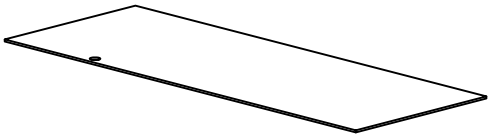	44 x1 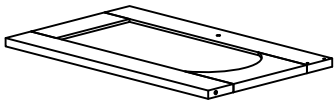	
45 x1 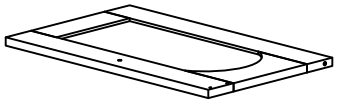	46 x1 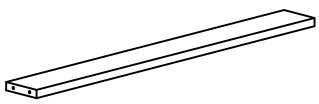	
47 x1 	48 x1 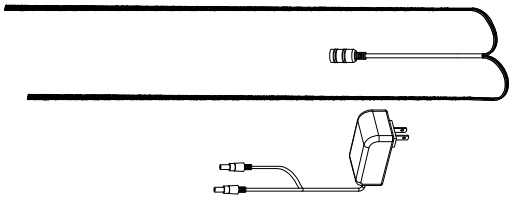	

Hardware

A	x94	B	x94	C	x16	D	x4	E	x12	F	x2
				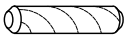						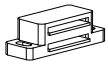	
Ø6x36mm		Ø15x9.5mm		Ø6x30mm				5mm			

G	x2	H	x7	J	x50	K	x67	N	x7	P	x12
											
				Ø3.5x12mm		Ø4x35mm		M4x15mm			

Q	x4	R	x1	S	x2	T	x2	U	x2	V	x2
		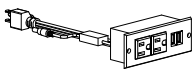									
Ø3x15mm				Φ4x14mm		Φ4x45mm					

J	x50	Q	x4
			
Ø3.5x12mm		Ø3x15mm	

Please note that the shapes of screws J and Q are similar. Please install according to the instructions and distinguish them!

1

x2

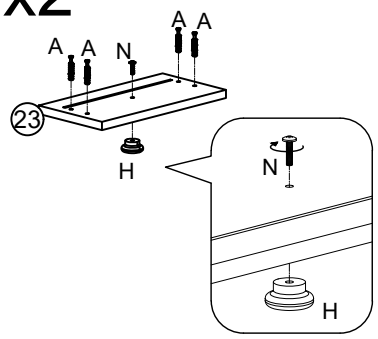

x2

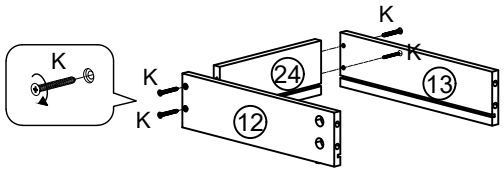

A	x8
Ø6x36mm	

K	x8
Ø4x35mm	

N	x2
M4x15mm	

H	x2

2

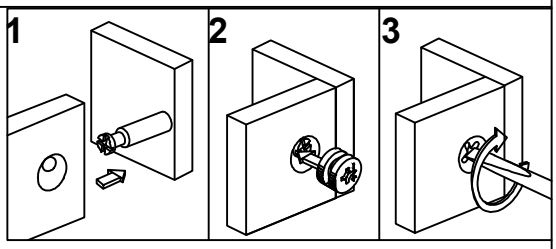

x2

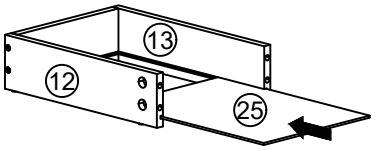

x2

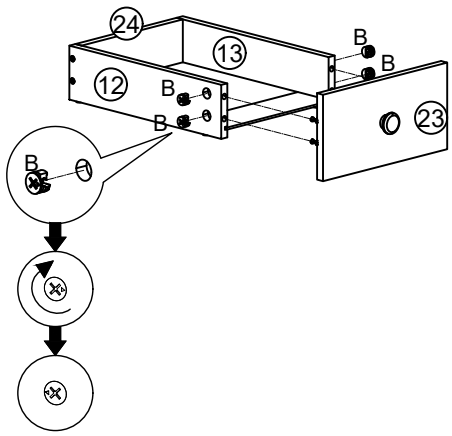

B	x8
Ø15x9.5mm	

3

x2

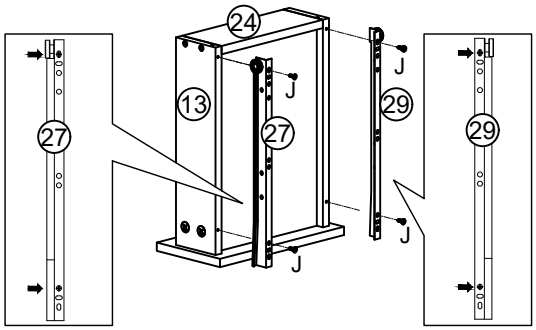

J	8
Ø3.5x12mm	

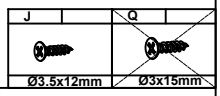

4

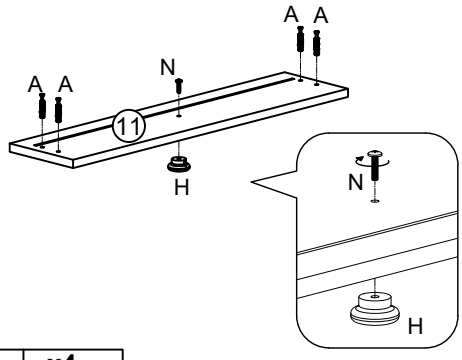

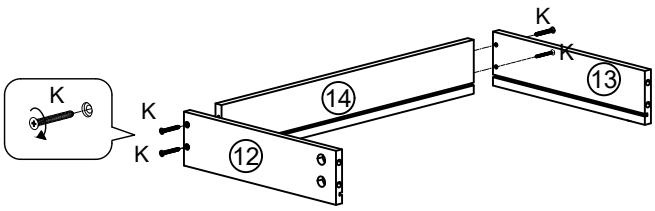

A	x4
Ø6x36mm	

K	x4
Ø4x35mm	

N	x1
M4x15mm	

H	x1

5

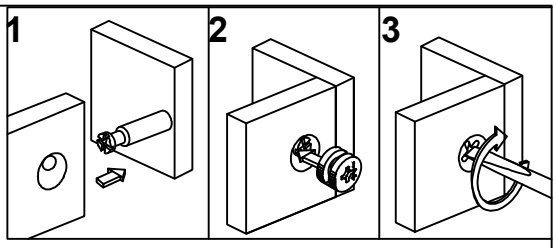

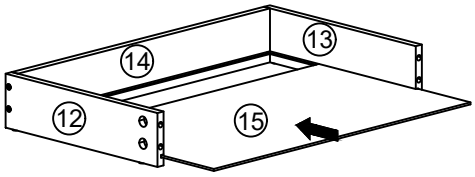

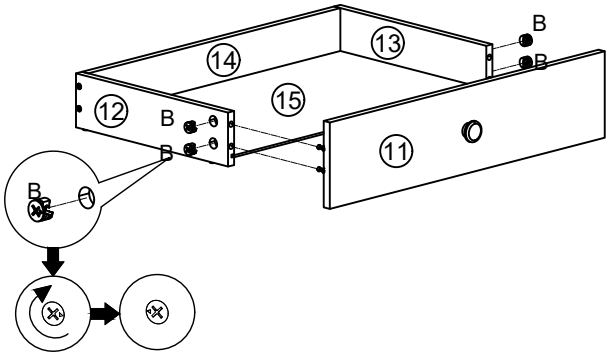

B	x4
	
Ø15x9.5mm	

6

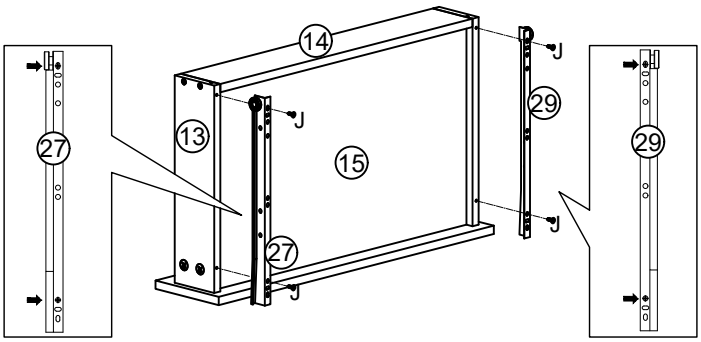

J	4
	
Ø3.5x12mm	

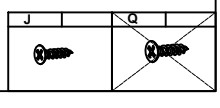

7

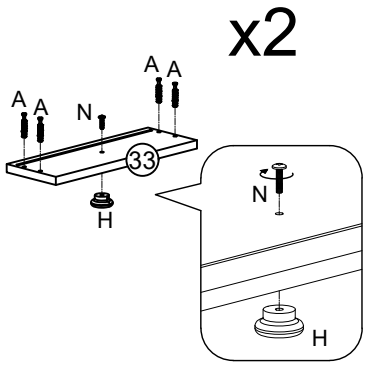

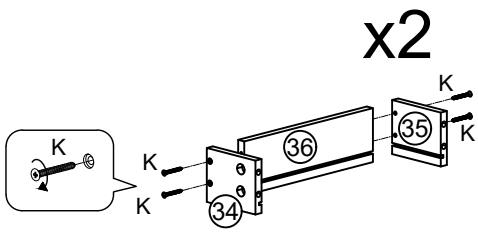

A	x8
Ø6x36mm	

K	x8
Ø4x35mm	

N	x2
M4x15mm	

H	x2

8

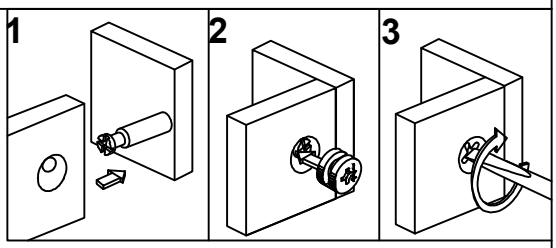

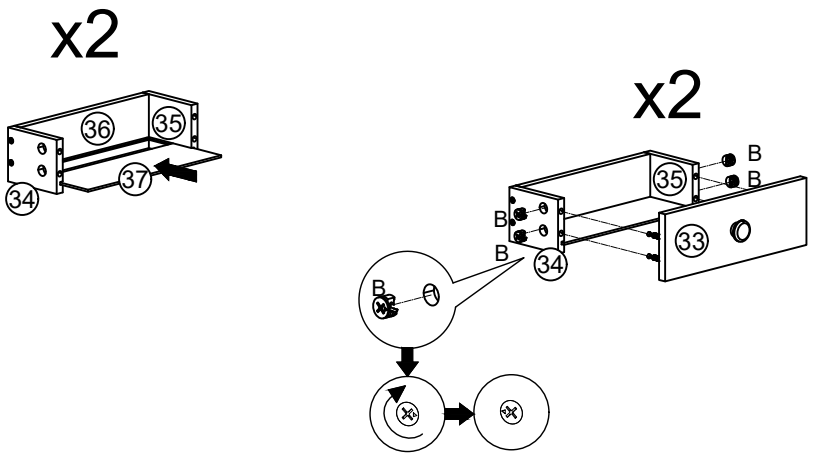

B	x8
Ø15x9.5mm	

9

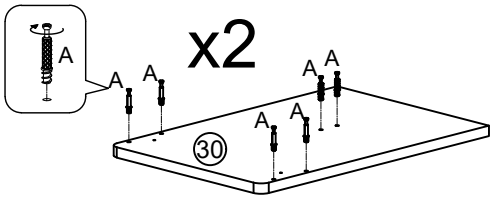

A	x12
Ø6x36mm	

10

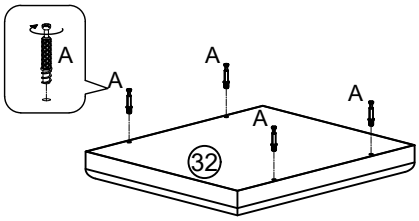

A	x4
Ø6x36mm	

11

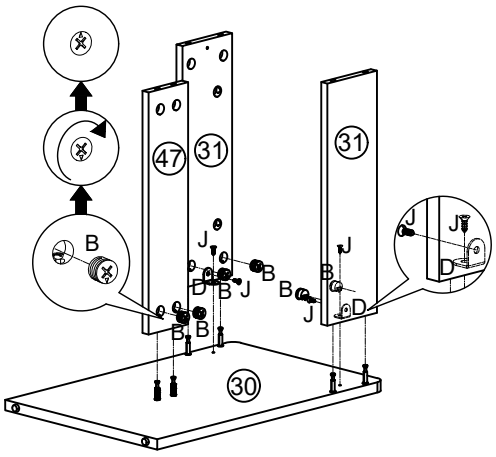

J	x4
Ø3.5x12mm	

D	x2

B	x6
Ø15x9.5mm	

J	Q
Ø3.5x12mm	Ø3x15mm

12

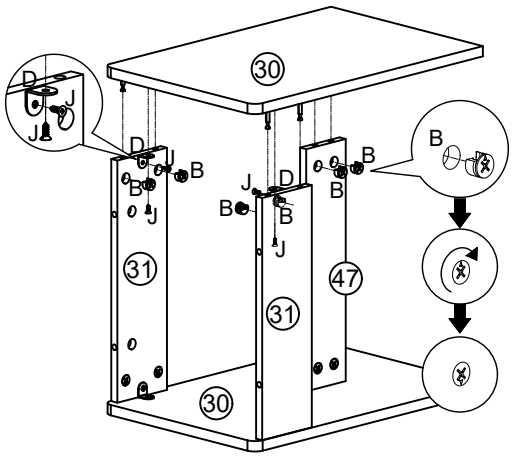

J	x4
Ø3.5x12mm	

B	x6
Ø15x9.5mm	

D	x2

J	Q

13

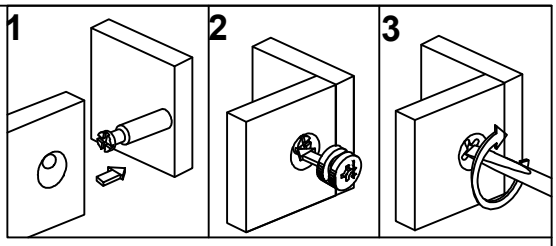

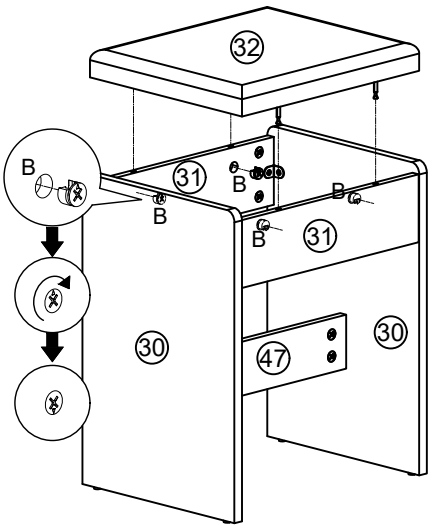

B	x4
	
Ø15x9.5mm	

14

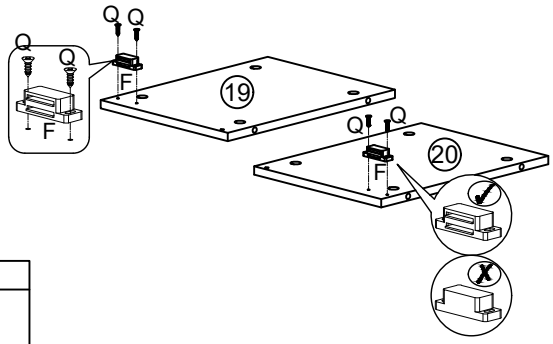

Q	x4
	
Ø3x15mm	

F	x2
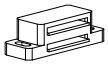	

J	Q
	
Ø3.5x12mm	Ø3x15mm

15

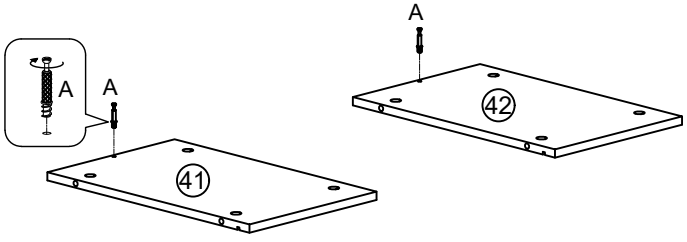

A	x2
	
Ø6x36mm	

16

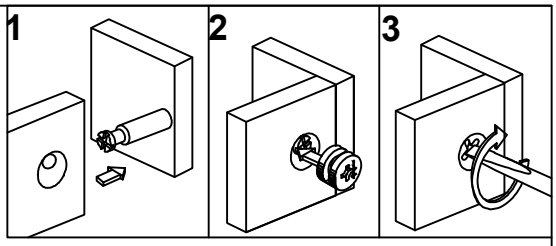

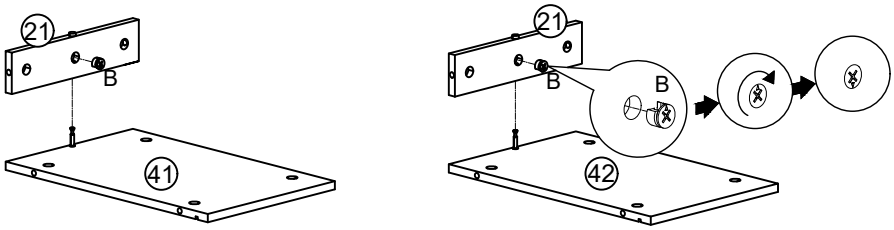

B	x2
Ø15x9.5mm	

17

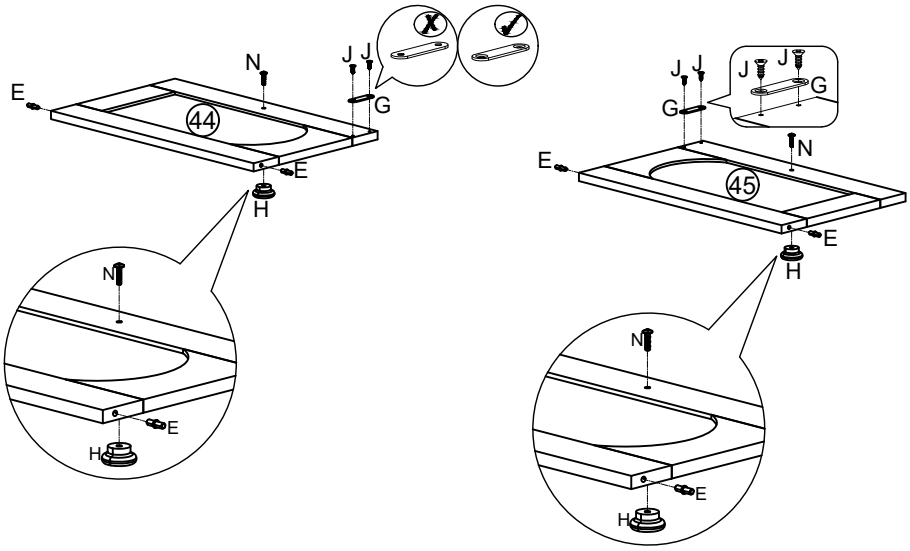

G	x2

N	x2
M4x15mm	

H	x2

J	x4
Ø3.5x12mm	

E	x4
5mm	

Ø3.5x12mm Ø3x15mm

18

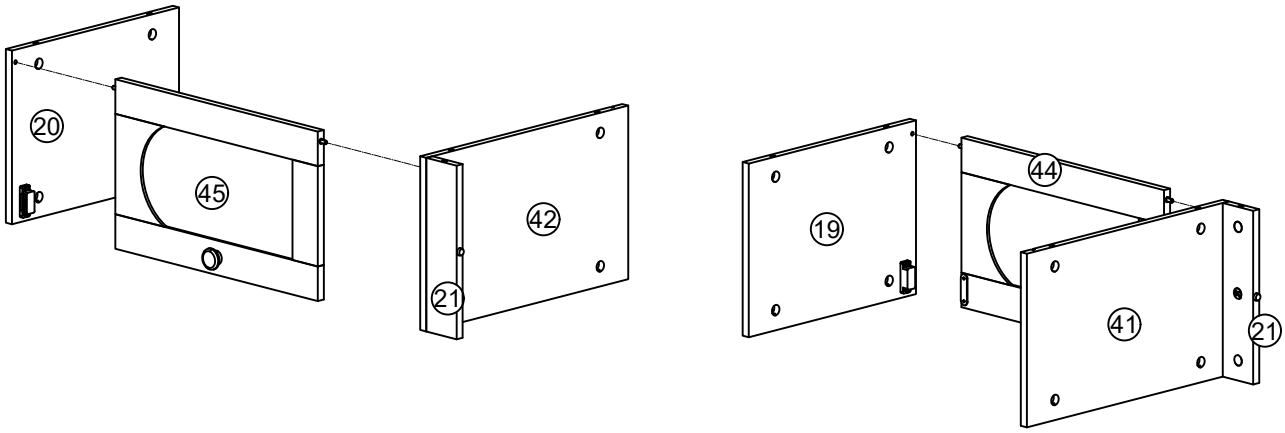

19

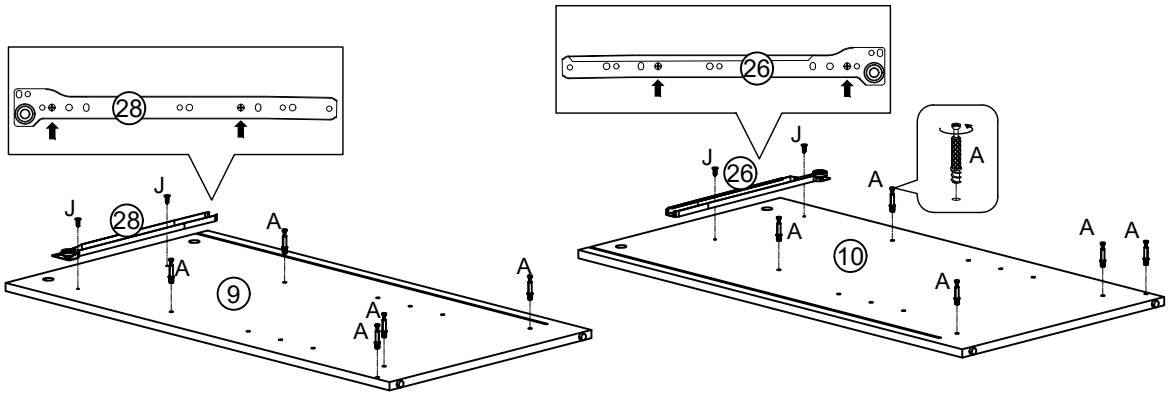

A	x10
Ø6x36mm	

J	x4
Ø3.5x12mm	

20

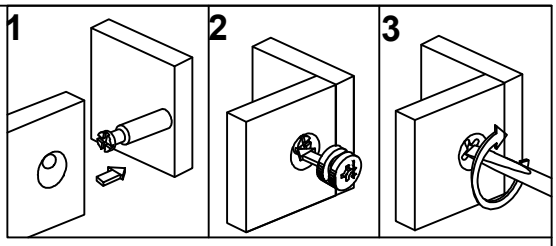

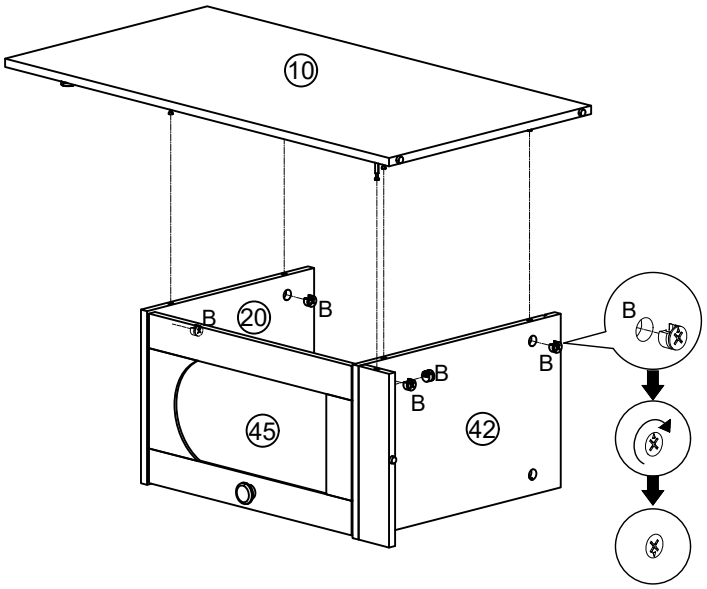

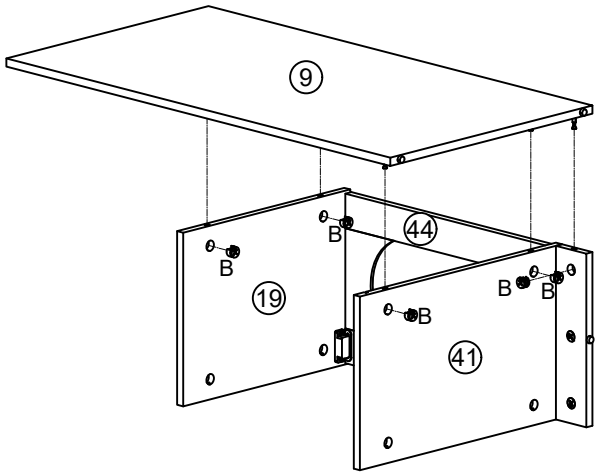

B	x10
	
Ø15x9.5mm	

21

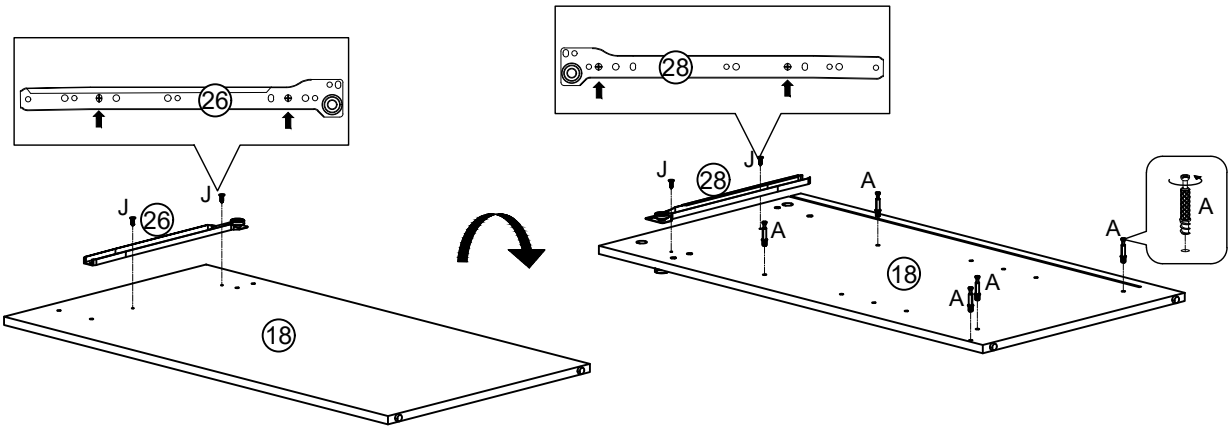

A	x5
	
Ø6x36mm	

J	x4
	
Ø3.5x12mm	

J	Q
	
Ø3.5x12mm	Ø3x15mm

22

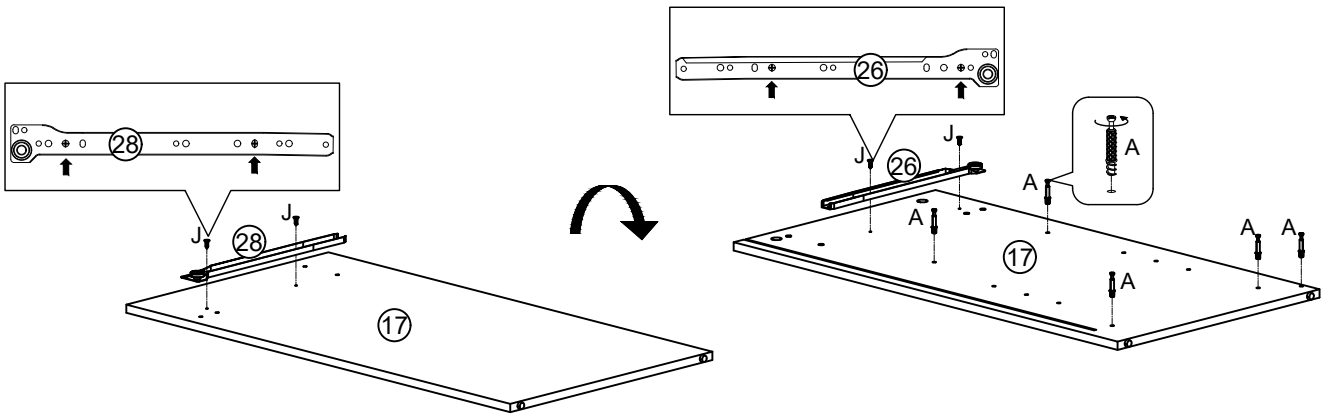

A	x5
Ø6x36mm	

J	x4
Ø3.5x12mm	

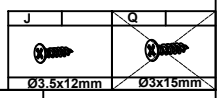

23

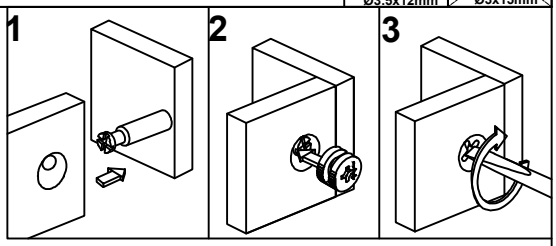

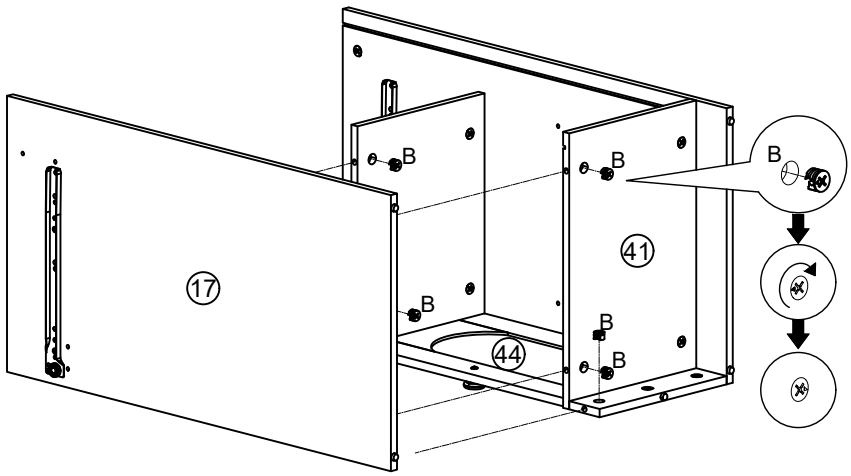

B	x5
Ø15x9.5mm	

24

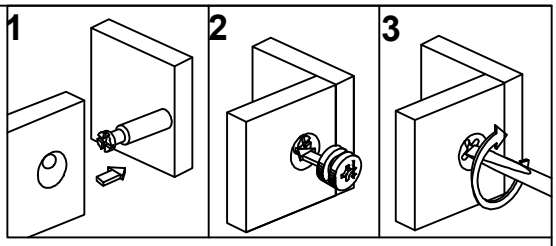

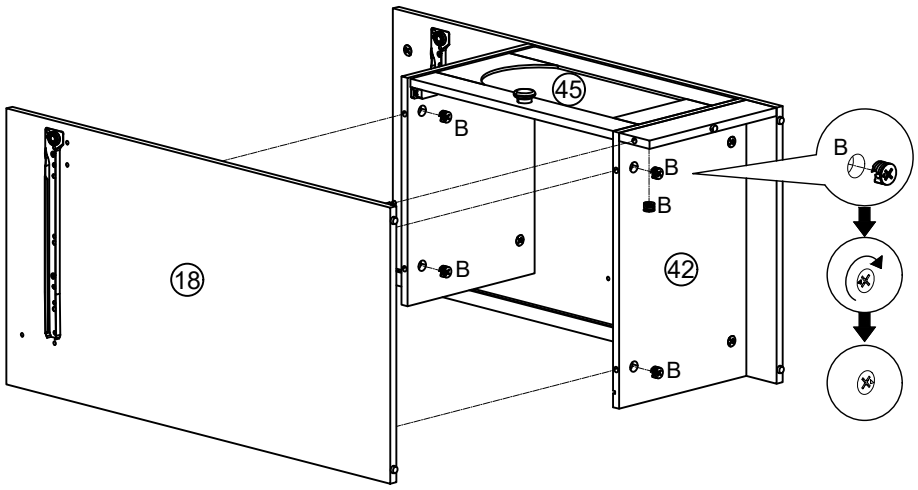

B	x5
Ø15x9.5mm	

25

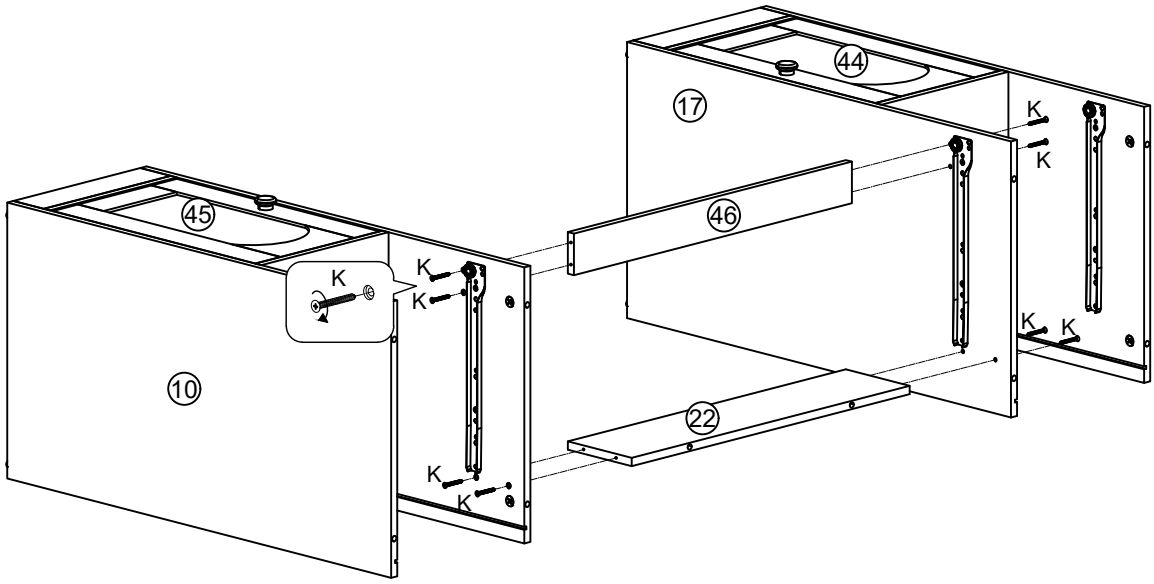

K	x8
Ø4x35mm	

26

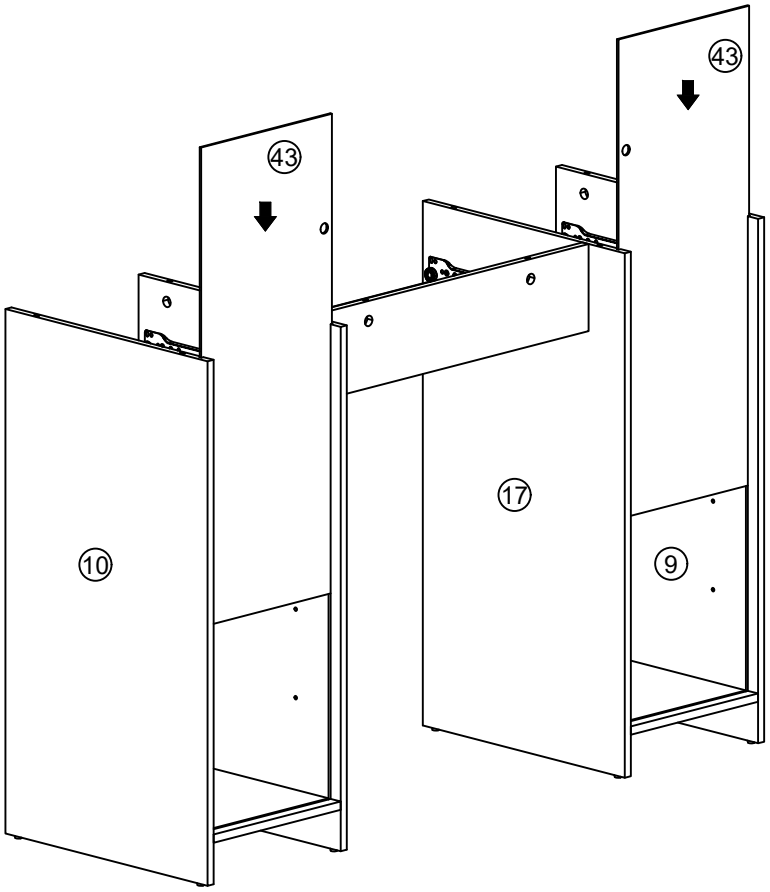

27

Step 1: Push the LED strip (48) through the backboard hole
Step 2: Peel off the double-sided adhesive on sides of the LED strip
Step 3: Fix the LED strip in the appropriate

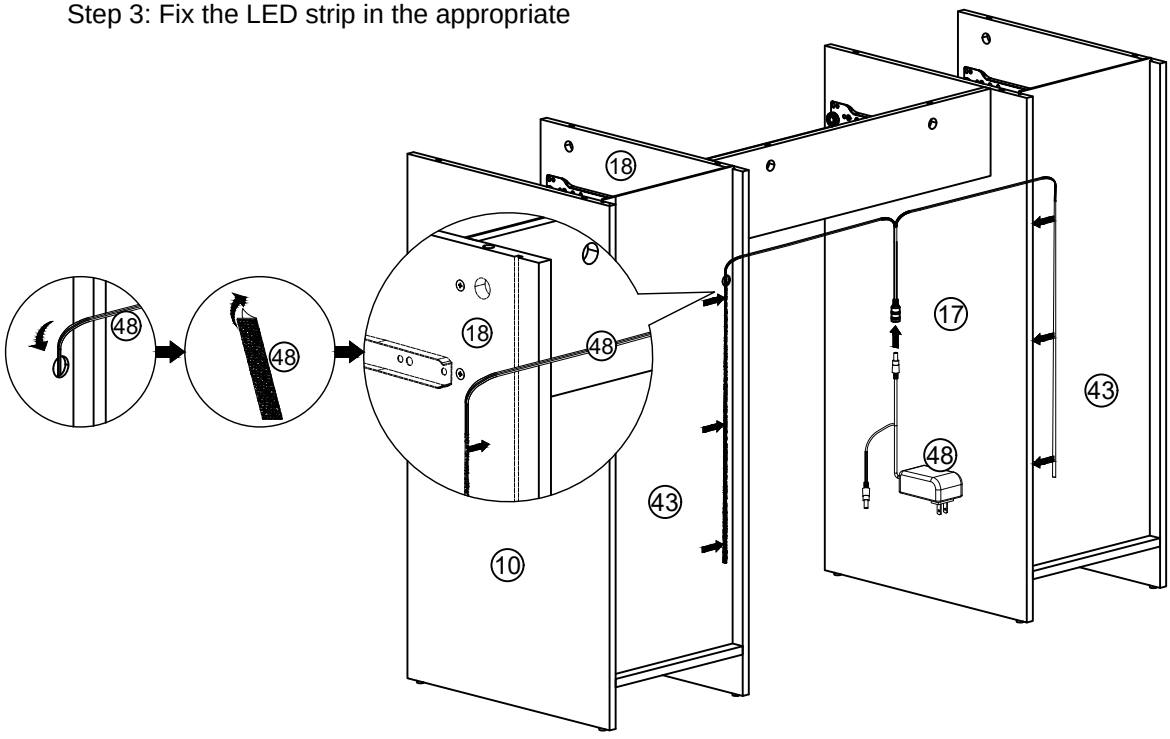

28

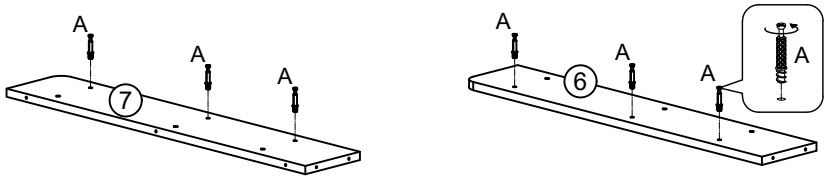

A	x6
Ø6x36mm	

29

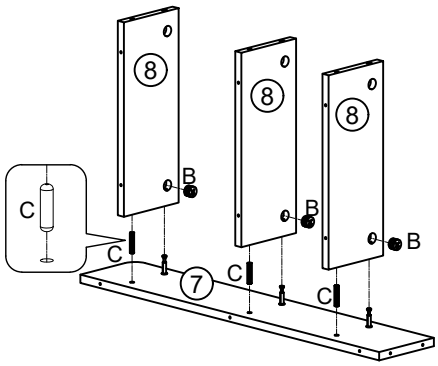

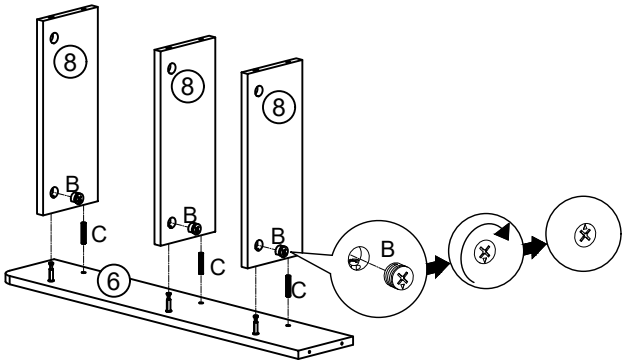

B	x6
Ø15x9.5mm	

C	x6
Ø6x30mm	

30

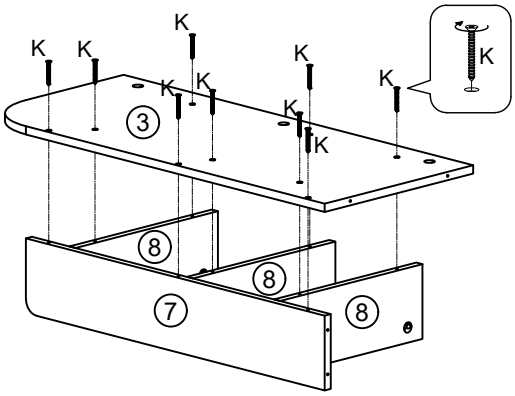

K	x9
Ø4x35mm	

31

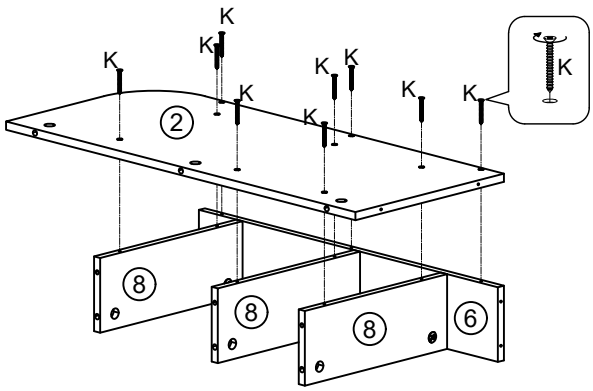

K	x9
Ø4x35mm	

Ø3.5x12mm Ø3x15mm

32

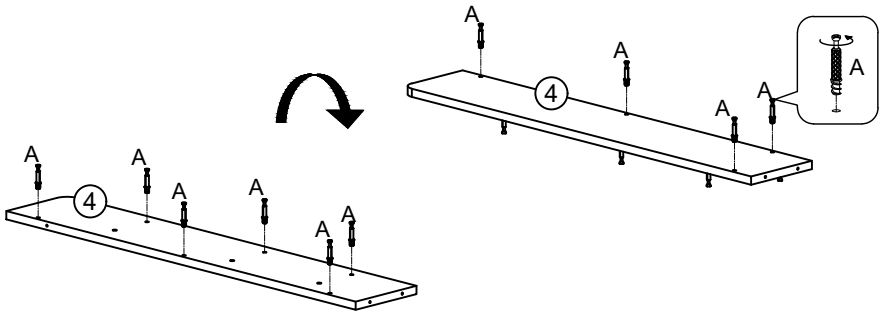

A	x10
	
Ø6x36mm	

33

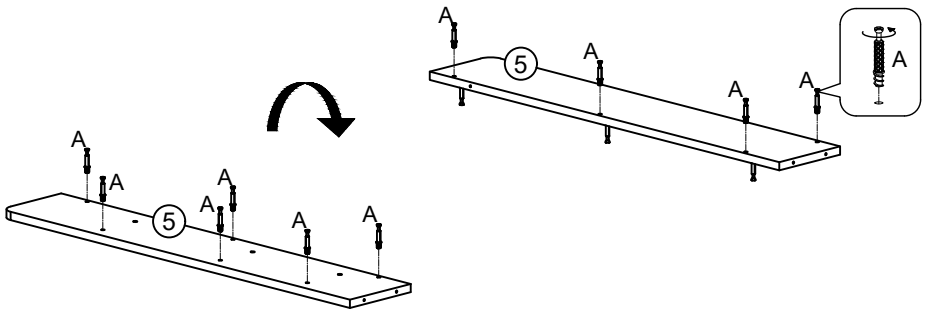

A	x10
	
Ø6x36mm	

34

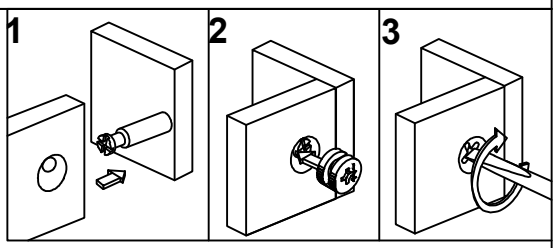

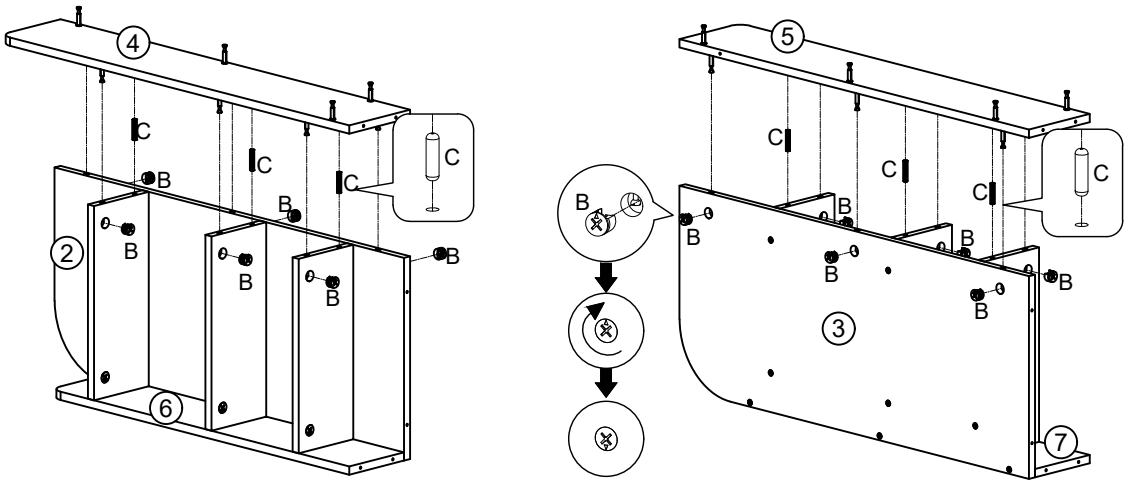

B	x12
	
Ø15x9.5mm	

C	x6
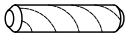	
Ø6x30mm	

35

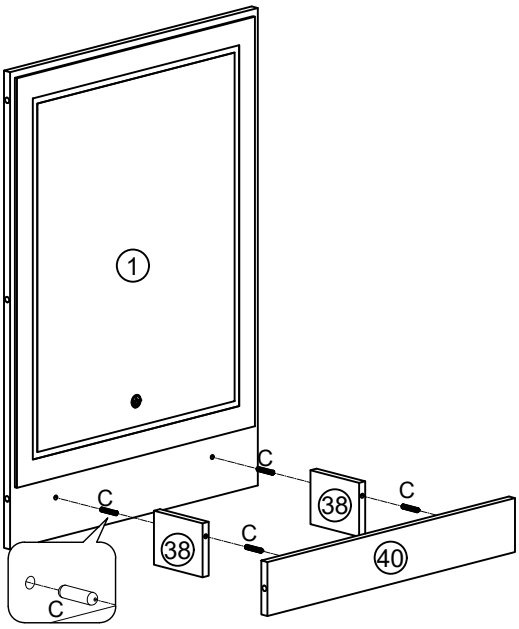

C	x4
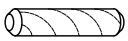	
Ø6x30mm	

36

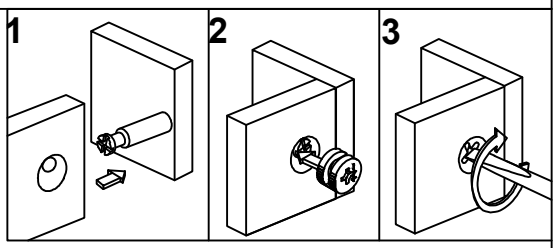

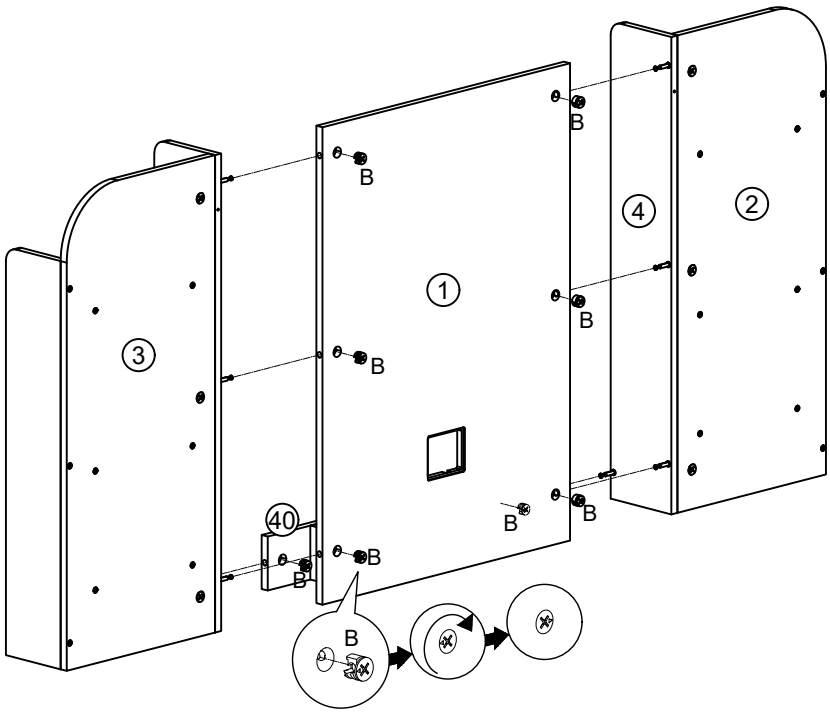

B	x8
	
Ø15x9.5mm	

37

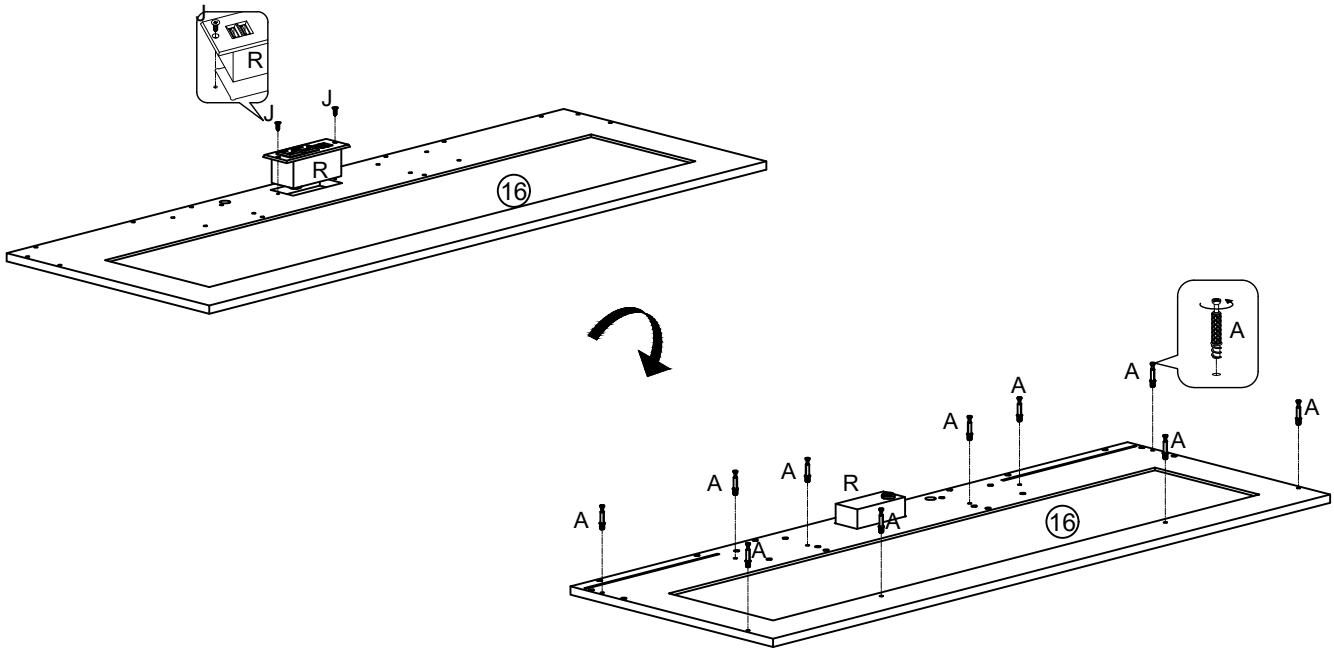

A	x10
Ø6x36mm	

J	x2
Ø3.5x12mm	

R	x1

38

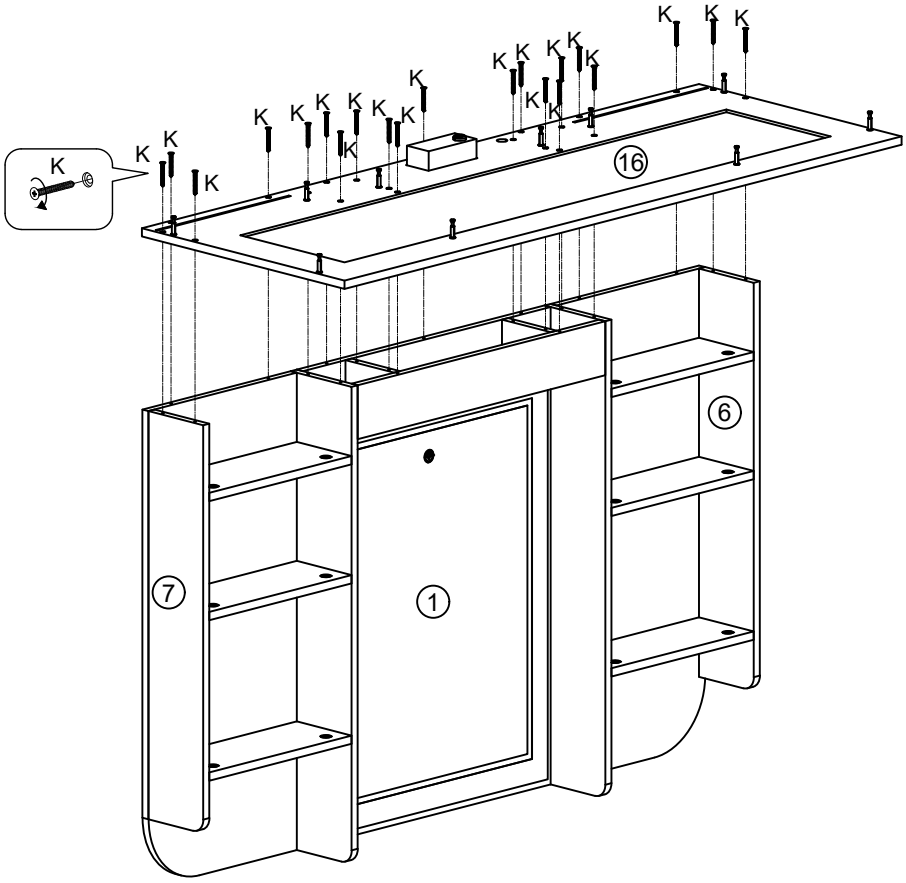

K	x21
Ø4x35mm	

39

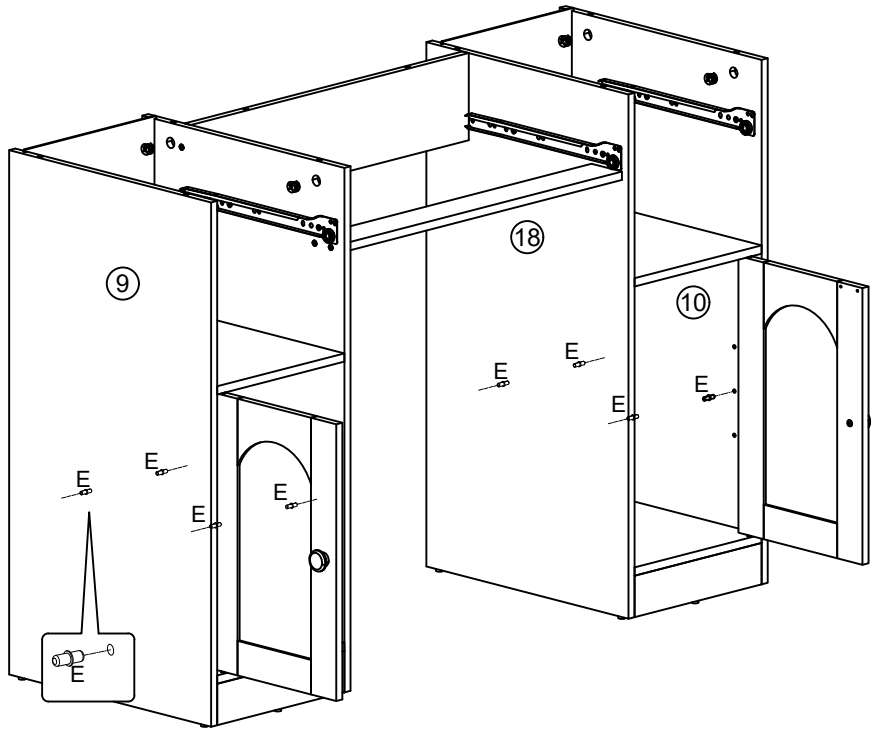

E	x8
	
5mm	

40

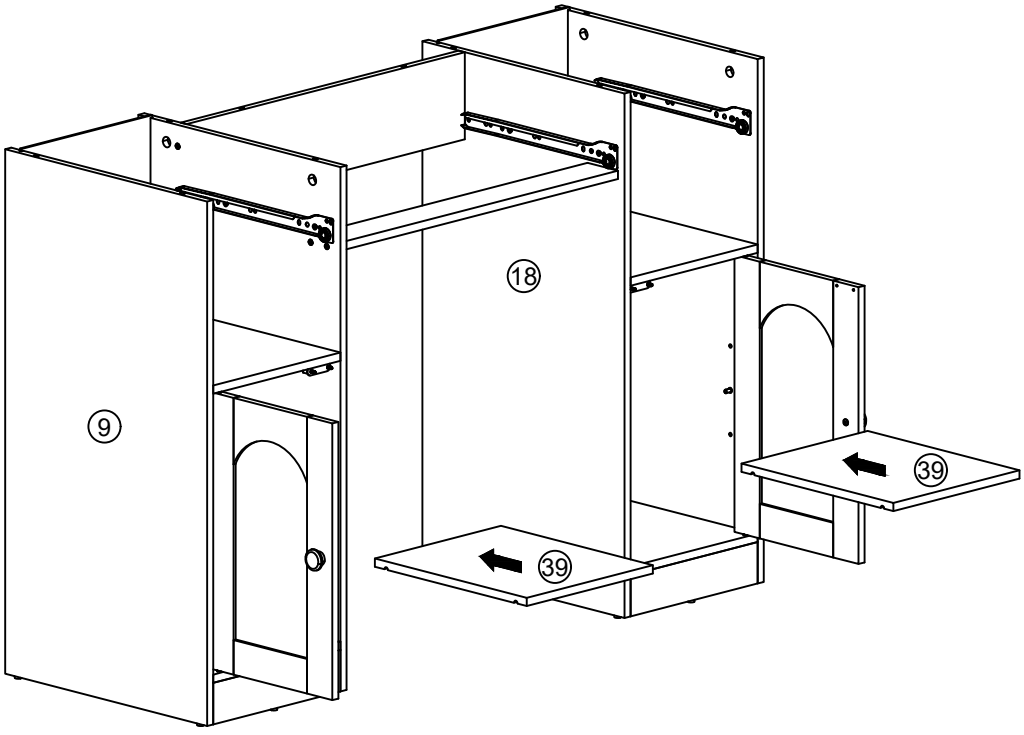

41

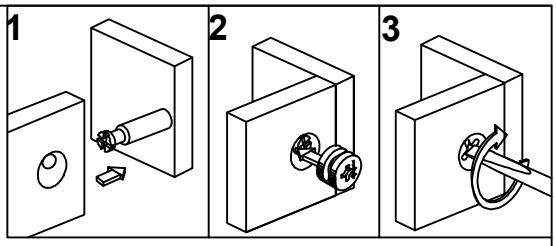

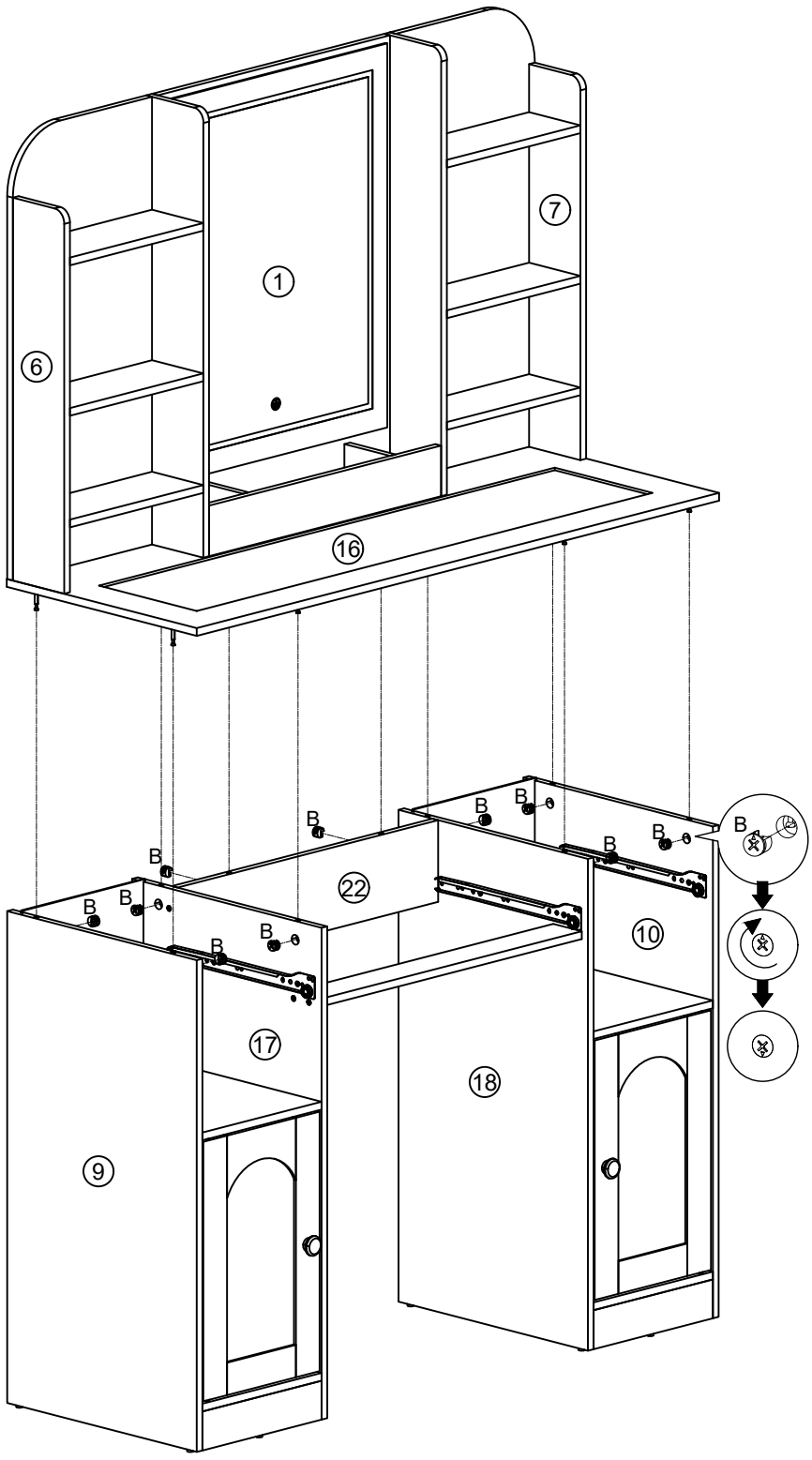

B	x10
	
Ø15x9.5mm	

42

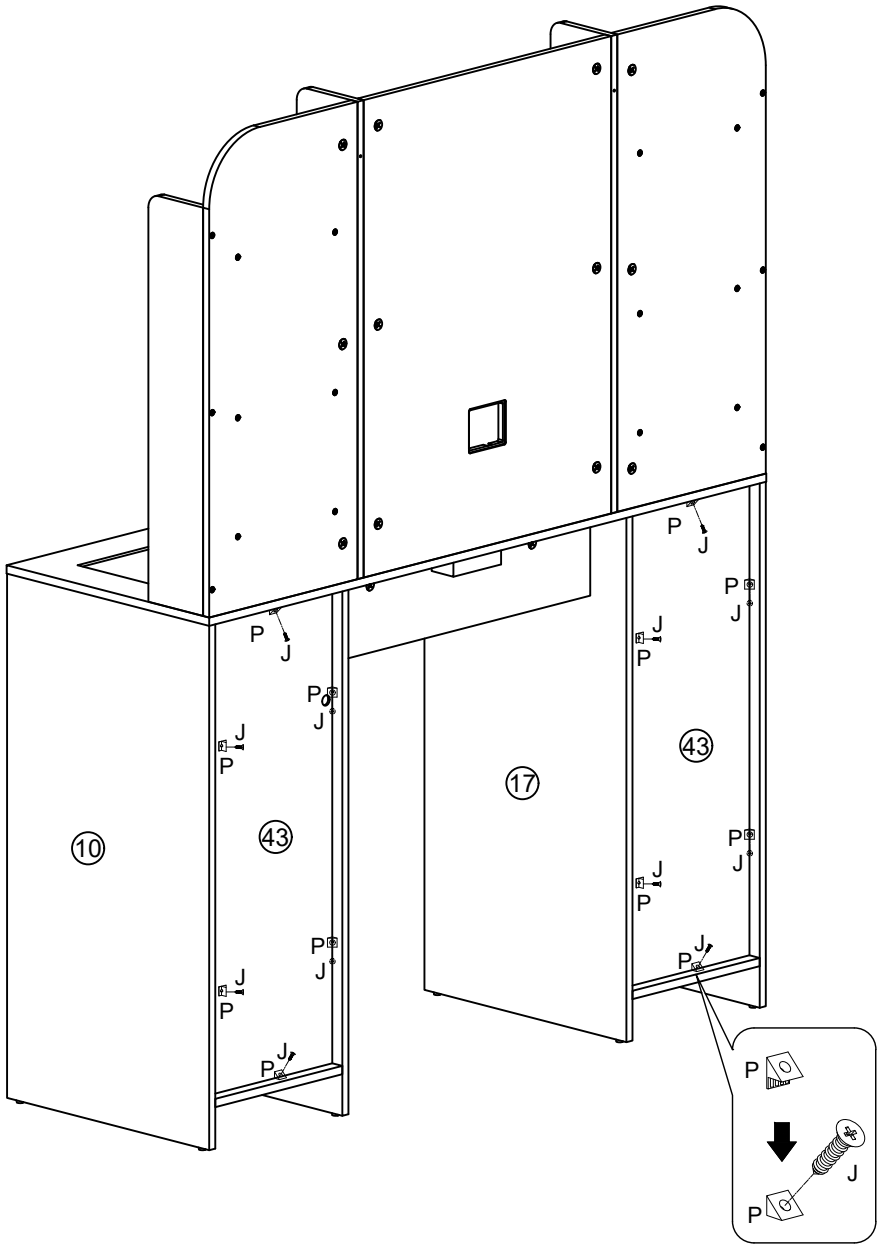

J	x12
Ø3.5x12mm	

P	x12

43

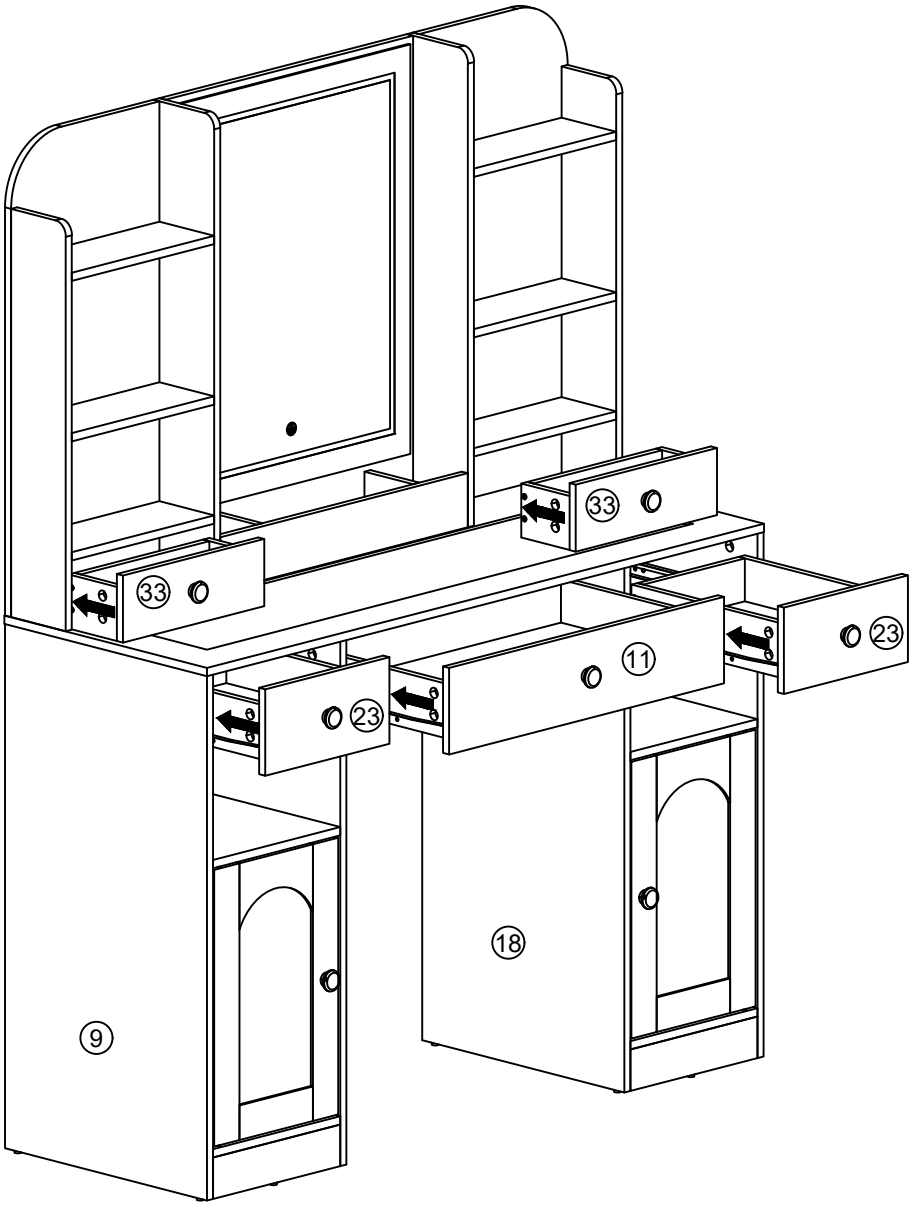

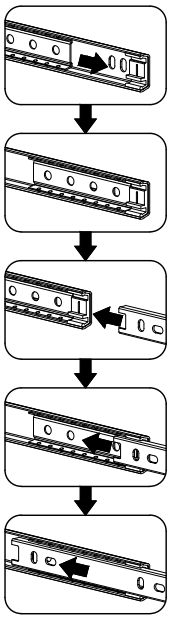

44

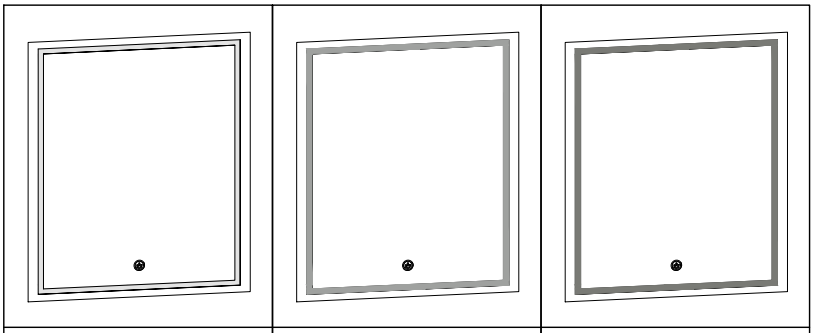

Cool Color	Natural Color	Warm Color

There are three adjustable positions, upper, middle and lower, and you can choose the position according to your needs.

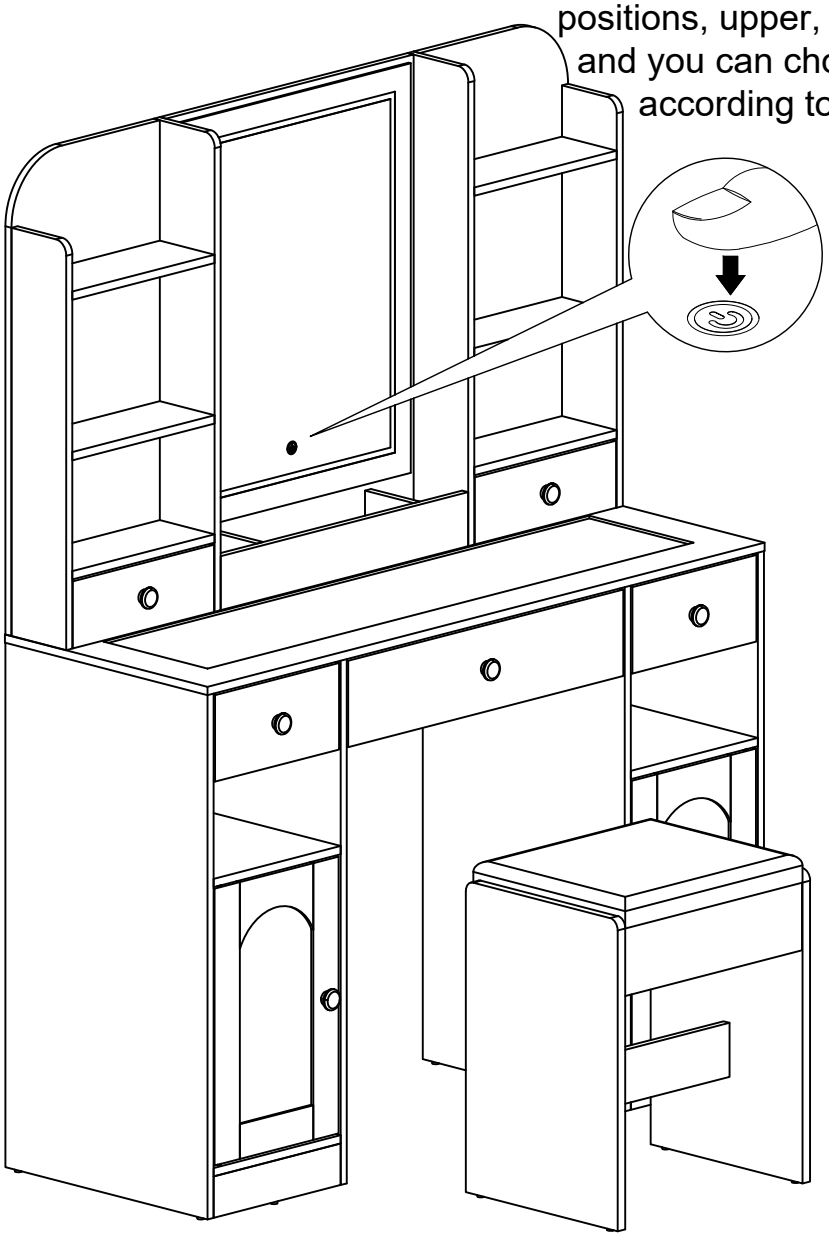

45

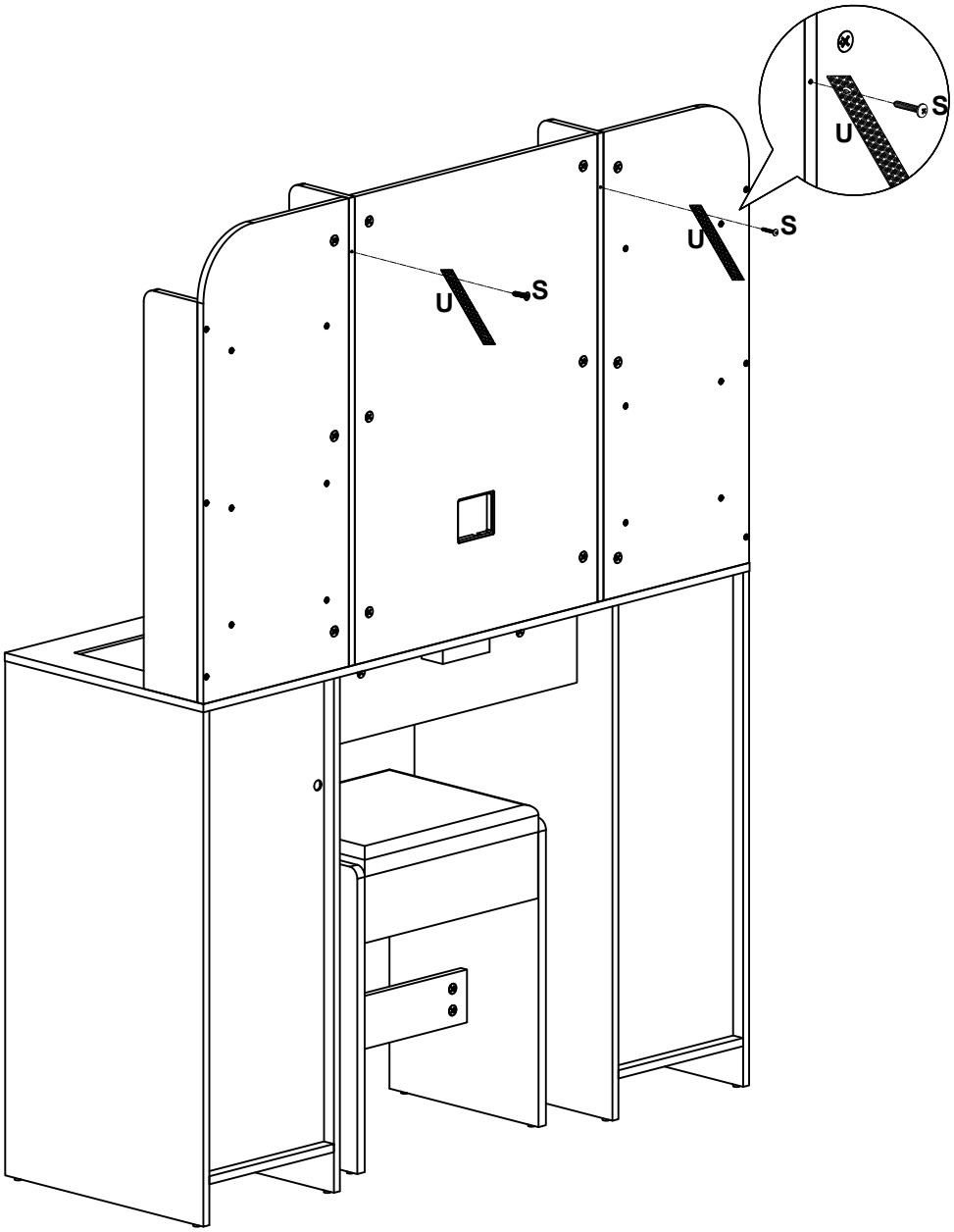

S	x2
Φ4x14mm	

U	x2

46

The first step is to put the cabinet close to the wall to find the positions of two holes corresponding to the wall；
The second step is to punch the corresponding holes on the wall with a drill；
The third step is to hammer the expanded plastic V into the wall；
The fourth step is to lock the anti-reverse tape U with a Φ4x45mm round-head tapping screw T.

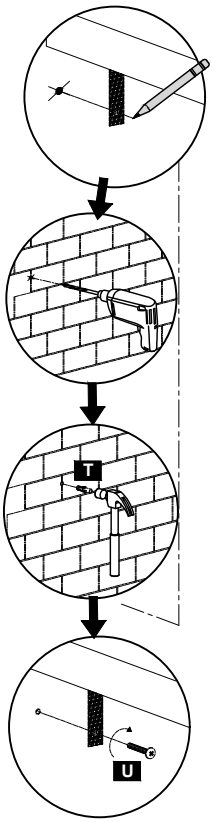

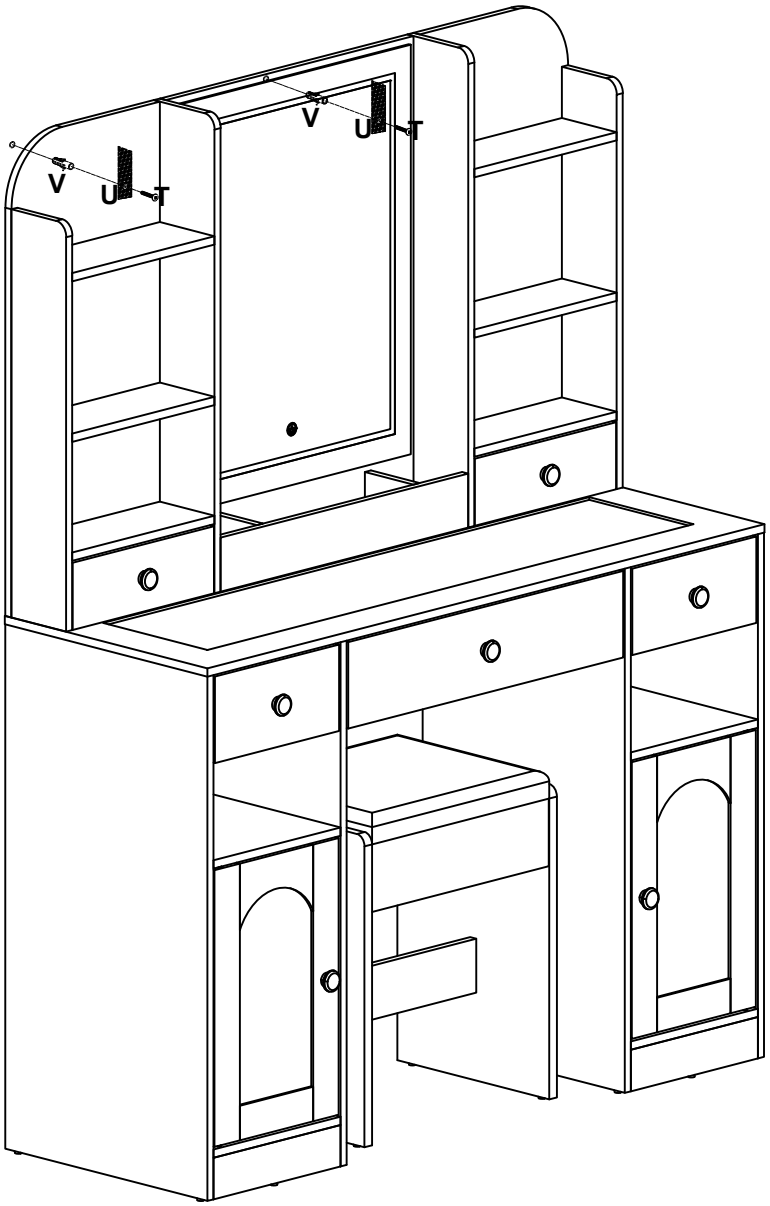

T	x2
	
Φ4x45mm	

V	x2
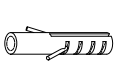	

U	x2
	