ASSEMBLY INSTRUCTIONS

60" DINING TABLE

A Table Top

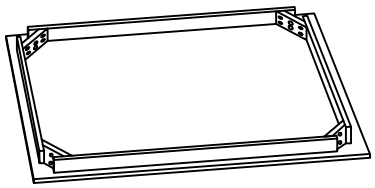

1 pc

B Table Leg

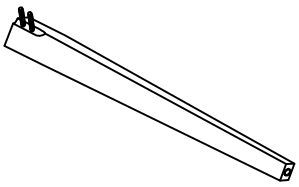

4 pcs

C Flat Washer
Ø5/16" x 3/4"

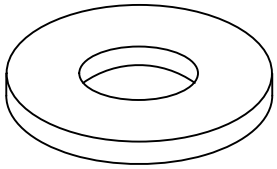

8 pcs

D Lock Washer
Ø5/16" x 9/16"

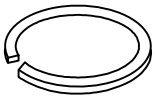

8 pcs

E Hex Nut
Ø5/16" x 1/2"

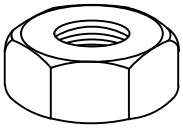

8 pcs

F Wrench
1/2"

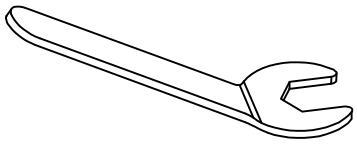

1 pc

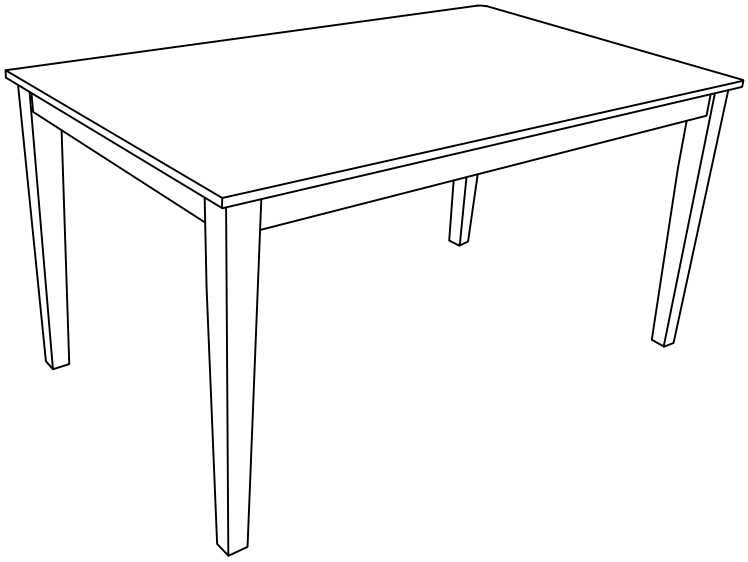

This page lists all the contents included in the box. Please take the time to identify the hardware as well as the individual components to this product. As you unpack and prepare for assembly, place the contents on a carpeted or padded area to protect them from damage.

1 Remove the protective panels from the Table Top (A) using a screwdriver (not provided).

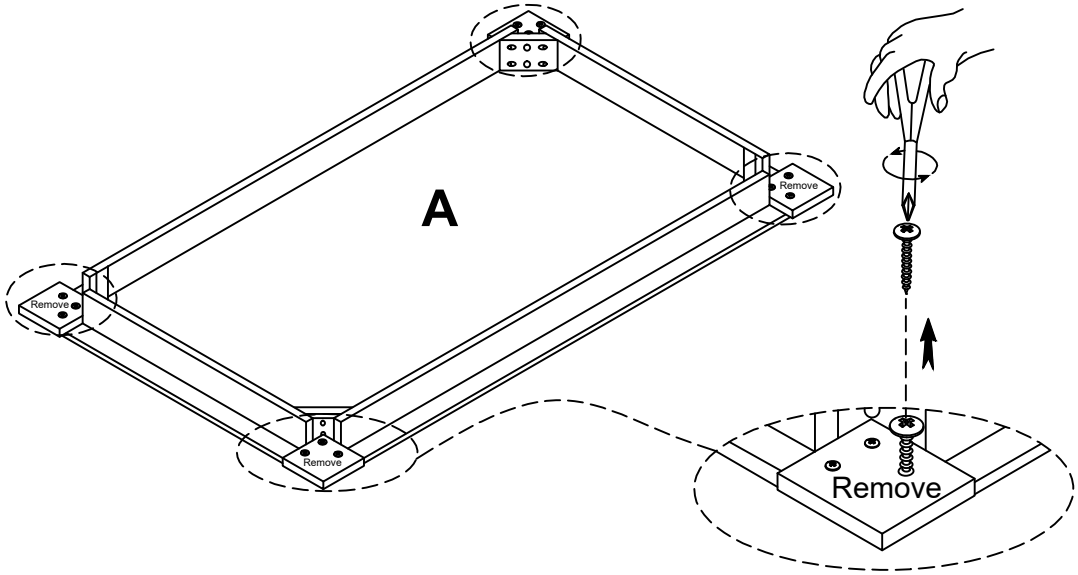

2 Place the Table Top (A) upside down on a floor with a piece of cloth or carpet underneath to prevent from scratching. Attach the Table Leg (B) to the Table Top (A) using Flat Washer (C), Lock Washer (D) and Hex Nut (E) with the Wrench (F). Do not fully tighten until all hardware is attached.

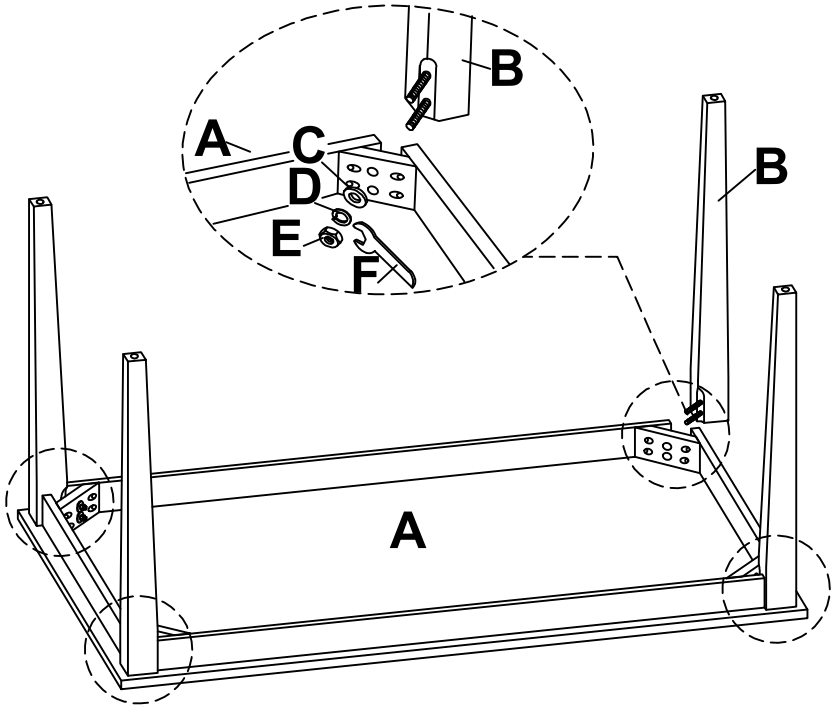

Cleaning & Care :
Treat surfaces with care. Surfaces are resistant to scratches but are not scratch resistant. Clean surfaces with a dry or damp soft cloth. Do not use abrasive cleaners. Hardware may loosen over time. Periodically check that all connections are tight.

ASSEMBLY INSTRUCTIONS

LADDER BACK SIDE CHAIR

A Chair Back

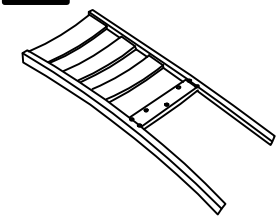

1 pc

B Seat Cushion

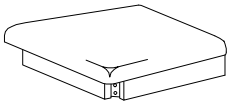

1 pc

C Front Leg

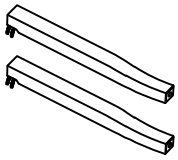

2 pcs

D Bolt
Ø1/4" x 3"

4 pcs

E Bolt
Ø1/4" x 1-9/16"

3 pcs

F Lock Washer
Ø5/16" x 9/16"

11 pcs

G Flat Washer
Ø5/16" x 3/4"

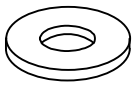

11 pcs

H Hex Nut
Ø5/16" x 1/2"

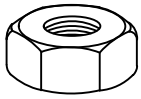

4 pcs

I Allen Key
3/19"

1 pc

J Wrench
1/2"

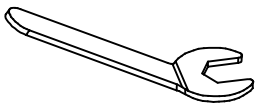

1 pc

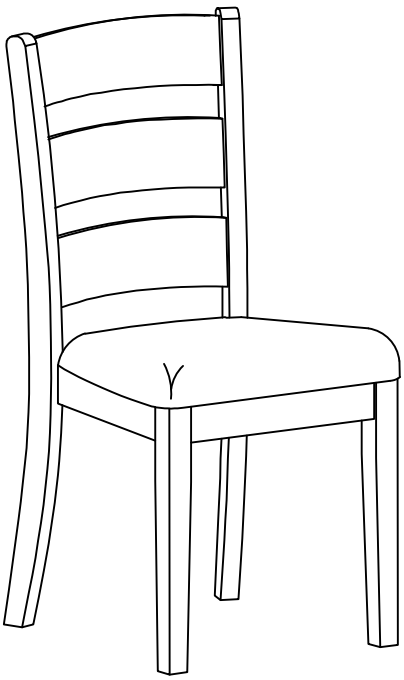

This page lists all the contents included in the box. Please take the time to identify the hardware as well as the individual components to this product. As you unpack and prepare for assembly, place the contents on a carpeted or padded area to protect them from damage.

1 Attach the Front Leg (C) to the Seat Cushion (B) using Flat Washer (G), Lock Washer (F) and Hex Nut (H) with the Wrench (J).

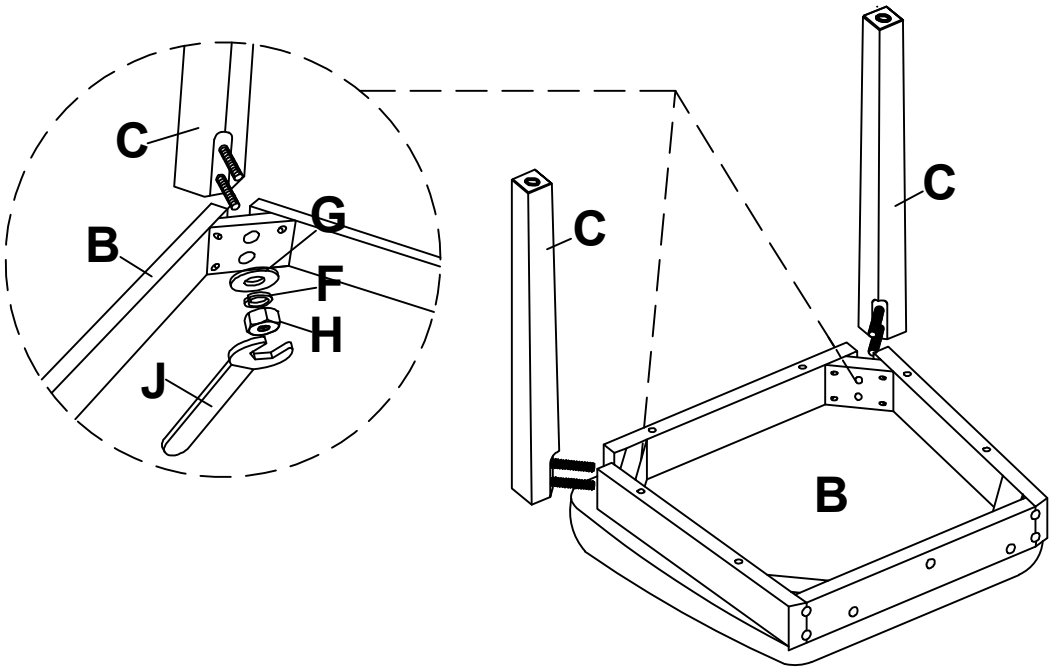

Take the Allen Wrench and turn the bolts until the legs are secured.
DO NOT TIGHTEN THE BOLTS COMPLETELY.
Stop when you feel you are adding force to tighten the bolts.

2 Attach the Seat Cushion (B) to the Chair Back (A) using Bolt (D), Lock Washer (F) and Flat Washer (G) at the corners. Use Bolt (E), Lock Washer (F) and Flat Washer (G) for the middle holes of the back rail. Secure both parts with the Allen Key (I).

Stand the chair on an even surface and check for balance. If the chair wobbles slightly, apply downward pressure on the uneven leg and tighten the bolts to correct the imbalance. Once the chair is balanced, apply downward pressure evenly in the center of the chair and tighten all bolts, being careful not to over-tighten beyond the hole depth.

Helpful Tip:
While tightening the bolts from underneath, have someone sit in the chair.

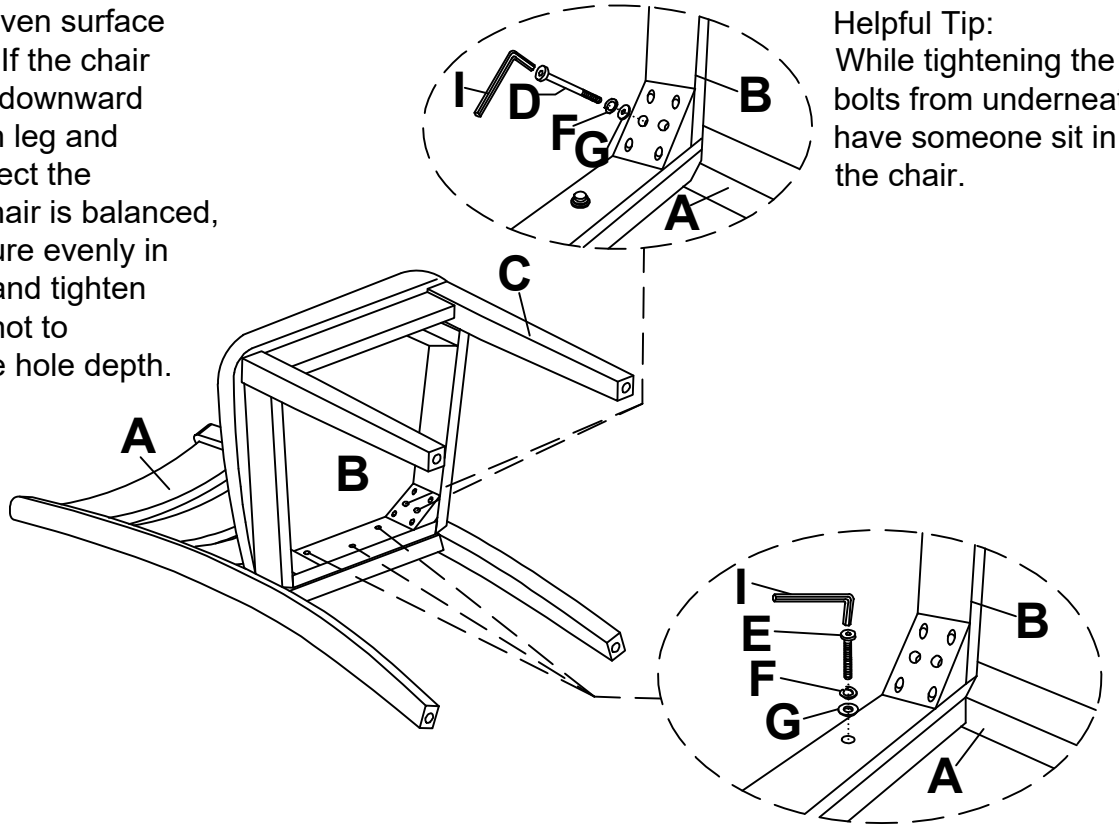

Cleaning & Care :
Treat surfaces with care. Surfaces are resistant to scratches but are not scratch resistant. Clean surfaces with a dry or damp soft cloth. Do not use abrasive cleaners. Hardware may loosen over time. Periodically check that all connections are tight.

ASSEMBLY INSTRUCTIONS

47"W BENCH

A Bench Top

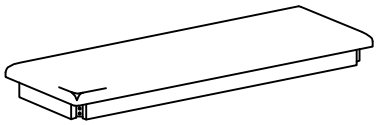

1 pc

B Bench Leg

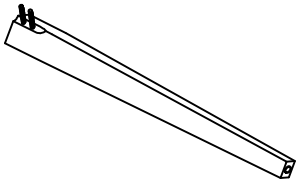

4 pcs

C Flat Washer
Ø5/16" x 3/4"

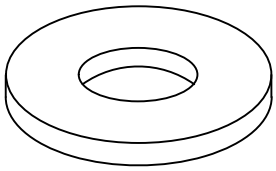

8 pcs

D Lock Washer
Ø5/16" x 9/16"

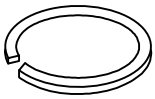

8 pcs

E Hex Nut
Ø5/16" x 1/2"

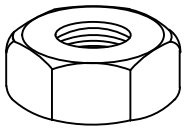

8 pcs

F Wrench
1/2"

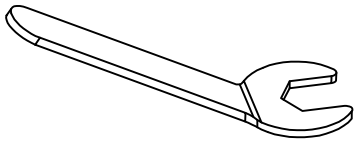

1 pc

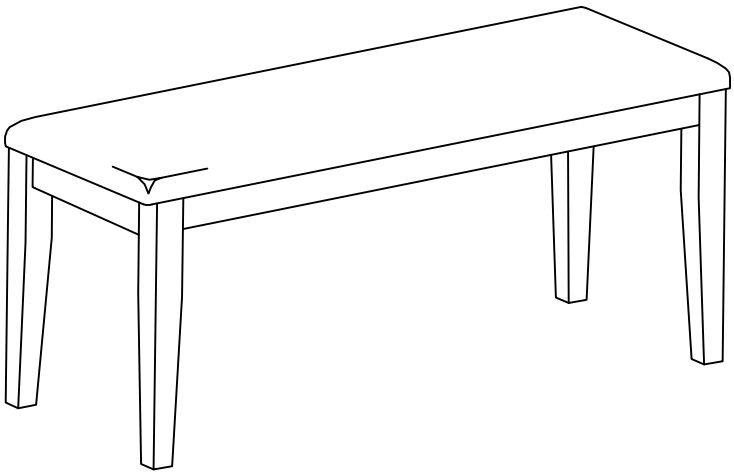

This page lists all the contents included in the box. Please take the time to identify the hardware as well as the individual components to this product. As you unpack and prepare for assembly, place the contents on a carpeted or padded area to protect them from damage.

1 Place the Bench Top (A) upside down on a floor with a piece of cloth or carpet underneath to prevent from scratching. Attach the Bench Leg (B) to the Bench Top (A) using Flat Washer (C), Lock Washer (D) and Hex Nut (E) with the Wrench (F). Do not fully tighten until all hardware is attached.

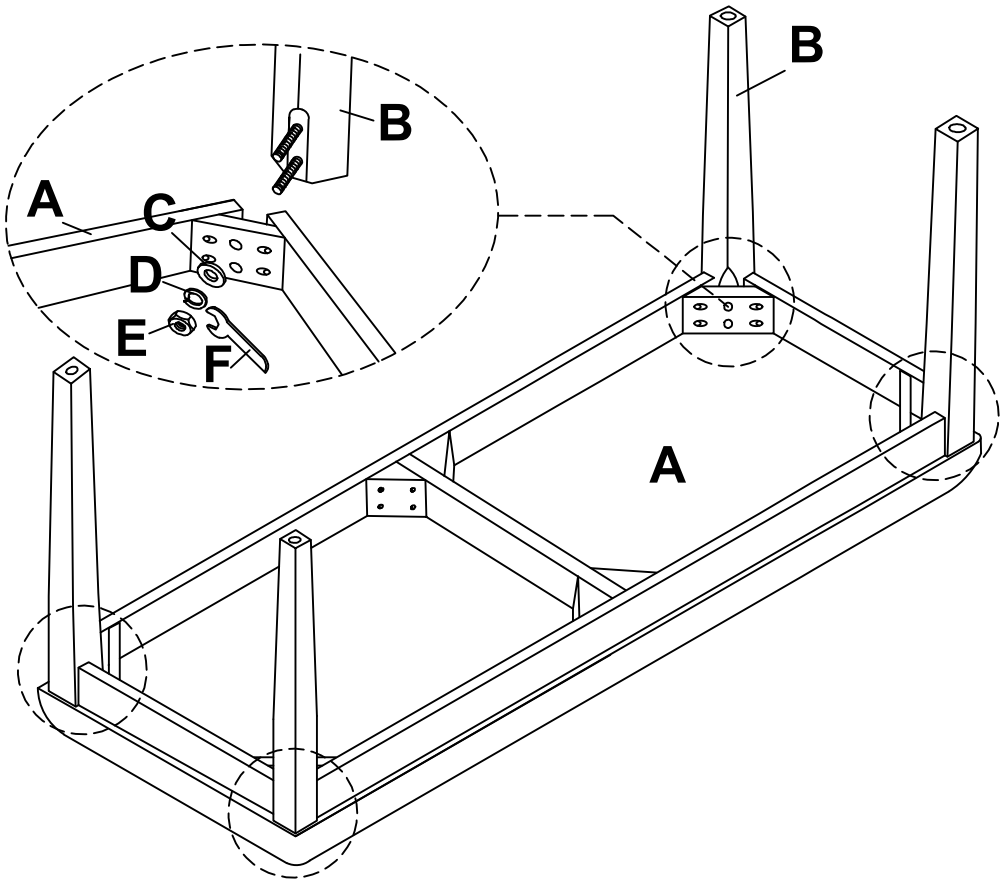

Cleaning & Care :
Treat surfaces with care. Surfaces are resistant to scratches but are not scratch resistant. Clean surfaces with a dry or damp soft cloth. Do not use abrasive cleaners. Hardware may loosen over time. Periodically check that all connections are tight.