Assembly Instructions

Thank you for Purchasing this quality product.Be sure to check all packing material carefully for small parts that may have come loose inside the carton during shipment. Note! Loosely thread all screws/bolts first. Once the item is assembled then completely tighten.)

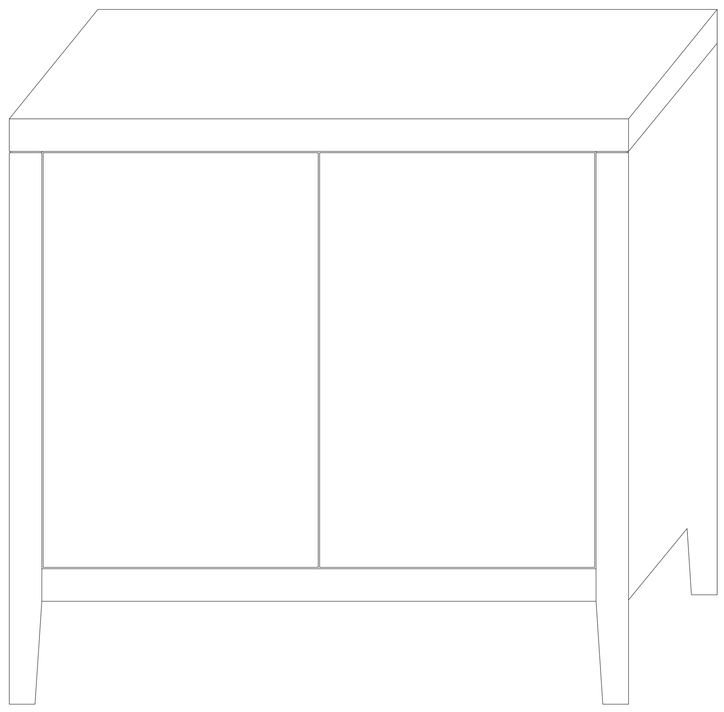

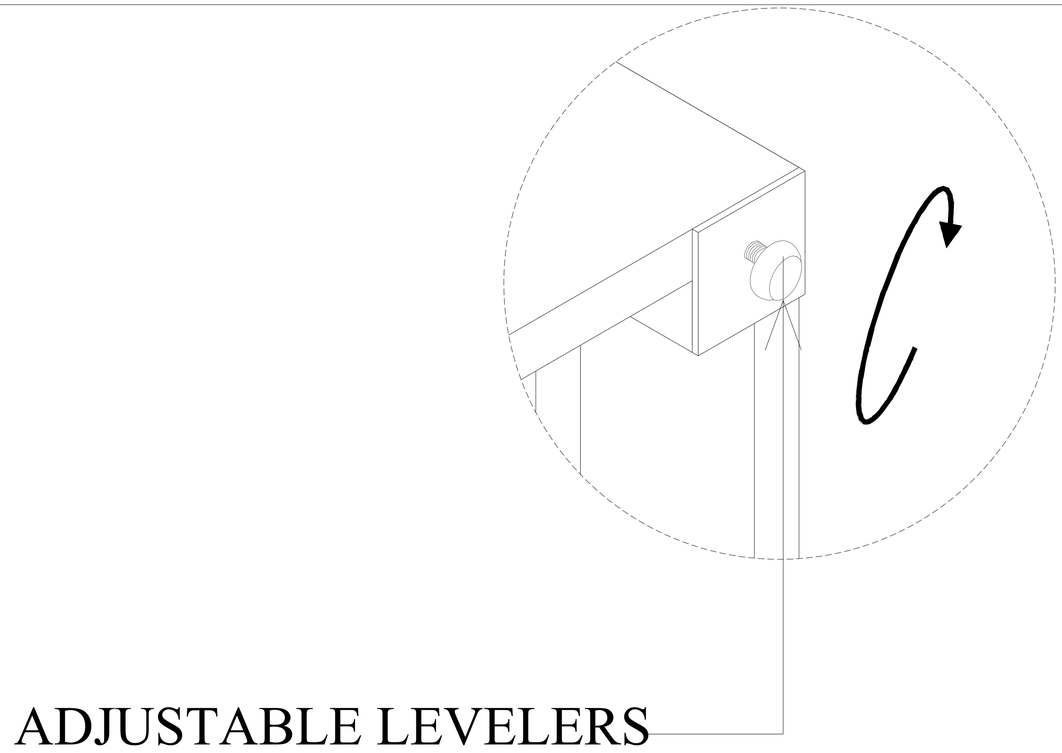

Tips for aligning doors:

Tip A: Sometimes the doors will not line up because of an uneven floor surface the furniture rests on. In that case, try adjusting the levers found on the bottom of each foot to aid in correcting.

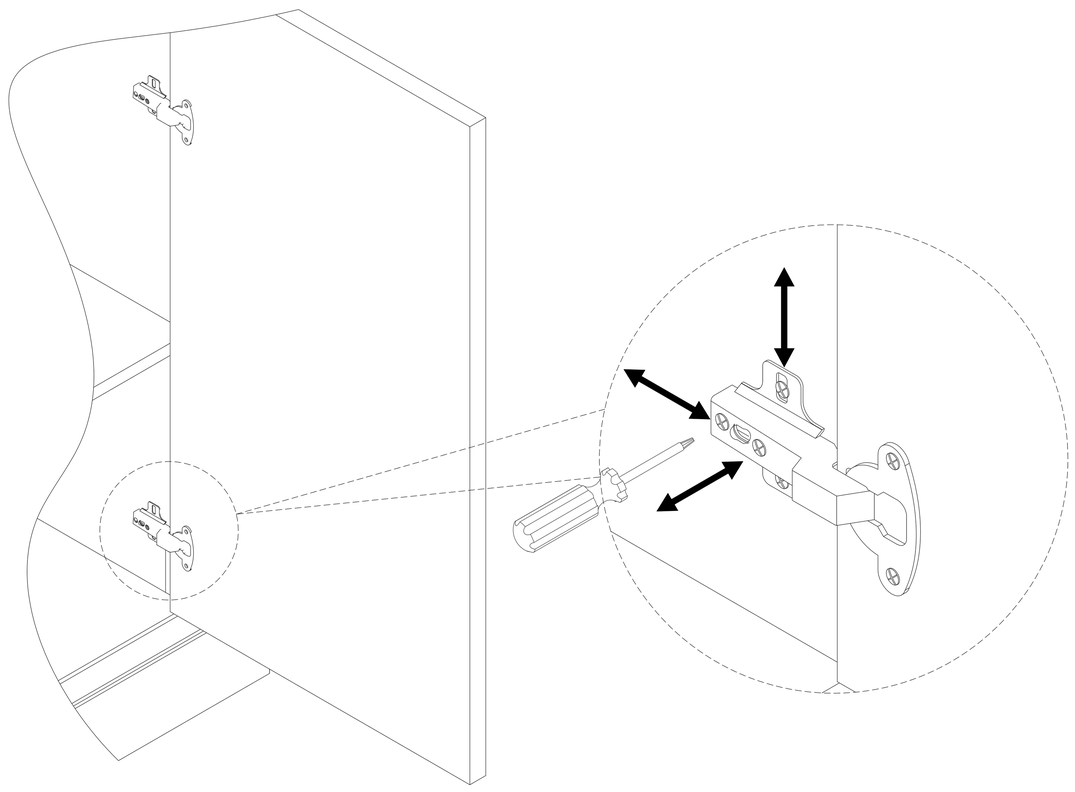

Tip B: If A does not help, you might want to take a step further by adjusting the hinges on the doors. Please refer to the step by step figure instructions down beiow.