ITEM NO.	PART NUMBER	DESCRIPTION	QTY.
1	BPRD	Base	2
2	TU12-2	Support	2
3	BL34S2T-1.25	Lock Support	2
4	TU34-18",24",30",36"	Tube	2
5	HKTT	JOINER	2
6	BL34ST-1.25	Lower End Ball	2

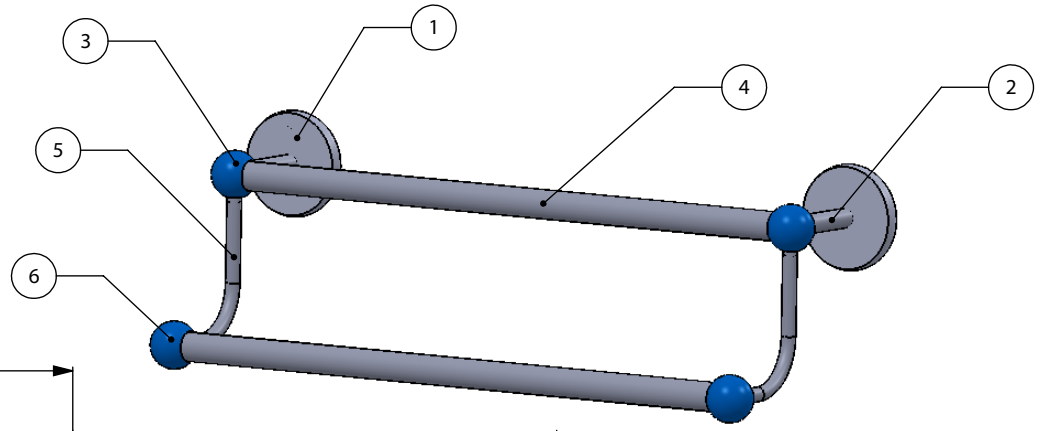

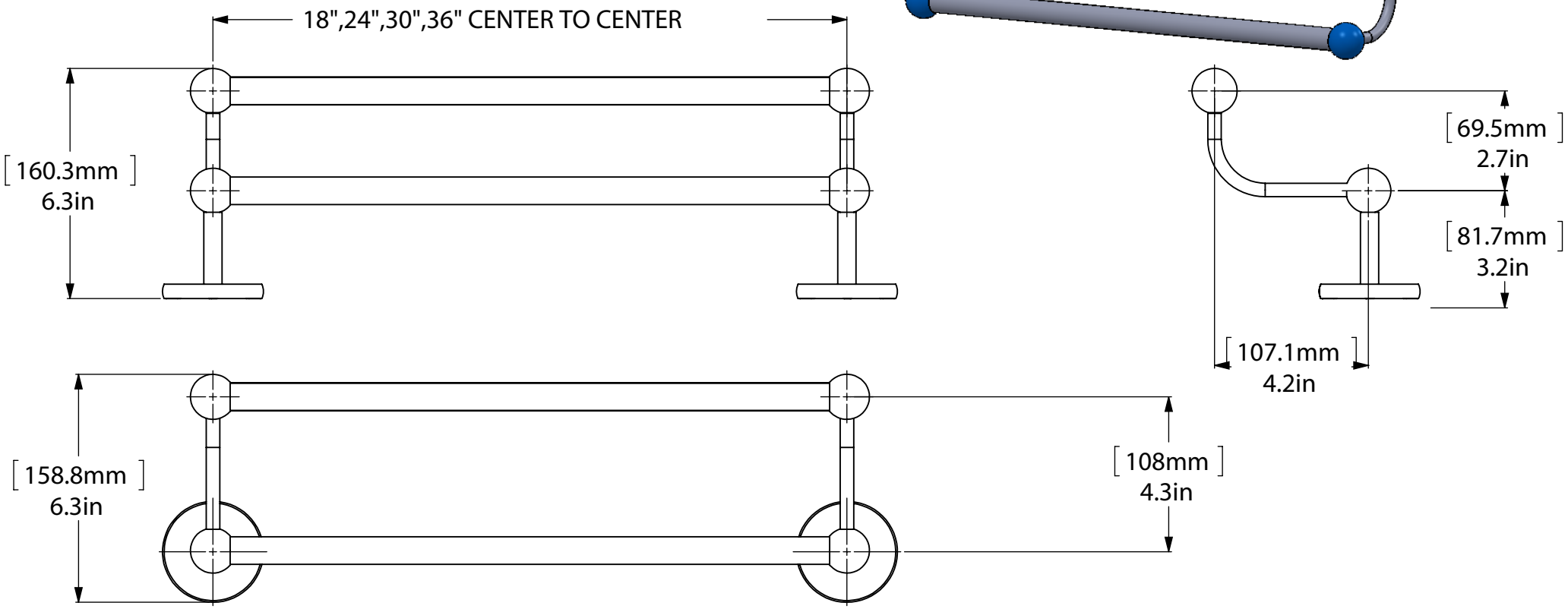

UNLESS OTHERWISE STATED											
DO NOT SCALE DRAWING	X.XXX	+/-0.025		INITIALS	DATE	ITEM	QTY	DRG/PART NO	CLIENT:		
CHAMFER ALL EDGES 0.5X45°	X.XX	+/-0.1	DESIGNED		IJM	MATERIAL	BRASS		WEIGHT	FINISH	TBD
	X.X	+/-0.25	DRAWN		IJM	HEAT TREAT	NA			QUANTITY	
DRAWING ISO	X	+/-0.75	CHECKED		R. ANDRIS	CUSTOMER			CUSTOMER No	---	
	ANGLES		PROJ.ENG			DESCRIPTION:					
	X.XX	+/-0.05°	SAFETY								
	X.X	+/-0.1°	APPROVED		R. ANDRIS	P1072					
	X	+/-0.5°	FILENAME	P1072							
FIRST ANGLE PROJECTION	MACHINED FINISH	3.2							SCALE 1:4	SHEET: 01	A4