Welcome home!

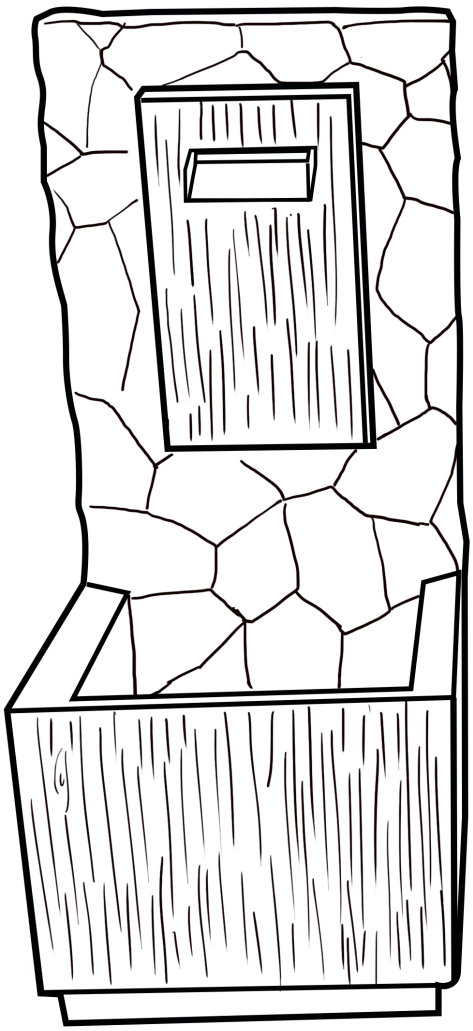

Outdoor 32" Waterfall Fountain Yard Décor

Warranty

All components are warranted by the manufacturer for a period of 30 days after the date of purchase by the original owner against defects in materials & workmanship under normal use. If it is appropriate to replace your product due to specific defects, the manufacturer will replace the purchase with the same product or a comparable product.

For specific instructions on how to obtain warranty service for your product, please contact Customer Support using the contact information provided.

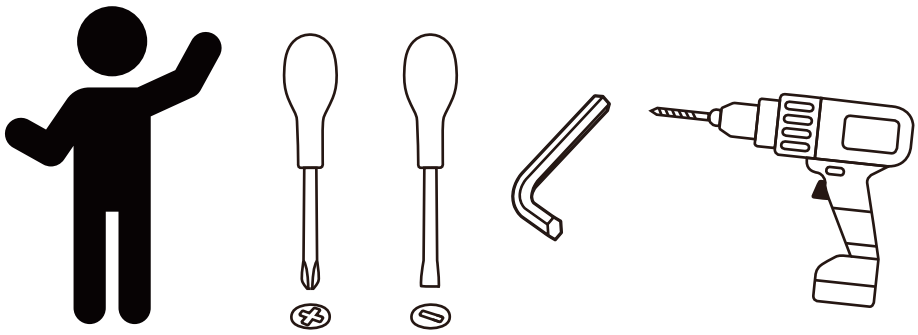

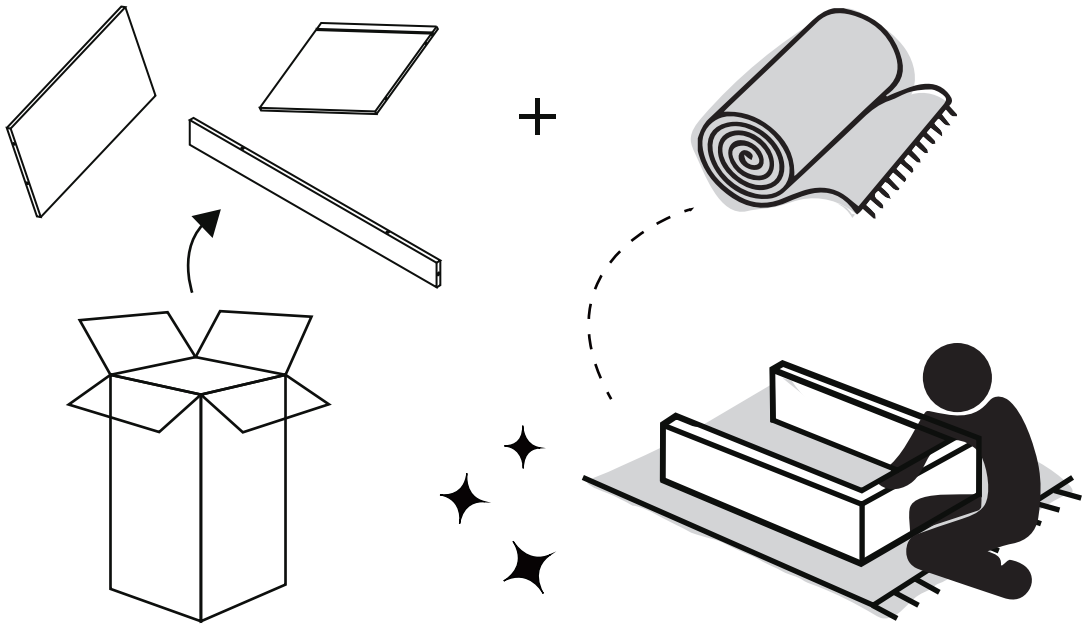

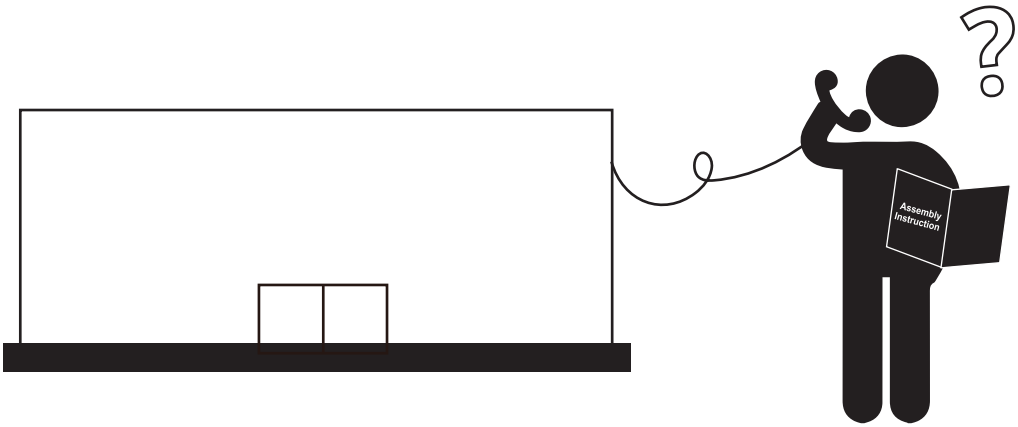

Any questions? Please contact our customer support team by email or phone.
We are always ready to assist you! Please have the product item number ready,
(located on the first page of this instruction manual) and your order number available.

Assembly Instructions

See pages 6-8 for an Exploded Drawing, List of Product Parts, and a Step-by-Step illustration of the assembly.

1. Unpack the contents of the box.
2. Assemble the fountain on a surface that will not be damaged by water.
3. Please place the water control unit upright into the basin and draw the water control unit power cord out through the opening at the bottom of the fountain.
4. Add clean water to the lowest bowl (basin) of the fountain. The water level should be approximately 1 in / 25 mm below the top of the basin.
5. Connect the water control unit to a GFCI outlet and the product will begin to function as intended.
6. If the water flow is higher or lower than desired, adjust the regulator dial/slide on the front of the water control unit, (+) to increase the water flow or (-) to decrease the water flow.
7. The LED lights are preassembled, but they are replaceable. When replacing them, please refer to Steps 1 and 2.
8. To eliminate the possibility of water damage around your fountain, check for leaks and excessive splashing after the initial setup of your fountain. It is highly recommended to place the fountain in an area where it cannot cause damage due to excessive splashing.
9. Do not leave your fountain running for extended periods of time when no one is present to observe the performance.
10. Check the area around your fountain on a regular basis to ensure that there is no leakage.

Important Safety Instructions

TRANSFORMERS

When using electrical products, basic precautions should always be practiced including the following:

1. READ AND FOLLOW ALL SAFETY INSTRUCTIONS.
2. Read and follow all instructions that are on the product or provided with the product.
3. For a cord-connected or direct plug-in power unit, do not use an extension cord.
4. Reference the National Electrical Code, ANSI/NFPA 70, specifically for the installation of wiring and clearances from power and lighting conductors.
5. Installation work and electrical wiring must be done by qualified person(s) in accordance with all applicable codes and standards, including fire-rated construction.
6. For a cord-connected or direct plug-in power unit, do not install or use within 3.05 m / 10 ft of a pool.
7. For a cord-connected or direct plug-in power unit, do not use in a bathroom.
8. For a cord-connected power unit, user should pay attention to below statement
   ⚠WARNING: Risk of Electric Shock. When used outdoors, install only to a covered Class A GFCI protected receptacle that is weatherproof with the power unit connected to the receptacle. If one is not provided, contact a qualified electrician or proper installation. Ensure that the power unit and cord do not interfere with completely closing the receptacle cover.
9. ⚠WARNING: Risk of Fire. Installation involves special wiring methods to run wiring through a building structure. Consult a qualified electrician.
10. For a unit intended to be mounted greater than 0.3 m / 1 ft from the ground surface:
    ⚠WARNING: Risk of Electric Shock. Mount the unit at a height greater than 0.3 m / 1 ft from the ground surface.

WATER CONTROL UNIT

⚠ CAUTIONS

1. To avoid the risk of electric shock from the water control unit, observe the following cautions:
2. This water control unit is intended to be used with water only.
3. Do not use the water control unit in water exceeding 86ºF / 30ºC.
4. Do not use the water control unit in flammable liquids.
5. Do not use the water control unit for industrial purposes.
6. Do not use the water control unit in vehicles or on board ships or aircraft or swimming pools.
7. Do not use the water control unit in location where special conditions prevail, such as the presence of a corrosive or explosive atmosphere (dust, vapor or gas).
8. Do not let the water control unit run dry. Water control unit must be completely submerged for proper operation and cooling.
9. Do not lift the water control unit by its power cord.
10. Keep the plug dry. Do not expose the plug to water or steam.
11. Before connecting to the power source, make sure that the water control unit is assembled and completely submerged in water.
12. Always disconnect the water control unit from the power source before performing any maintenance on the water control unit, lights (if equipped), or fountain.
13. Do not exceed the voltage shown on the water control unit.
14. Check the water level regularly to ensure the water control unit is completely submerged during operation.
15. Do not add water while operating the product. Always disconnect the water control unit from the power source before adding water.

⚠ WARNING

1. To reduce the risk of electric shock, this water control unit is equipped with a grounding conductor and grounding-type attachment plug.
2. Be certain that it is connected only to a properly grounded, grounding-type receptacle. Use only portable self-contained fountains no larger than 5 ft / 1.52 m in any dimension.
3. If equipped with a 3-prong, grounded-type plug, do not remove the grounding pin from the plug on the power cord.

Care and Maintenance

Water:

1. Distilled water is always recommended to fill your fountain, or filtered water if distilled is not an option. (Tap water may contain minerals and chemicals that may build up and leave residue.)
2. Check the water level regularly to make sure the water control unit is completely submerged during operation. This ensures proper cooling and prevents overheating of the water control unit. In summer months or in dry, hot climates, water will evaporate very quickly. The size of the fountain will also impact the rate of evaporation – the larger the fountain, the quicker water will evaporate.

Cleaning Frequency:

1. Regular cleaning of your fountain and water control unit will depend on where it is located. When the fountain or water control unit is visibly soiled, or there is a decrease in performance, please follow the care and maintenance tips below. Failure to clean and maintain the water control unit will result in overheating.
2. Keep the fountain water and water control unit clean and clear of debris. Remove any leaves or other debris every other day.
3. Clean your fountain monthly to prevent mineral buildup and contamination, which may clog the water control unit. (This frequency may vary depending on where your fountain is located.)
4. Water treatments that prevent algae growth and mineral deposits and pre-filters that prevent clogging by leaves or debris are available at your local home and garden stores. Do not use bleach as it may be harmful to pets and wildlife and may damage your fountain.
5. Disconnect the water control unit from its power source and empty the water from the fountain. (Do not tip the fountain to empty the water – use a siphon water control unit or small bucket.) Use any gentle household cleanser and a soft brush or cloth to clean the fountain. Avoid harsh chemicals, abrasives, or rough scrubbing which may damage the finish of your fountain.

Cleaning the Water control unit:

Disassemble the water control unit by removing the filter and regulator/impeller plate. Remove the impeller/rotor assembly by gently pulling on the impeller blades. Use a soft cloth or brush to clean the area inside the water control unit housing. Clean the filter, gland, and impeller in warm, soapy water. Reassemble the water control unit and inspect it for proper operation.

Operation:

1. Although it is not required, water control unit generally last longer if left running continuously, reducing wear and tear from starting and stopping. Be sure to keep the fountain ¾ full of water.
2. If mosquitoes are a problem in your area, it is recommended to run the fountain as much as possible to prevent standing water, where mosquitoes breed. You may also add a few drops of anti-mosquito water treatment to the fountain water. (Also available at local home and garden stores.)
3. If the fountain is not in use for an extended period, disconnect the power and empty the fountain.
4. Do not operate the fountain in temperatures below 41°F / 5°C to prevent frost damage. During winter months, before the temperatures drop, disconnect the power, drain the fountain, and store it in a heated area. If the fountain is stored outdoors, disconnect the power, drain the fountain, and remove the water control unit and any lights. Once completely dry, cover the fountain with a tarpaulin.

Prevention:

1. Place the fountain in a location that it won't be susceptible to damage, or where splashes and potential leaks will not cause damage to the surrounding area.
2. Check for leaks and monitor the fountain for excessive splashing after initial installation on a regular basis.
3. If the fountain develops a leak or a visible crack is detected, plastic epoxy or Clear Silicone II sealant may be used. Turn the water control unit off, fill the fountain, and let the water sit for one week. The crack will appear white. Empty the fountain and seal the crack with plastic epoxy or Clear Silicone II sealant. (Also available at local home and garden stores.) Wait for the sealant to dry before refilling the fountain and using it again.

Non-Solar Lighting:

Your fountain may be connected to an outdoor-rated outlet timer to activate the lights during nighttime hours. Please note on some models, the lights do not operate separately from the water control unit, so when the lights are on, the water control unit is on, and vice versa.

Troubleshooting Guide

If the water control unit does not operate…

1. Check to make sure the water control unit is connected to a power source.
2. Check the water level to ensure the water control unit is completely submerged. Add water as needed.

If the water control unit operates, but, there is no water flow…

1. Check the water level to ensure the water control unit is completely submerged. Add water as needed.
2. Check the supply tube for any kinks or folds and correct.

If the water control unit operates, but there is no water flow and the water control unit is fully submerged and the supply tubing has no kinks…

1. Disconnect the water control unit from the power source.
2. Disconnect the supply tube from the water control unit outlet.
3. Check for clogs or holes and clean the tubing inside and outside if necessary.
4. Check for clogs and clean the water control unit inlets and outlet if necessary.
5. Place the water control unit back into the water outlet side up and then re-connect the water control unit to the power source.
6. Once the water begins to flow from the water control unit, re-connect the supply tubing to the water control unit outlet.
7. Check for any air trapped in the water supply tube which may prevent the water control unit from working.

If the water control unit runs with low or high water circulation…

1. Check and adjust the regulator dial or slide on the front of the water control unit. Adjust the dial/slide towards (+) to increase water flow or towards (-) to decrease water flow.

If the water control unit operates, but the water flow is uneven or non existent and the water control unit makes noise…

1. Check the impeller assembly for wear. Remove the front cover and regulator/impeller plate and remove the impeller assembly. Clean the impeller assembly and inspect for wear. If the rotor spins freely from the magnetic body, the impeller assembly is worn and needs to replaced. Contact customer service for replacement parts.

If the water control unit starts to make noise…

1. Check the water level to ensure the water control unit is completely submerged. If the water level drops below the water control unit intake, it may suck in air and cause the noise or the water control unit to completely stop working.
2. Move the water control unit away from the sides of the basin or place a piece of foam or sponge underneath the water control unit to isolate any vibration which causes the noise.

If the water starts to foam…

1. Check the water level to ensure the water control unit is completely submerged. If the water level drops below the water control unit intake, it may suck in air and cause the water control unit to 'spit' and foam the water.
2. Add a few drops of anti-foaming water treatment, available at your local home and garden store, to the fountain water.

If the water flow is uneven…

1. Gently sweep across the water surface to achieve even water flow across the face of the fountain.
2. Check the top of the basin to ensure it is level. If not, shim the basin from the bottom until the top spillway is level or has achieved even water flow all around.

LIMITATIONS

All components are warranted by the manufacturer for a period of 30 days after the date of purchase by the original owner against defects in materials & workmanship under normal use. If it is appropriate to replace your product due to specific defects, the manufacturer will replace the purchase with the same product or a comparable product.

GENERAL TERMS & CONDITIONS

1. Proof of purchase is required to request a claim under this warranty.
2. This warranty applies only to manufacturer errors & defects. The warranty applies to the following:
   a. Breaks and cracks in the product that originated with the manufacturer
   b. Missing pieces
   c. Stains that occurred during the manufacturing process
3. This warranty does not apply to the following:
   a. Damage due to improper loading, handling, or transportation
   b. Any costs associated with the installation and removal of products or parts subject to this warranty
   c. Acts of God
   d. Products which have been subject to negligence, abuse, accident, misapplication, tampering, alteration, or modification
   e. Products which have been subject to improper installation, operation, maintenance, repair, or storage
   f. Products which have been subject to defects that occur when this product is used incorrectly and/or outside of normal application purposes
   g. Products which have had, including but not limited to, operational failures caused by corrosion, rust, or other foreign materials in the system, or operation at pressures in excess of recommended maximums
   h. All other possible defects not mentioned here that would not have occurred during manufacturing or during correct, routine use of the item

INSTRUCTIONS

For specific instructions on how to obtain warranty service for your product, please contact Customer Service using the contact information provided. In most circumstances, you will need to return your product either in its original packaging or in equally protective packaging to the address specified by Customer Service.

Before delivering your product for warranty service, it is your responsibility to remove all personal items and belongings you may have stored in your product. Teamson is not responsible for the possible loss, destruction, or damage of any personal items or belongings that have been sent alongside the product.

DISCLAIMER

Any oral statements made about the product by the seller, the manufacturer, the representatives, or any other parties do not constitute warranties, should not be relied upon by the user, and are not part of the contract for sale. The sellers and manufacturers only obligation, and buyers only remedy shall be for the manufacturer to either replace and /or repair at the manufacturers sole discretion, the product as described above. Neither seller nor the manufacturer shall be liable for any injury, loss or damages for lost profits, lost sales, injury to person or property, or any other incidental or consequential loss arising from any cause whatsoever, no matter whether based upon warranty, contract, negligence or other misuse, and the buyer and user agree that no other remedy shall be available to them. Before using, the buyer and user shall determine the suitability of the product for intended use, and assume all risk and liability whatsoever in connection therewith. The warranty and remedy described in this limited warranty is an exclusive warranty and remedy in lieu of any other warranty or remedy expressed or implied. All other warranties and remedies are hereby expressly excluded, including but not limited to any implied warranty of merchantability of fitness for any particular purpose.

OTHER LEGAL RIGHTS

This warranty gives the buyer and user specific legal rights, and buyer and user may also have other rights which vary from state to state. Some states do not allow exclusions or limitation of incidental or consequential damages, so the above limitations or exclusions may not apply to you.

Exploded Drawing

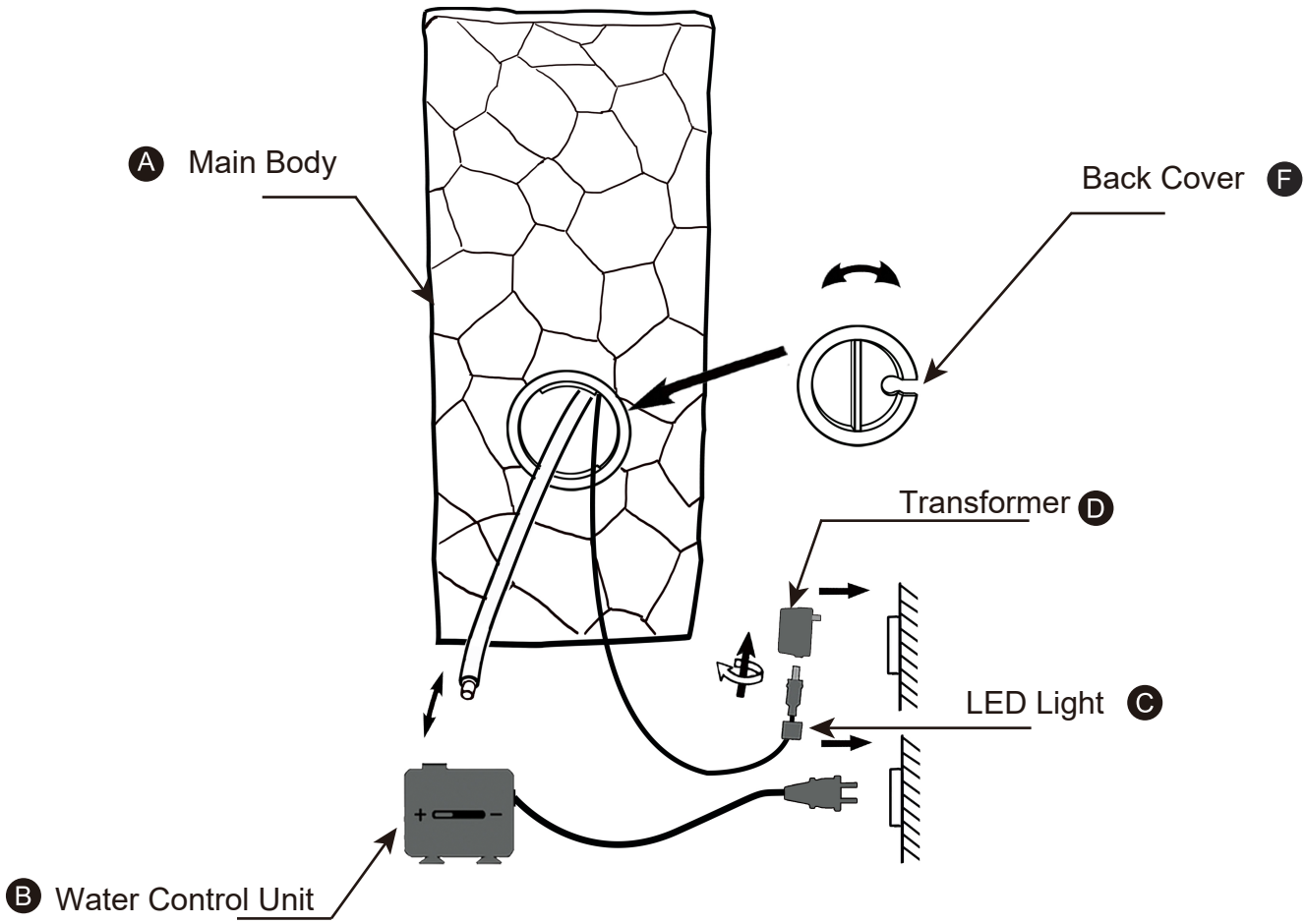

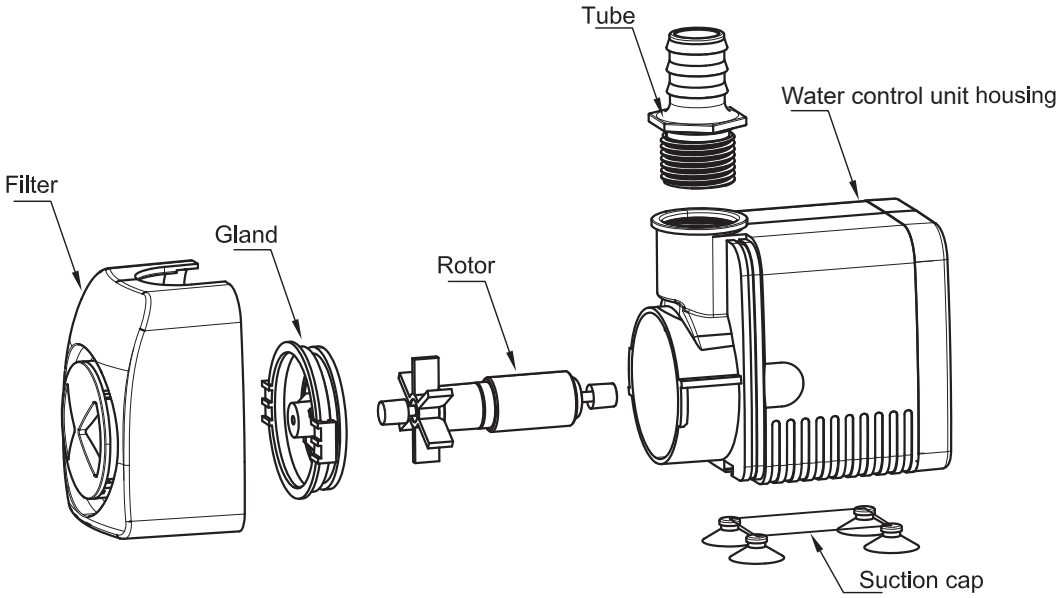

Product Parts

A

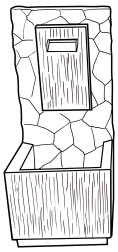

Main Body
1 PC

B

Water Control Unit
1 PC

C

LED Light(Pre-assembled)
1 PC

D

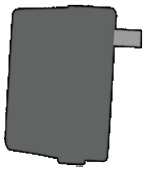

Transformer
1 PC

E

Brush
（Cleaning water control unit）
1 PC

F

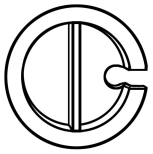

Back Cover
1 PC

Step 1

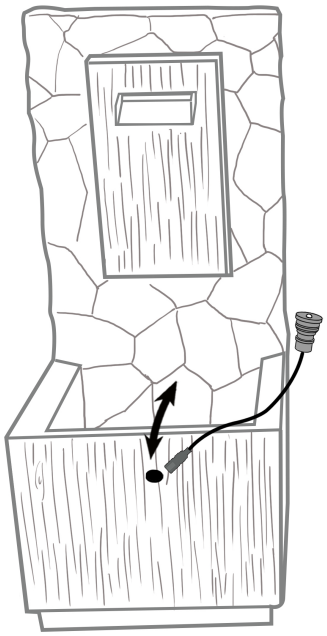

Step 2

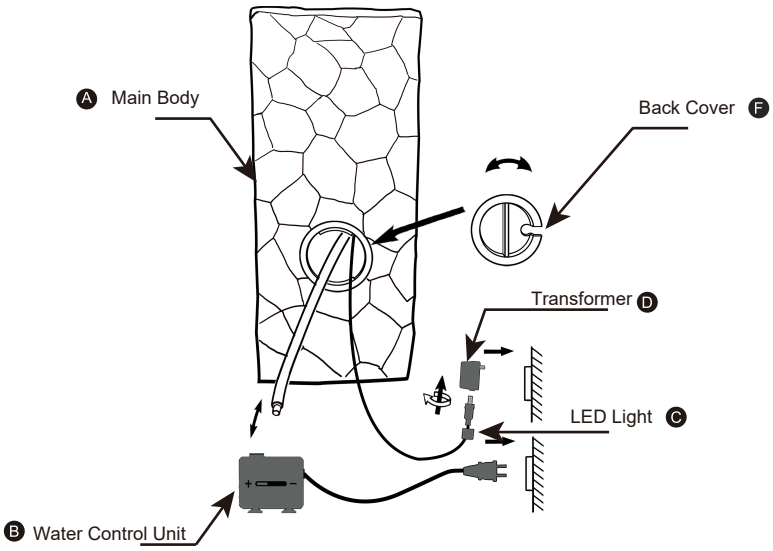
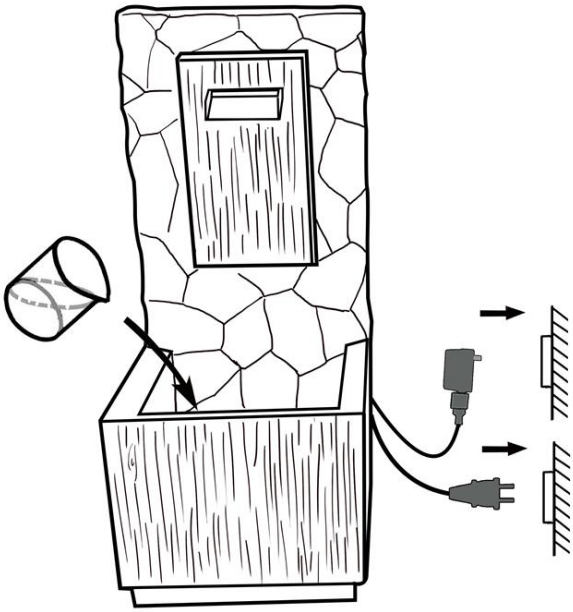
Step 3