USER'S MANUAL

DINING CHAIRS

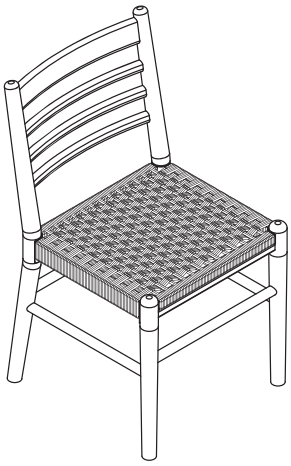

Guide of Manual

★ Thanks for your choice. **We will do our best to provide customer service for everyone.**

★ Please check to make sure all parts are included as stated when you unpack. If there are parts missing or wrong, please contact us, **we will expeditiously provide reissue accessories, compensation or other services.**

★ Instruction should be read carefully. But the manual may not cover every detail of all possible situations and steps. **Please contact us if further information and help are needed. We will respond in a timely manner.**

★ **Please be patient that the other items are on the way if you buy more than one product.**

Warning

- It's kindly advised to assemble this product on a carpeted floor to protect it from being scratched.
- Small parts are included. Please keep the product away from children while assembling. Do not let children play or jump on the product.Do not stand on the item or use as a step ladder.
- Please pay attention to the sharp corners during assembly. We recommend the use of gloves to prevent the undesired injury.
- Prior to use, please check to see if there's any loosening screw or part. Make sure that each screw and part is correctly installed and securely fastened.
- Usually it's unnecessary to use electric drill. Please at a low gear if you need.

Care and Maintenance

- Use a soft, clean cloth that will not scratch the surface when dusting.
- There's no need to use furniture polish. If you need, test it first in an inconspicuous area. Using solvents of any kind on your furniture may damage the finish. Never use water to clean your furniture as it may cause damage to the finish.
- Liquid spills should be removed immediately. Gently blot the spill with a soft clean cloth to avoid rubbing.
- Oil sealing regularly is not needed.

Further Advice About The Furniture Care

- It is best to keep your furniture in a climate-controlled environment.
- Do not expose the product to the hot sun for a long time, and don't keep the item near to heat and fire sources such as heat vent, stove, fireplaces, radiators, etc.
- Following these important and helpful tips will help retain your furniture's performance even when it ages.
- Periodically (every 90 days) make sure the screws are fully tightened.

⚠ MAX WEIGHT CAPACITY:350LBS
DO NOT STAND ON THE ITEM

Parts List & Assembly Instruction

1. Make sure all parts are in the package.
2. "+" in below list indicates that additional pieces are replacement parts.
3. Do not fully tighten anything until all screws, nuts, washers and bolts are in place.

Parts List

① x 1pc	② x 1pc	③ x 2pcs	④ x 1pc
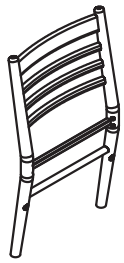	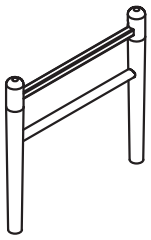	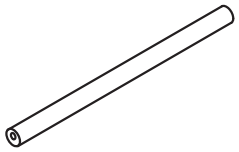	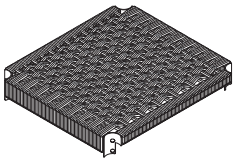

Hardware List

A x 4+1pcs M6x35mm	B x 8+1pcs M8x30mm	C x 1pc	D x 4+1pcs
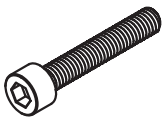	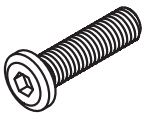	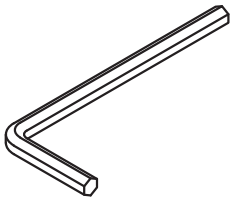	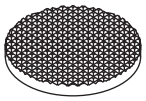

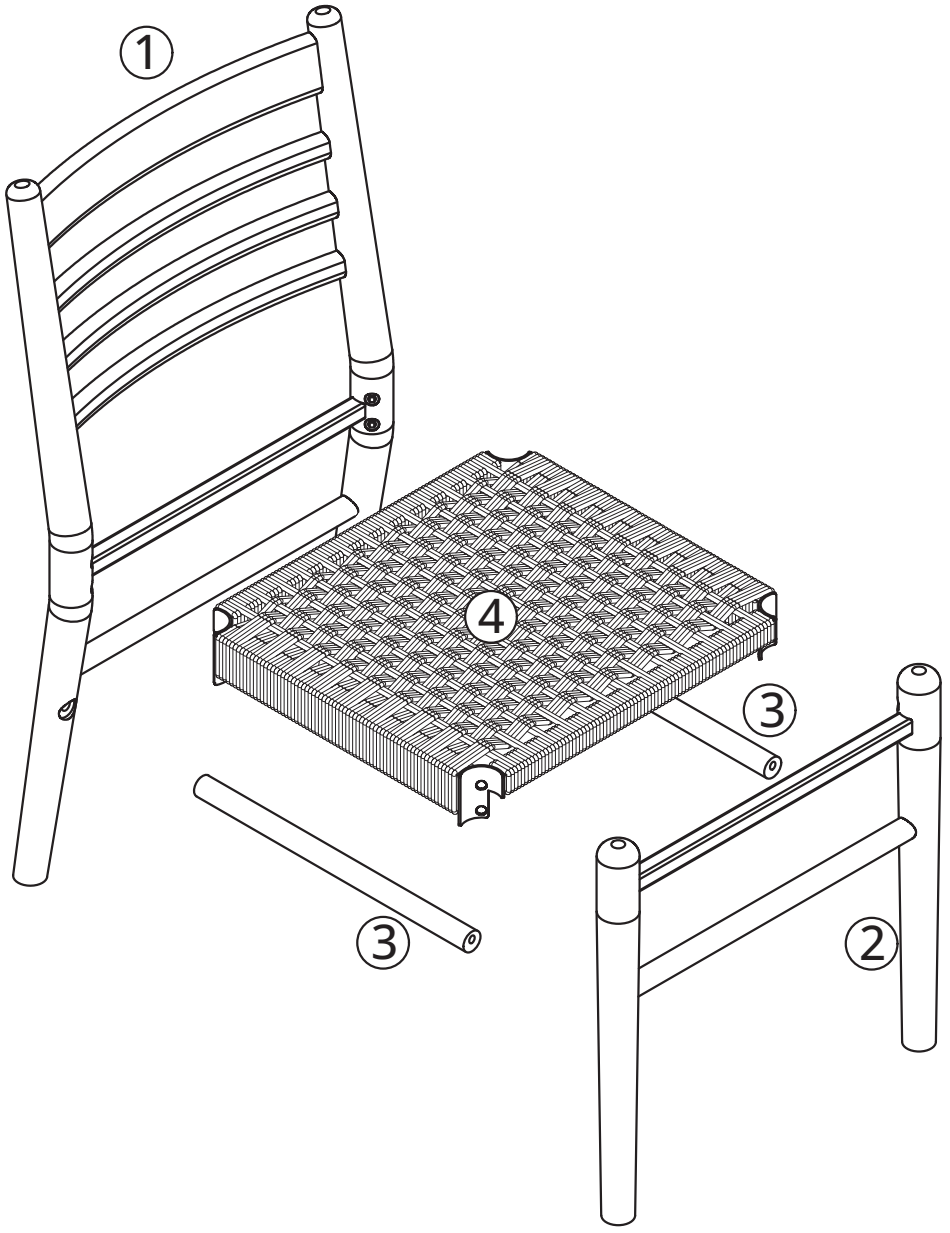
1
4
3
3
2

Step1

Following the direction of the arrows, install ② onto ④, then secure them with Bolts B to around 50%.

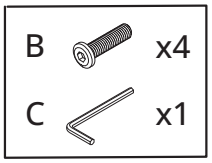

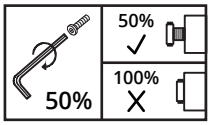

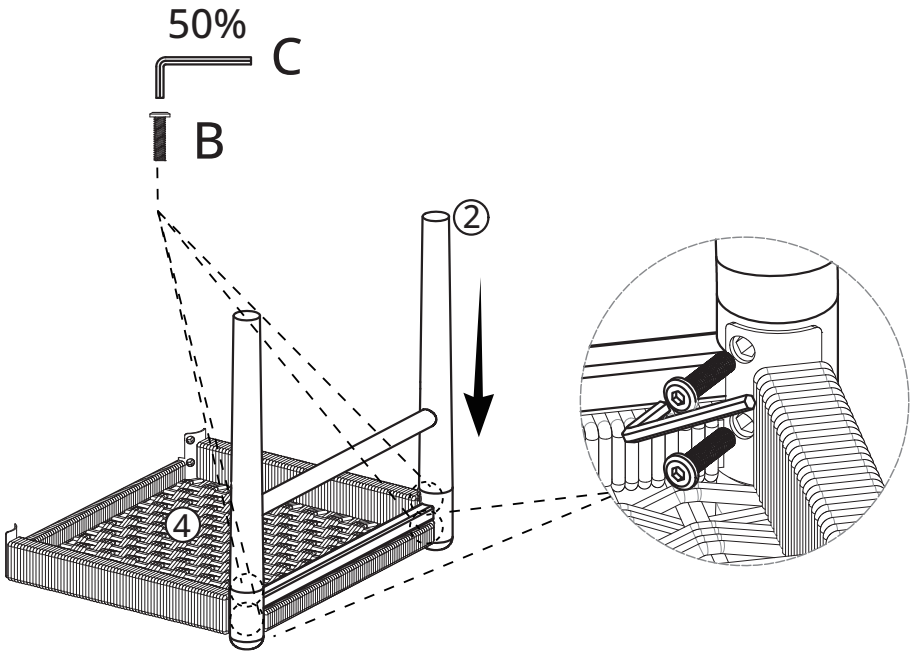

Step2

Following the direction of the arrows, install ① onto ④ , then secure them with Bolts B to around 50%.

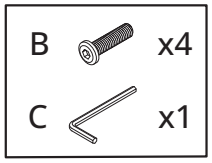

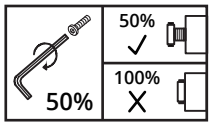

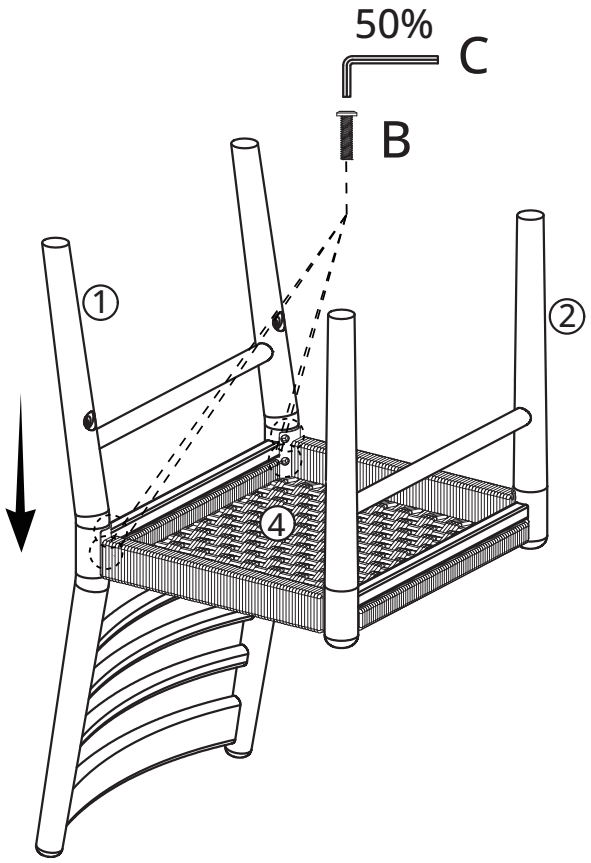

Step3

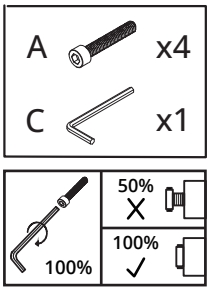

Insert ③ into the corresponding hole according to the indicated position, and then fully tighten it to 100% with Allen Wrench C. If it is difficult to insert ③ into the bracket, slightly loosen bolts B installed in step 1.

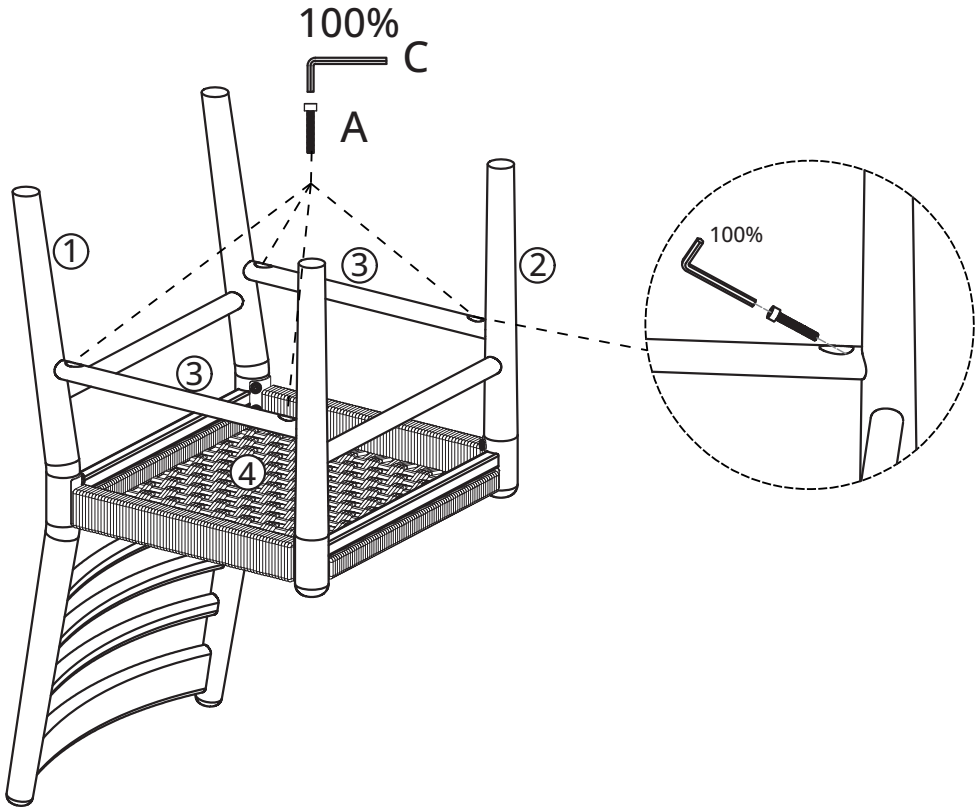

Step4



Install the felt pads onto the legs as shown.

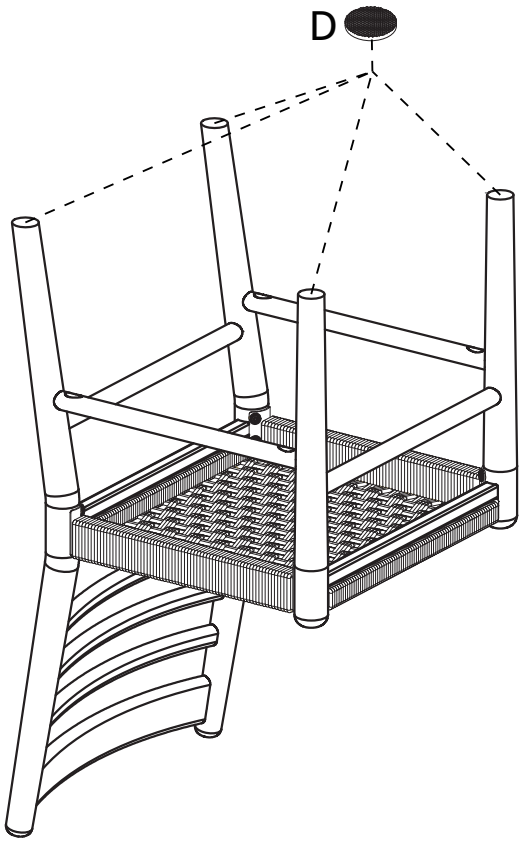

Step5

Please completely tighten the screws in this step.

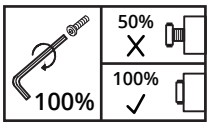

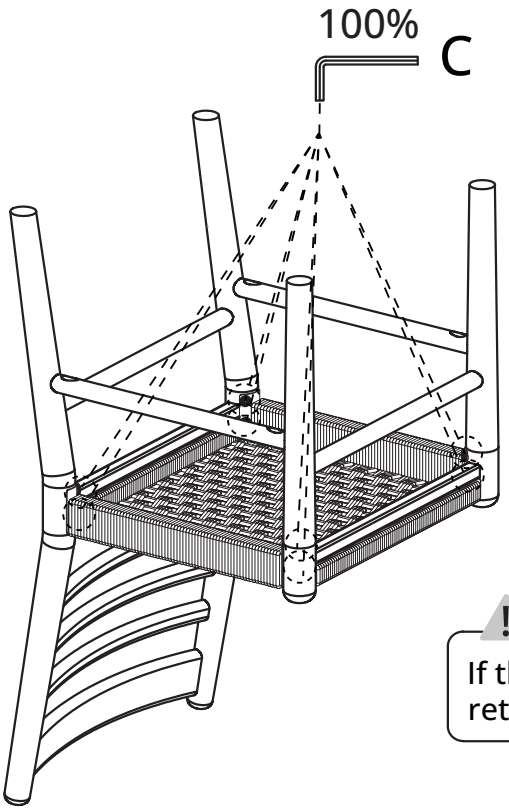

If there is slight instability, retighten all the screws again.

FINISHED

