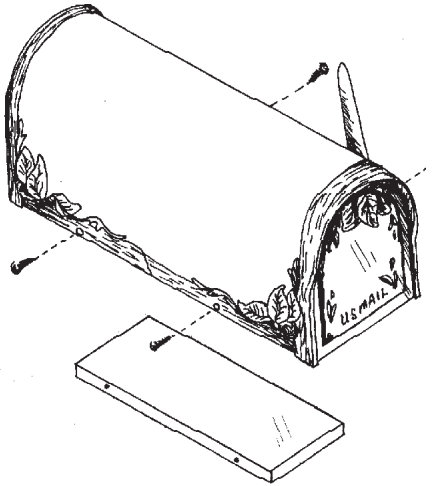


# Wrap Around Base Mailbox Post Kit SPK590

This stately support is crafted of durable cast aluminum.

KIT INCLUDES:
28"x10" Wrap Around Base (WRB - 1)
58" Standard Aluminum Post with welded mounting plate
**Not Included:** 7 1/2" x 16" 3/4" mounting board

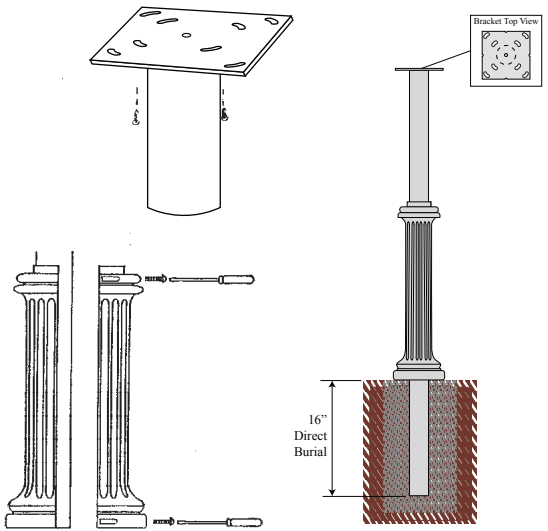


## INSTALLING YOUR MAILBOX WITH WRAP AROUND POST KIT :

1. Secure post in ground approximately 16" below surface level. U.S. Postal Service requires approximately 40" from ground to mailbox bottom.
2. Place Wrap Around Base around post by disassembling and reassembling around post per illustration at left.
3. Place board assembly on post and secure with screws (not provided).
4. Place mailbox on post assembly. Position such that mounting board does not interfere with door operation.
5. Secure mailbox to board using screws provided with mailbox.