BRAND-MAN GRILLS
MAKE YOUR MARK

OWNER'S MANUAL

Badlands Series
3 Burner Gas Griddle

GAS CERTIFIED SGS C US 802706

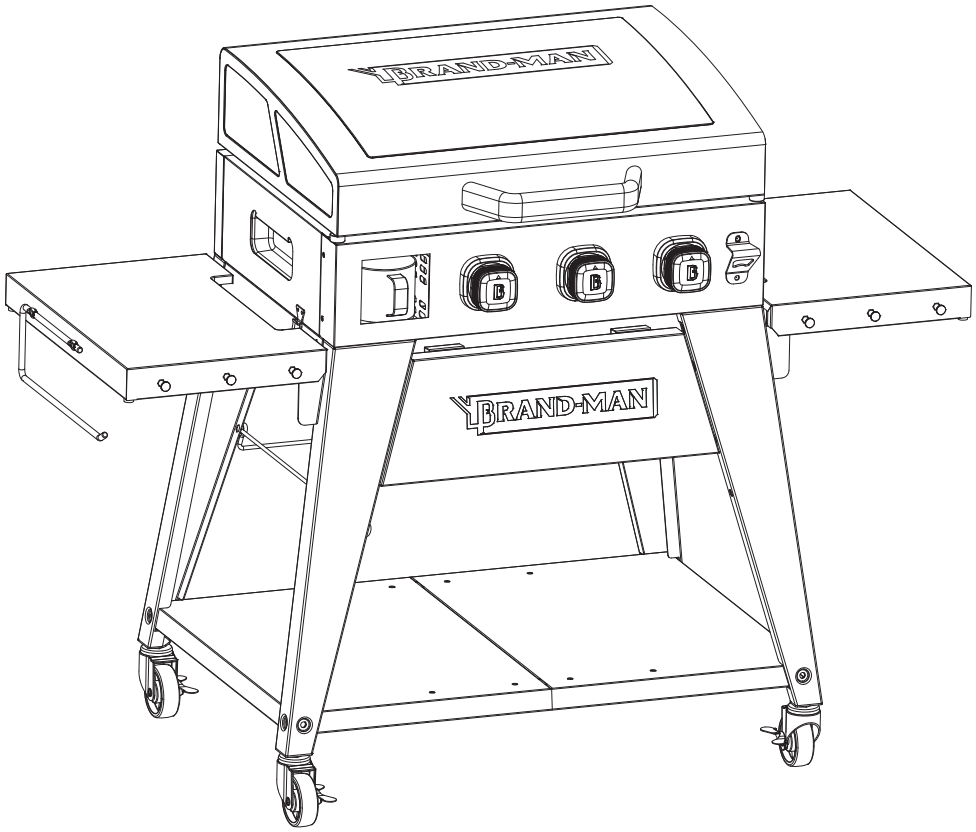

Model: BMBLS-3B
Item: BG2458A3

Important: Keep this Owner's Manual for convenient reference and for part replacement.

Read this Owner's manual carefully and be sure your gas grill is properly assembled, installed and maintained. Failure to follow these instructions could result in serious injury and/or property damage.

Please make sure the cylinder valve connection device shall properly and safely connected with the connection device attached to the inlet of the pressure regulator.

For Outdoor Use Only

Captivate Brands USA, Inc.
25541 Arctic Ocean Drive,
Lake Forest, CA.92630

If you have any questions or problems, you can contact our customer service at 1-855-200-8445 ext 102 or help@supportandspare.com from 9:00 AM - 5:00 PM Monday to Friday. (Pacific). All emails and voice-mail calls will be answered within 24 hours.

SAFETY PRECAUTIONS

READ ALL INSTRUCTIONS BEFORE INSTALLING AND USING THE APPLIANCE
SAVE THESE INSTRUCTIONS

WARNING

1. **Do not store or use gasoline or other flammable liquids or vapors in the vicinity of this or any other appliance.**
2. **An LP gas cylinder not connected for use shall not be stored in the vicinity of this or any other appliance.**

DANGER

If you smell gas:

1. **Shut off gas to the appliance.**
2. **Extinguish any open flame.**
3. **Open hood.**
4. **If odor continues, keep away from the appliance and immediately call your fire department.**

WARNING:

If the outdoor cooking gas appliance is not in use, the gas must be turned off at the supply cylinder(s). Storage of an outdoor cooking gas appliance indoors is permissible only if the cylinder(s) is (are) disconnected and removed from the outdoor cooking gas appliance. Cylinders must be stored outdoors out of the reach of children and must not be stored in a building, garage or any other enclosed area.

WARNING

Combustion by products produced when using this product contain chemicals known to the State of California to cause cancer, birth defects, or other reproductive harm.

WARNING

Failure to comply with these instructions could result in a fire or explosion that could cause serious body injury, death, or property damage.

WARNING

Your grill will get very hot. Never lean over the cooking area while using your grill. Do not touch cooking surfaces, grill housing, hood or any other grill parts while the grill is in operation, or until the gas grill has cooled down after use.
Failure to comply with these instructions may result in serious bodily injury.

WARNING

CALIFORNIA PROPOSITION 65 WARNING:

This product can expose you to chemicals, including carbon monoxide, which are known to the State of California to cause cancer and birth defects or other reproductive harm.
For more information go to: www.P65Warnings.ca.gov

SAFETY PRECAUTIONS

The LP gas cylinder must be constructed and marked in accordance with specifications of the U.S. Dept. of Transportation (DOT). In Canada, the LP gas cylinder must meet the National Standard of Canada, Can CSA–B339, Cylinders, spheres and Tubes for Transportation of Dangerous Goods and Commission .

1. The LP gas cylinder must have a shutoff valve, terminating in an LP gas supply cylinder valve outlet, that is compatible with a Type 1 cylinder connection device. The LP cylinder must also have a safety relief device that has a direct connection with the vapor space of the cylinder.
2. Always keep LP gas cylinder in an upright position. The cylinder supply system must be arranged for vapor withdraw.
3. The LP gas cylinder used must have a collar to protect the cylinder valve.

Proper Placement and Clearance of Grill
Do not use this appliance under overhead combustible surface or covered area (e.g., awnings, umbrellas, porches or gazebos). Always confirm that this barbecue is not positioned under the overhang of a house, a garage or other structure before lighting it. An overhang will serve to deflect flare-ups and radiated heat into the structure itself, which could result in a fire.
Always confirm that this barbecue is positioned more than 30inches away from any combustible materials or surface before lighting it, and that no gasoline or other volatile substances are stored in the vicinity of this barbecue (see diagram below). The temperature of a grease fire or of the radiated heat might be sufficient to ignite nearby combustible or volatile substances.

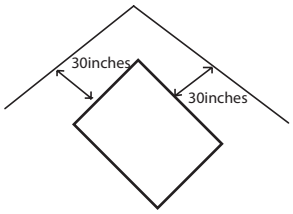

- Do not install this outdoor gas grill in or on recreational vehicles or boats.
- Keep outdoor gas grill area clear and free from combustible materials, gasoline and other flammable vapors and liquids.
- Do not obstruct the flow of combustion and ventilation air. Check for this each time prior to using grill.
- Never connect an unregulated LP gas cylinder to your gas grill. The gas regulator assembly supplied with your gas grill is adjusted to have an outlet pressure of 11" water column (W.C.) for connection to an LP gas cylinder.
- Only use the regulator and the hose assembly supplied with your gas grill. Replacement regulators and hose assemblies must be those specified in this manual.
- Let your LP gas cylinders be filled by reputable propane gas distributors and visually inspected and recertified each time you fill.

1) Do not store a spare LP gas cylinder under or near this appliance;
2) Never fill the cylinder beyond 80 percent full; and
3) If the instructions in (1) and (2) are not followed exactly, a fire causing death or serious injury may occur.

- Always keep the LP cylinder in an upright position.
- Do not allow the liquefied petroleum gas cylinder to overheat.
- Never store liquefied petroleum gas cylinders indoors. If you store the gas grill in a garage or other indoor location, be sure to disconnect the LP cylinder and store it safely outdoors.
- Place dust cap on cylinder valve outlet whenever the cylinder is not in use. Only install the type of dust cap on the cylinder valve outlet that is provided with the cylinder valve. Other types of caps or plugs may result in leakage of propane.
- LP gas cylinders must be stored outdoors in a well-ventilated area and out of reach of children. Disconnected LP gas cylinders must not be stored in a building, garage or any other enclosed area.
- When your gas grill is not in use the gas must be turned off at the LP gas cylinder.
- The pressure regulator and hose assembly must be inspected before each use of the grill. If there is excessive abrasion or wear or if the hose is cut, it must be replaced prior to the grill being used again. Replacement pressure regulators and hose assemblies shall be those specified by the appliance manufacturer.
- Keep the gas regulator hose away from hot grill surfaces and dripping grease. Avoid unnecessary twisting of hose. Visually inspect the hose prior to each use for cuts, cracks, excessive wear or other damage. If the hose appears damaged do not use the gas grill. Call 1-855-200-8445 for assistance.
- Never light your gas grill with the hood closed or before checking to ensure the burner tubes are fully seated over the gas valve orifices.
- Never allow children to operate your grill.
- If the above instructions are not strictly followed, a fire that may result in death or serious injury may occur.

WARNING

A strong gas smell, or the hissing sound of gas indicates a serious problem with your gas grill or the LP gas cylinder. Failure to immediately follow the steps listed below could result in a fire or explosion that could cause serious bodily injury, death, or property damage.

- Shut off gas supply to the gas grill.
- Turn the regulator valve to OFF position.
- Put out any flame with a proper fire extinguisher.
- Open Grill Hood.
- Get away from the LP gas cylinder.
- Do not try to fix the problem yourself.
- If odor continues or you have a fire you can not extinguish, call your fire department. Do not call near the LP gas cylinder because your telephone is a form of electrical device and could create a spark resulting in fire and/or explosion.

NOTE: The normal flow of gas through the regulator and hose assembly can create a humming noise. A low volume of noise is perfectly normal and will not interfere with operation of the grill. If humming noise is loud and excessive you may need to purge air from the gas line or reset the regulator excess gas flow device. This purging procedure should be done every time a new LP gas cylinder is connected to your grill. For help with this procedure refer to page 21, "If Grill Still Fails To Light", or call the Customer Service Helpline 9 AM to 5 PM (Pacific) at: 1-855-200-8445 ext102.

CAUTION: Beware of Flash-Back

CAUTION: Spiders and small insects occasionally spin webs or make nests in the grill burner tubes during transit and warehousing. These webs can lead to gas flow obstruction which could result in a fire in and around burner tubes. This type of fire is known as "FLASH-BACK" and can cause serious damage to your grill and create an unsafe operating condition for the user.

Although an obstructed burner tube is not the only cause of "FLASH-BACK", it is the most common cause.

To reduce the chance of "FLASH-BACK", you must clean the burner tubes before assembling your grill, and at least once a month in late summer or early fall when spiders are most active. Also perform this burner tube cleaning procedure if your grill has not been used for an extended period of time.

See Cleaning Burner Tubes and Ports on page # 24.

Burner Flame Check

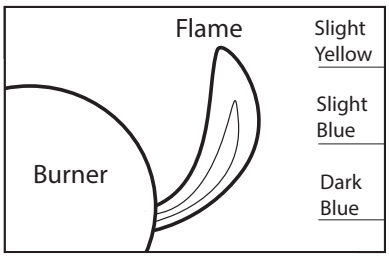

WARNING

Keeping the ventilation opening(s) of the cylinder enclosure free and clear from debris. From the firebox observe the flame burning flame observation aperture steady state.

WARNING

Spiders and insects can nest inside the burners of the grill and disrupt gas flow. This very dangerous condition could cause a fire behind the valve panel, thereby damaging the grill and making it unsafe for operation. Inspect the grill at least twice a year.

TABLE OF CONTENTS

Safety Precautions ----------2-4

Burner Flame Check---------- 4

Model Description---------- 6

Tools Required for Assembly---------- 6

Parts Diagram---------- 7

Parts List----------7-8

Hardware ---------- 8

Assembly Steps ----------9-20

Connecting LP Gas cylinder to LP Grill --------- 21

Operating Instructions ---------- 21-23

Cleaning and Care ---------- 24-26

Warranty ---------- 27

Customer Service---------- 27

Troubleshooting---------- 28-29

3 Burners Griddle Description

3 burners gas griddle barbecue designed with:
3 independently controlled stainless steel burners;
The rated power to be one 10,000 BTU burners and two 9,000 BTU burners with a total of 28,000 BTU;
Push and turn ignition system for firing up;

Tools Required for Assembly

Philips Head Screwdriver (not included)

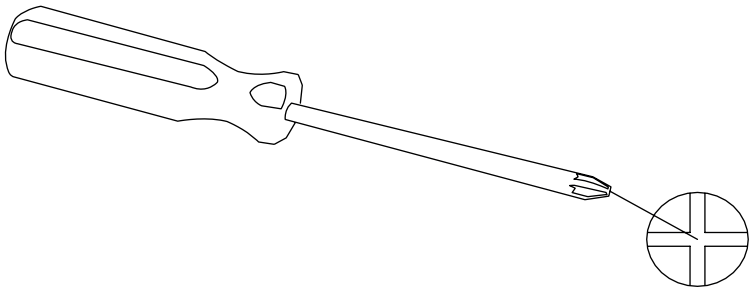

Parts Diagram

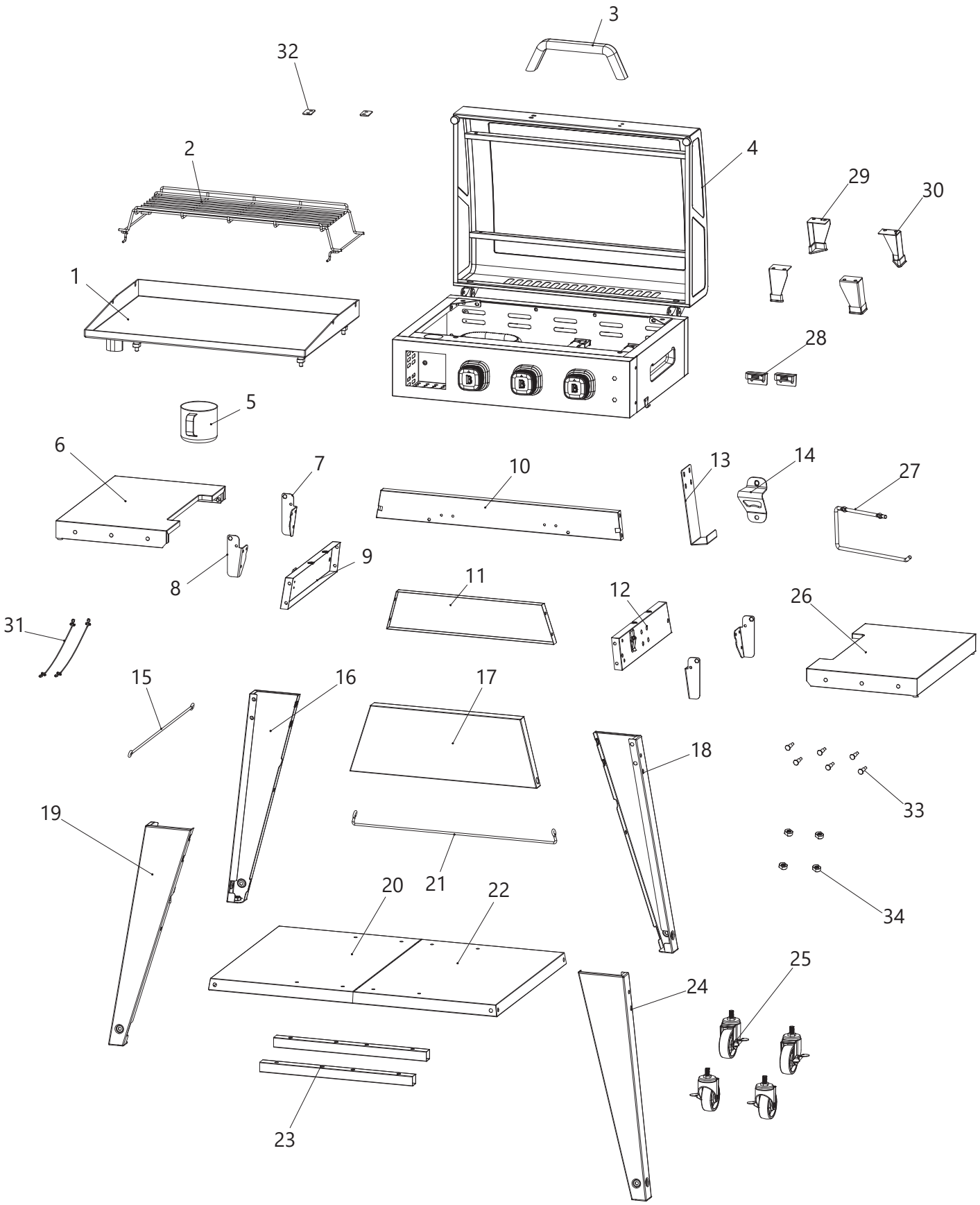

Parts List

Part #	Description	Qty
1	Griddle	1pc
2	Warming Rack	1pc
3	Hood Handle	1pc
4	Firebox Assembly	1pc
5	Grease Cup	1pc
6	Side Shelf - Left	1pc
7	Side Shelf Bracket - LB/RF	2pcs
8	Side Shelf Bracket - LF/RB	2pcs
9	Cart Rail - Left	1pc
10	Cart Fron Panel	1pc
11	Cart Back Panel	1pc
12	Cart Rail - Right	1pc
13	Gas Cylinder Hook	1pc
14	Bottle Opener	1pc
15	Gas Tank Blocker Bar -Left	1pc
16	Left Back Leg	1pc
17	Condiment Shelf	1pc

Part #	Description	Qty
18	Right Back Leg	1pc
19	Left Front Leg	1pc
20	Bottom Plate - Left	1pc
21	Gas Tank Blocker Bar - Back	1pc
22	Bottom Plate - Right	1pc
23	Connecting Tube	2pcs
24	Right Front Leg	1pc
25	Castor	4pcs
26	Side Shelf - Right	1pc
27	Paper Towel Holder	1pc
28	Magnet Assembly	2pcs
29	Firebox Support Leg 1	2pcs
30	Firebox Support Leg 2	2pcs
31	Wire Stay for condiment	2pcs
32	Heat Separator	2pcs
33	Hook	6pcs
34	Nuts	4pcs

Hardware List

Part#	Picture	Qty	Specification
A		7	Bolts (M6X20)
B		65	Bolts (M6X15)
C		2	Shoulder Bolt (M6X30)
D		8	Bolts (M4X12)
E		4	Shoulder Bolt (M6X18)
F		12	Flat Washer (Ø6.2)
G		12	Spring Washer (Ø6.2)
H	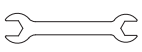	1	Spanner

Assembly Steps

Step 1

- Attach Bottom Plate - Left (20) and Bottom Plate - Right (22) together with five screws (B) as shown.
- Install two Connecting Tube (23) with four screws (B) each to the Bottom Plate prepared as in the diagram below.

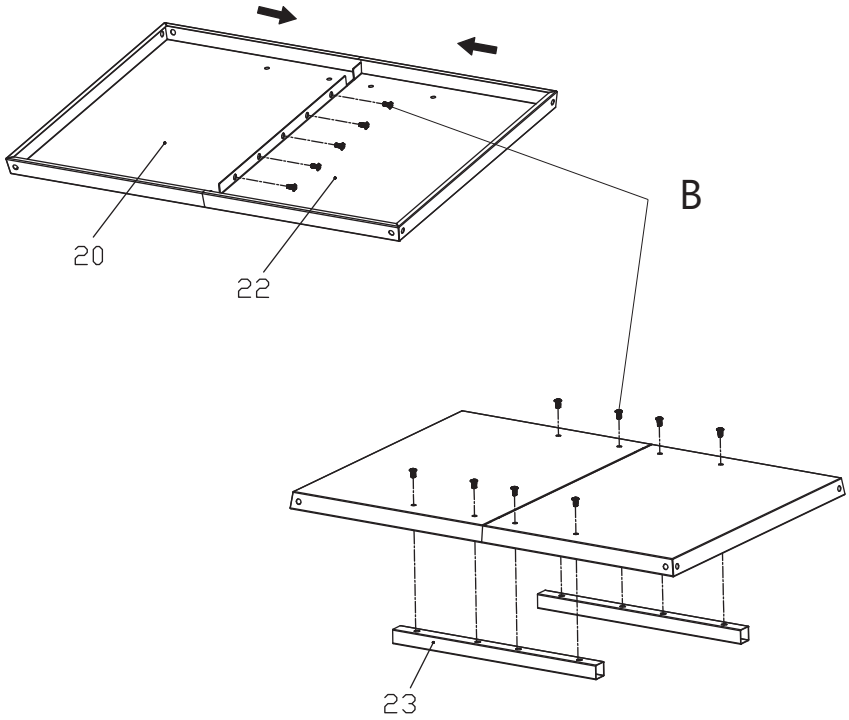

B 13PCS

Step 2

- Install Left Back Leg (16), Right Back Leg (18), Left Front Leg (19) and Right Front Leg (24) onto each of the corner of the bottom plate prepared with two screws (B), two lock nuts (G) and two flat washers (F) on each leg as shown below accordingly.
- Ensure all screws are tightened.

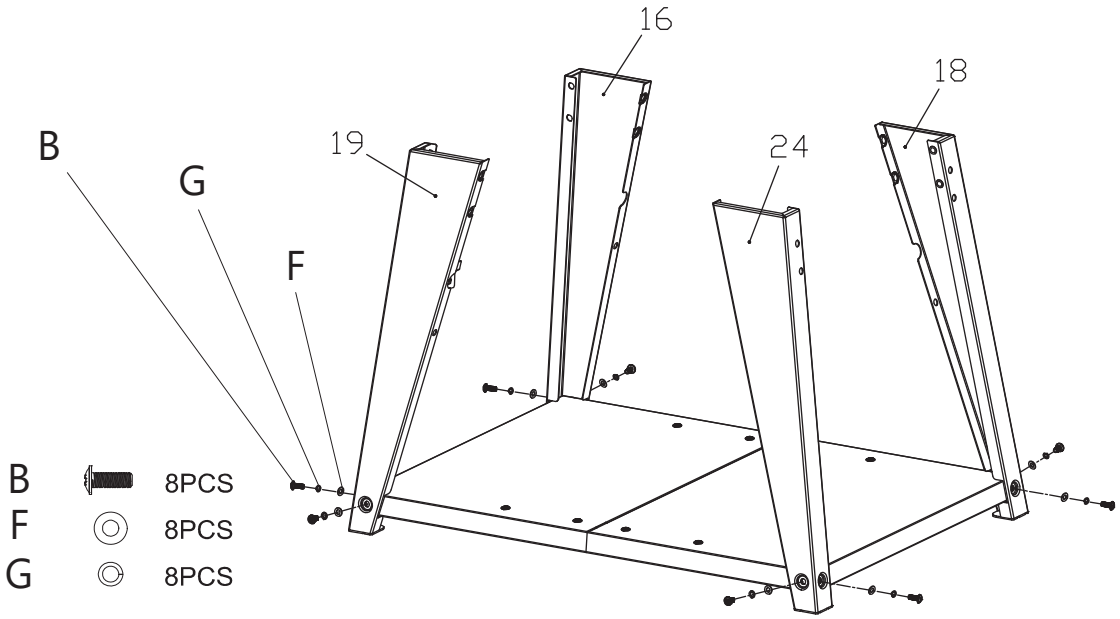

B 8PCS
F 8PCS
G 8PCS

Assembly Steps

Step 3

- Install the Cart Back Panel (11) onto the cart prepared in Step 2 and secure it with four screws (B).
- Make sure all screws are tighten properly.

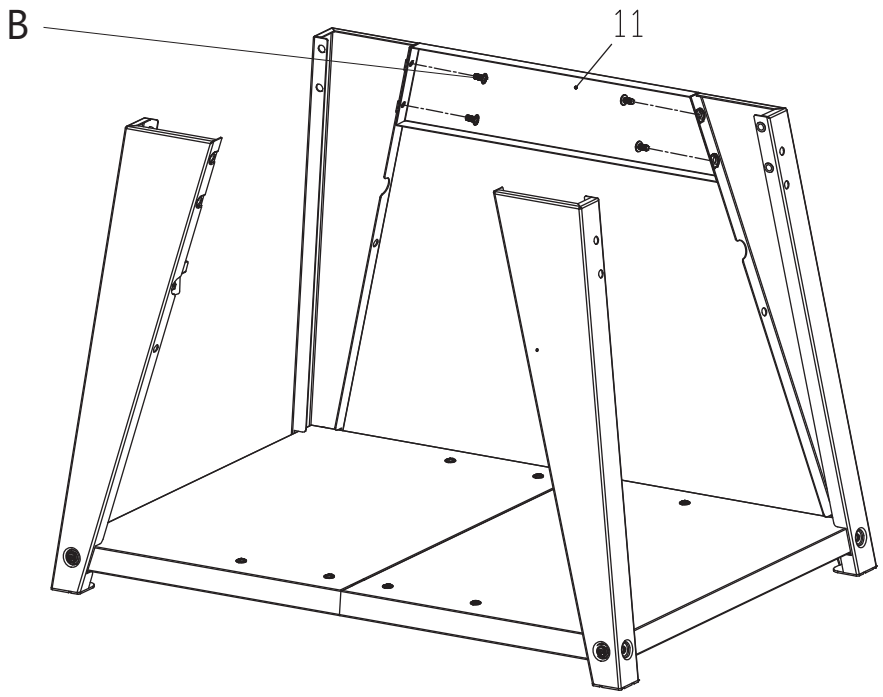

B 4PCS

Step 4

- Install Cart Rail - Left (9) with four screws (B) onto the cart prepared.
- Ensure all screws are tightened.

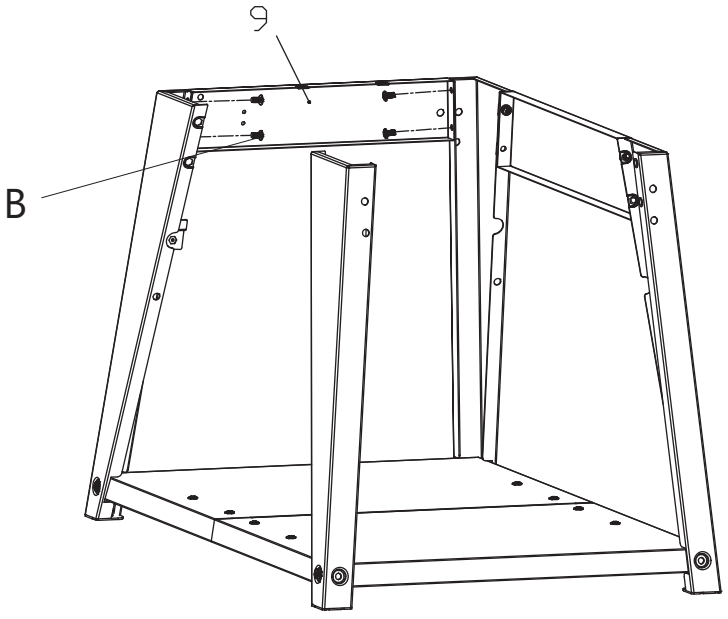

B 4PCS

Assembly Steps

Step 5

- Install Cart Rail - Right (12) with four screws (B) onto the cart prepared.
- Ensure all screws are tightened.

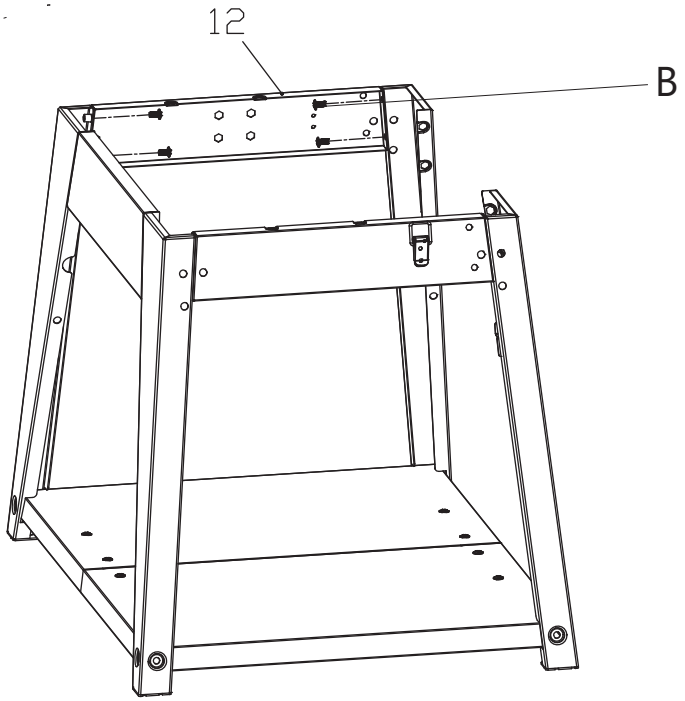

B  4PCS

Step 6

- Install Cart Front Panel (10) with four screws (B) onto the cart prepared.
- Attach two Magnet Assembly (28) onto the Cart front Panel with two screws (D) each as shown below.
- Ensure all screws are tightened.

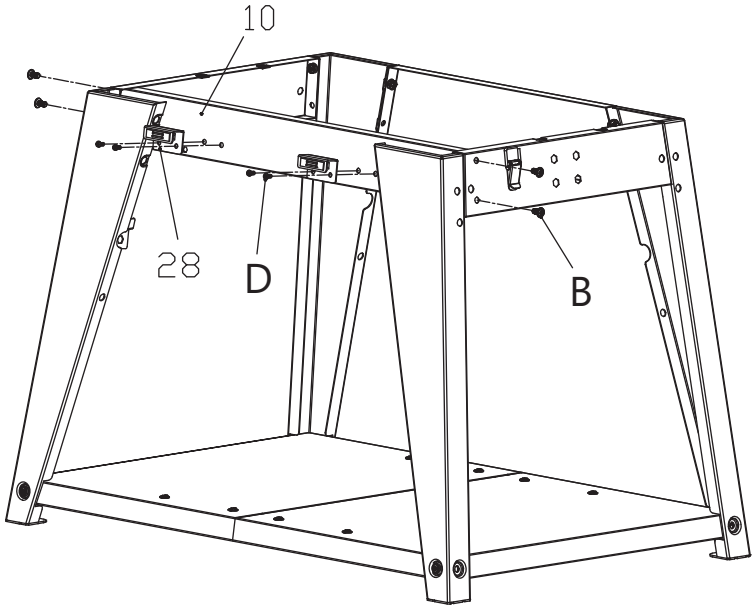

D  4PCS

B  4PCS

Assembly Steps

Step 7

- Turn the prepared cart upside down.
- Install the four Castors (25) on as shown in the diagram below and tighten it with the spanner provided.

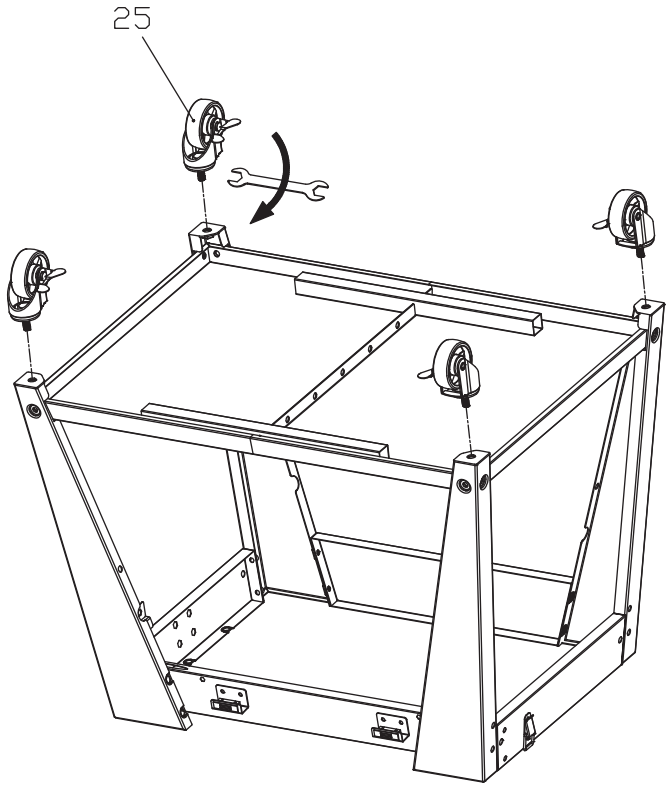

Step 8

- Install the Condiment Shelf (17) onto the front of the cart with two screws (C) as shown.

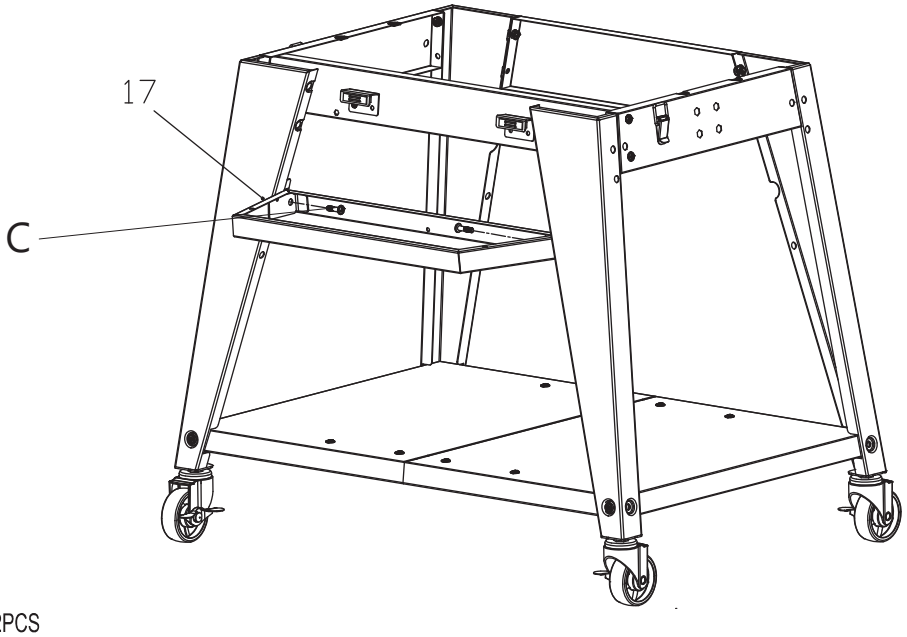

C 2PCS

Assembly Steps

Step 9

- Attach the Wire for Condiment Shelf (31) onto the cart front and condiment shelft with four screws (D).
- Ensure the screws are tightened.

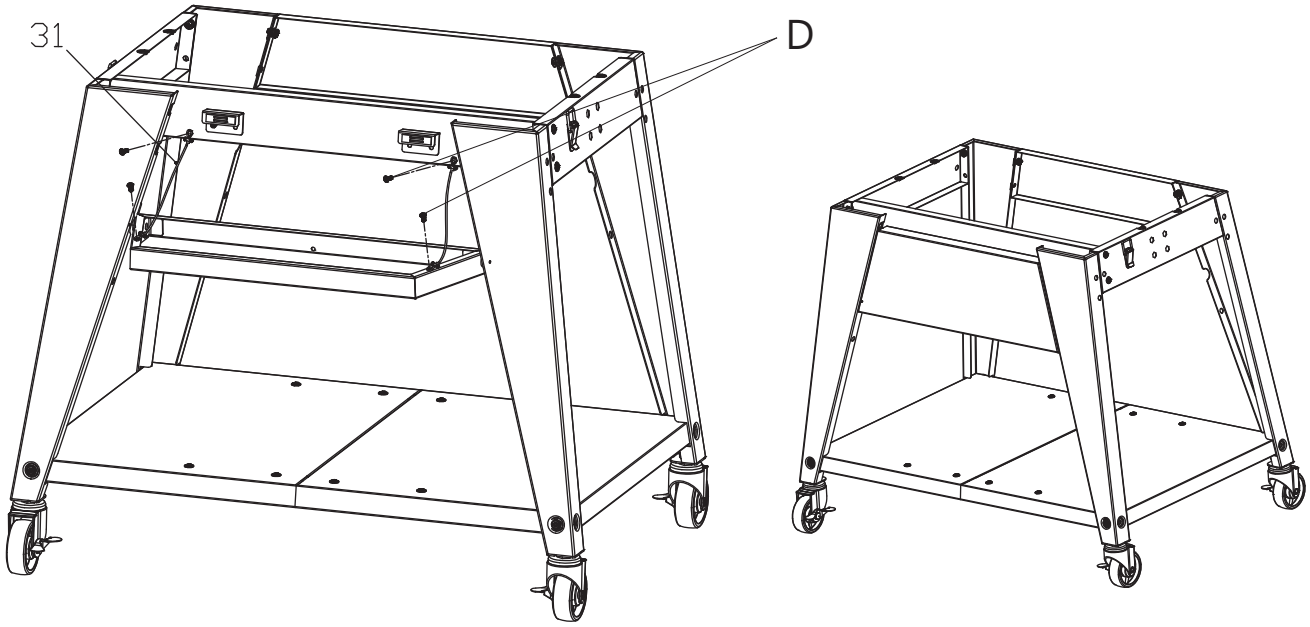

D 4PCS

Step 10

- Attach on the Gas Cylinder Hook (13) onto the right side of the cart with four screws (B) and secure them properly.

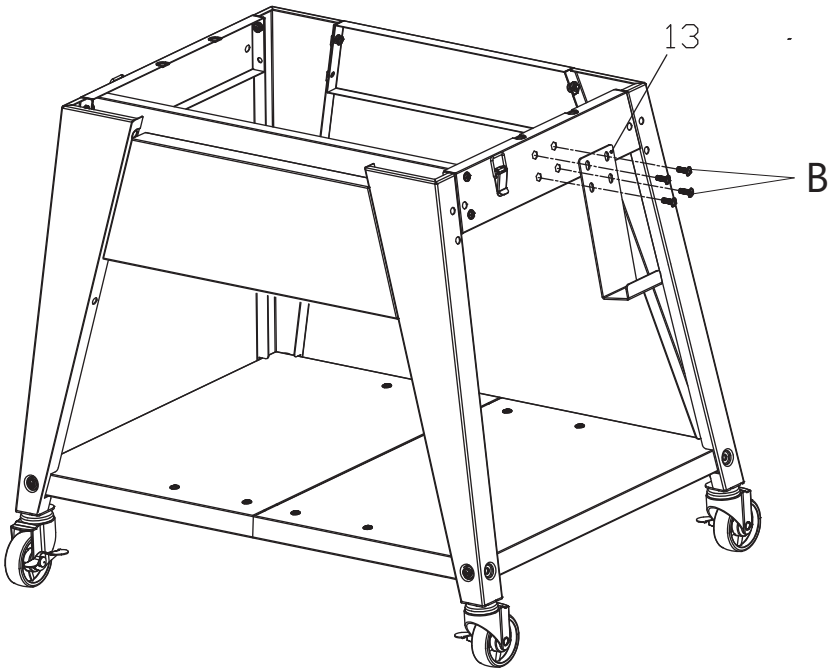

B 4PCS

Assembly Steps

Step 11

- Install Side Shelf Bracket (7 and 8) with three screws (B) each on the left side of the cart as shown accordingly.
- Ensure all screws are tightened.

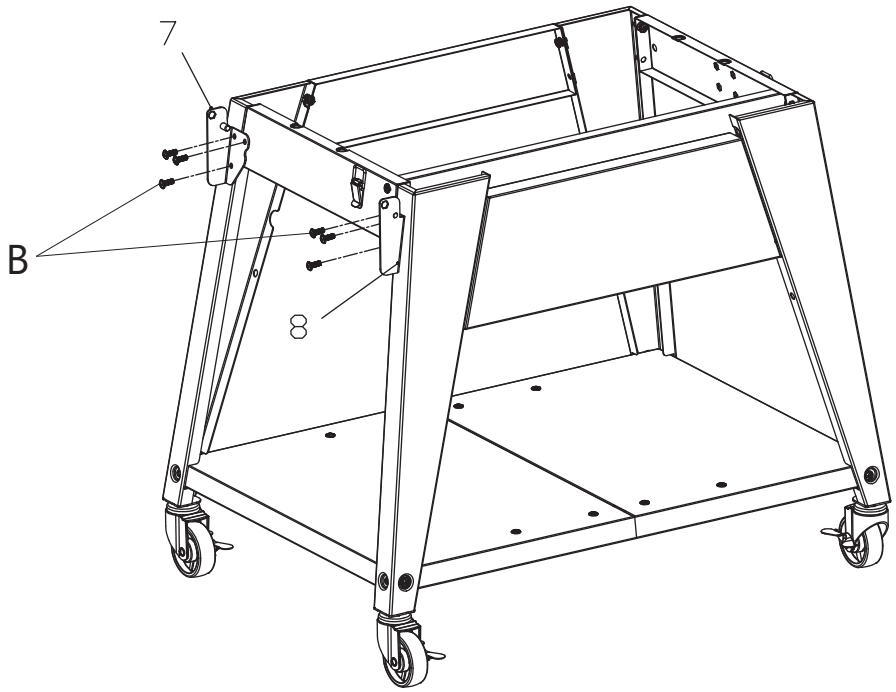

B 6PCS

Step 12

- Attach the Side Shelf - Left (6) onto the left side of the cart and secure with two screws (E) as shown in the diagram below.

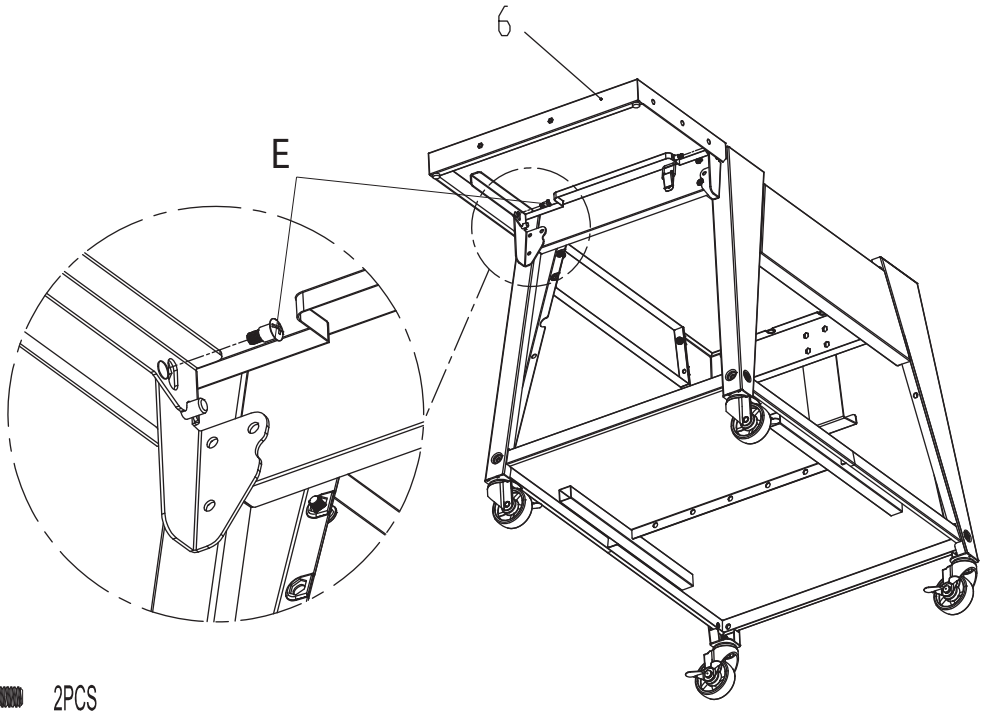

E 2PCS

Assembly Steps

Step 13

- Install the Paper Towel Holder (27) onto the side of the Side Shelf - Left and secure with two screws (B).
- Attach the Hook (33) onto the front of Side Shelf - Left as shown below.

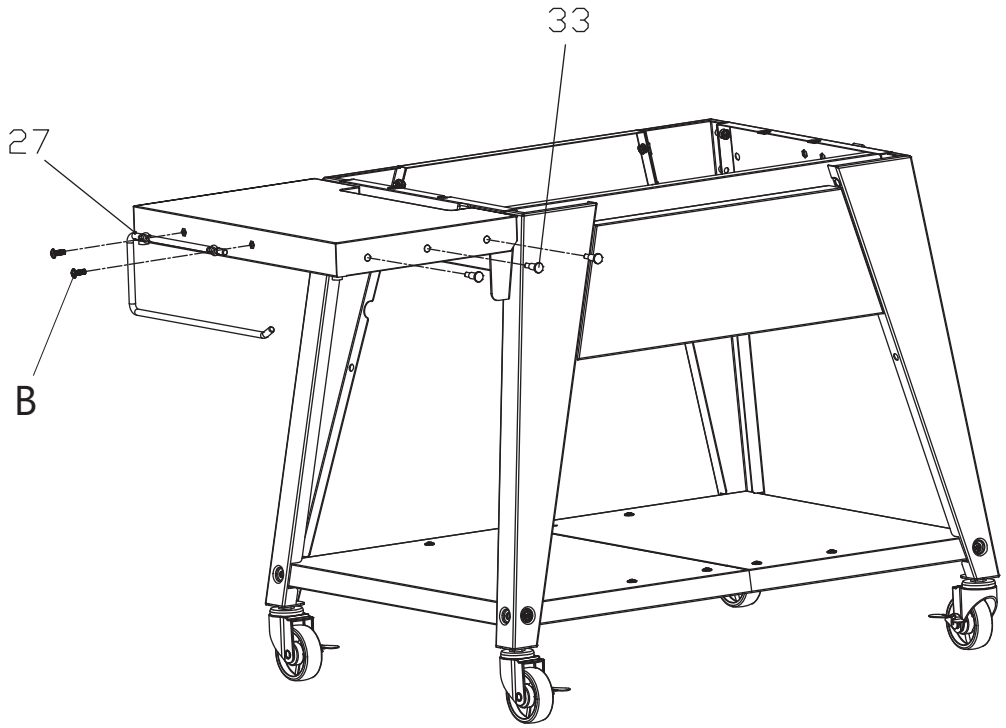

B  2PCS

Step 14

- Install Side Shelf Bracket (7 and 8) with three screws (B) each on the right side of the cart as shown accordingly.
- Ensure all screws are tightened.

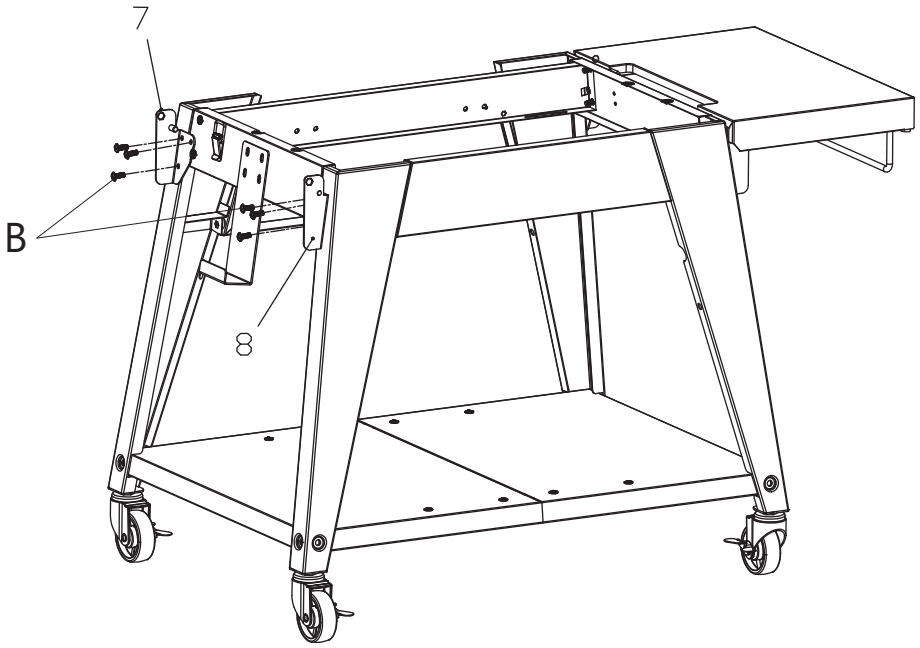

B  6PCS

Assembly Steps

Step 15

- Attach the Side Shelf - Right (26) onto the left side of the cart and secure with two screws (E) as shown in the diagram below.
- Attach three Hooks (33) on the front of Side Shelf - Right (26).

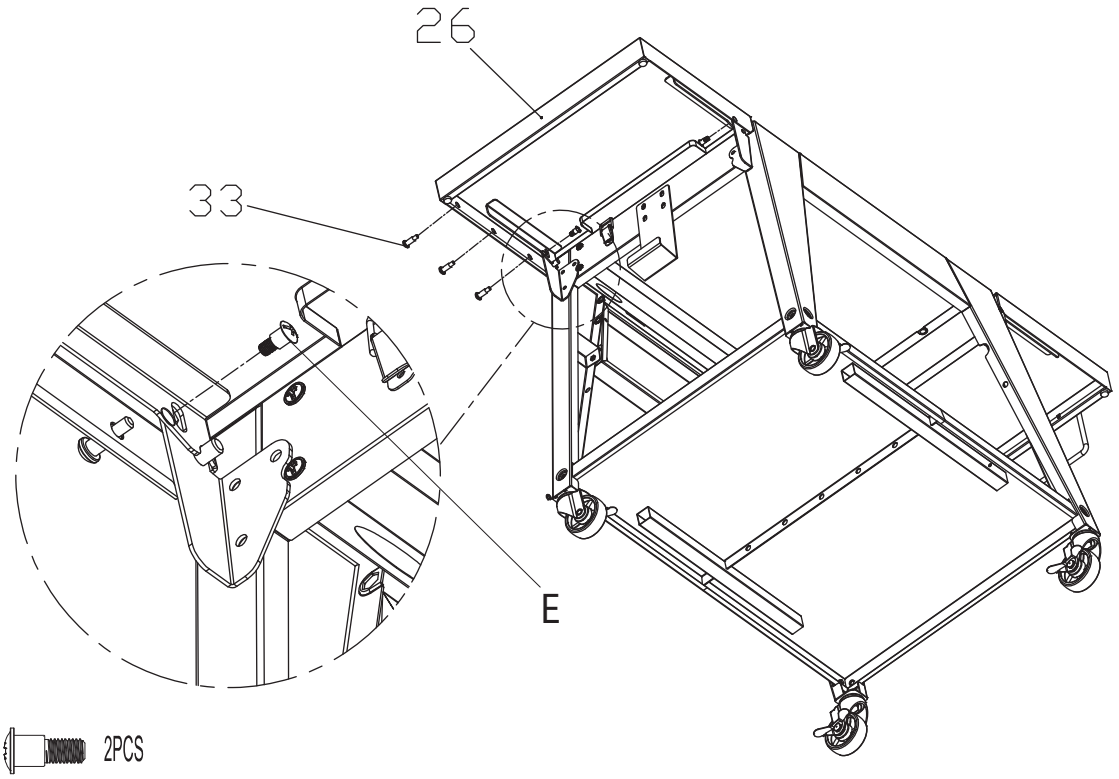

E 2PCS

Step 16

- Install two Firebox Support Leg 1 (29) and two Firebox Support Leg 2 (30) onto the Firebox Assembly (4) with two screws (B) each leg.
- Ensure all screws are tightened.

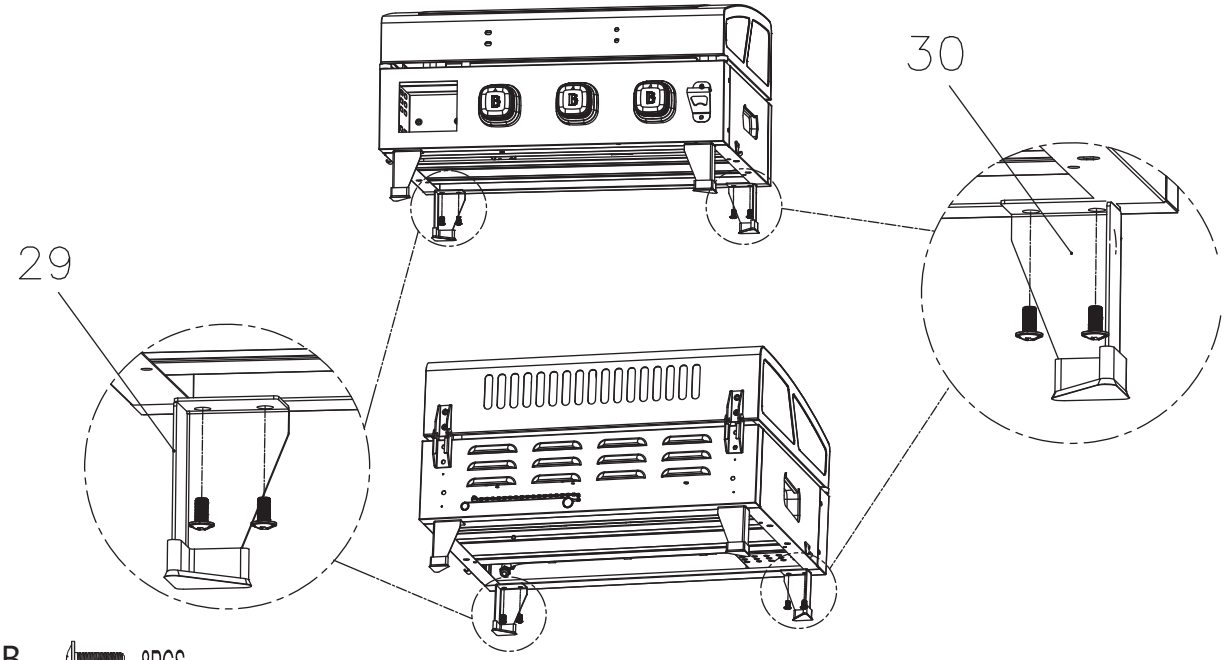

B 8PCS

Assembly Steps

Step 17

- Put on the Firebox Assembly (4) onto the cart prepared in Step 15.
- Secure the Firebox Assembly to the cart with the lock at the side as shown below.

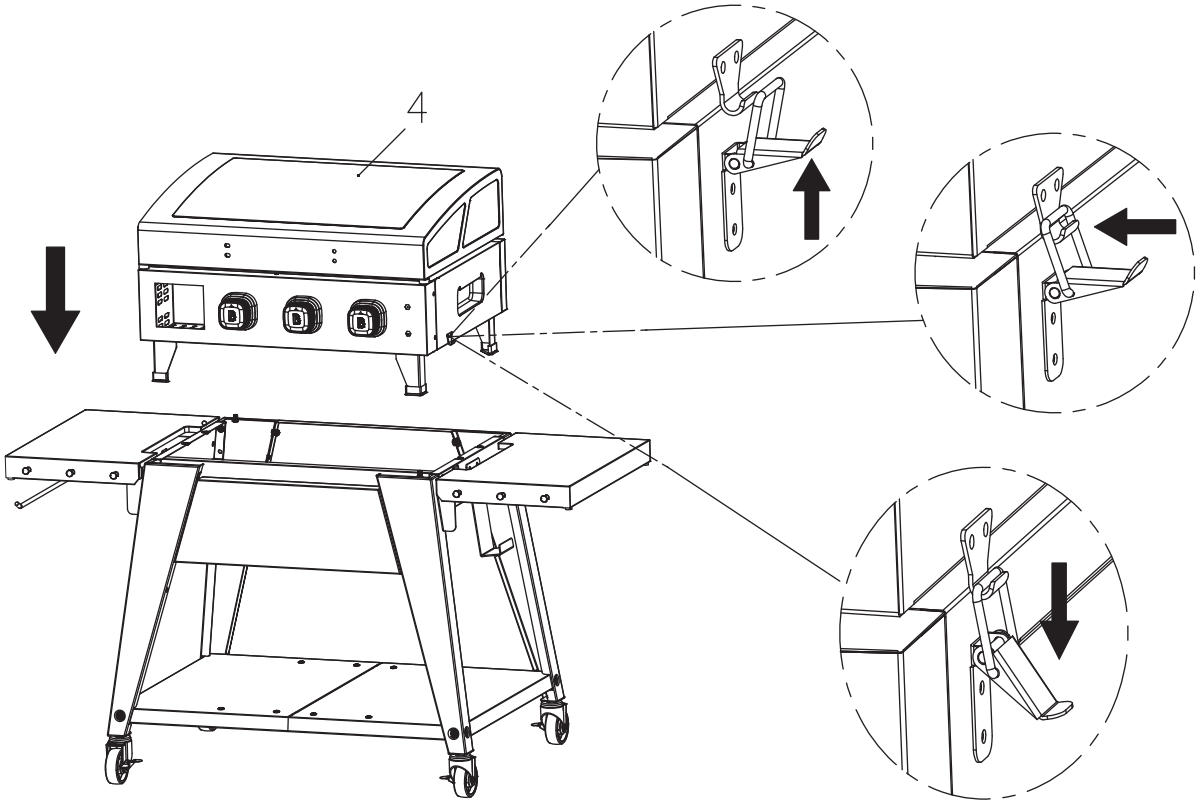

Step 18

- Install the Hood Handle (3) onto the hood with two heat pads (32), four screws (A), four flat washers (F) and four lock nut (G).

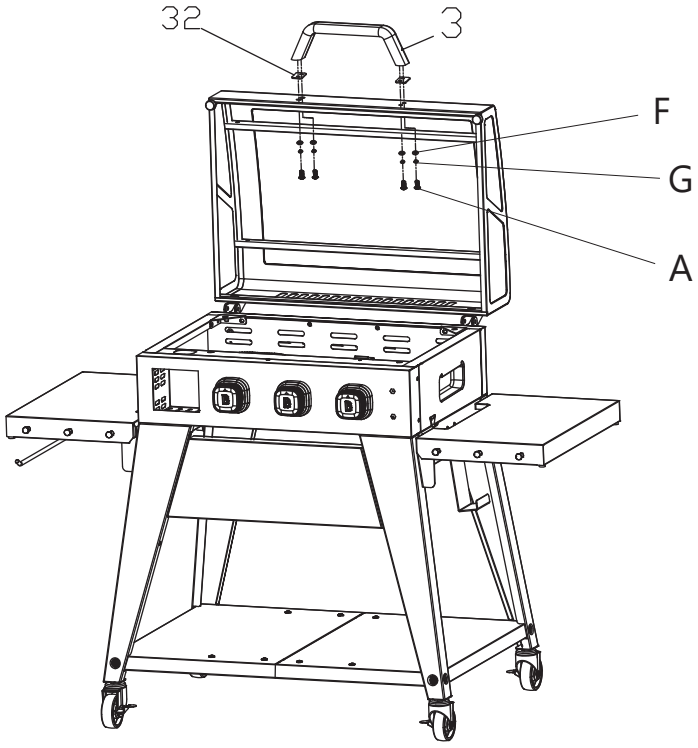

A  4PCS

F  4PCS

G  4PCS

Assembly Steps

Step 19

• Install the Bottle Opener (14) on the right side of the firebox front panel and secure it with two screws (B).

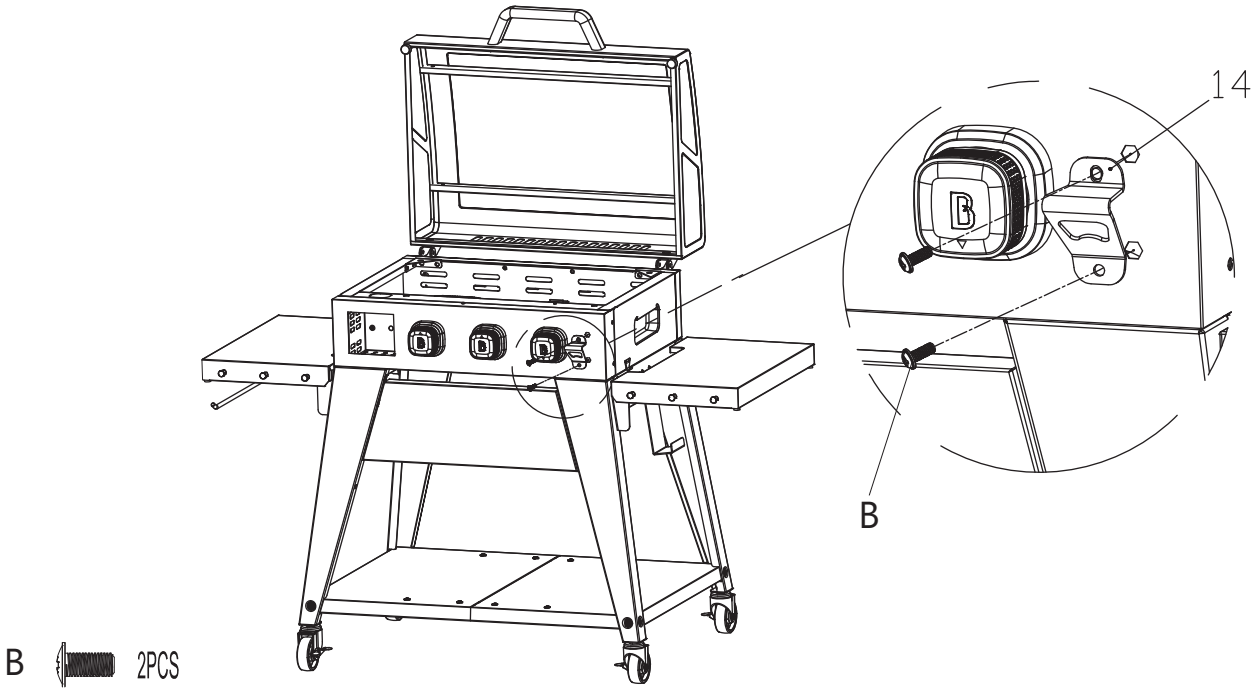

Step 20

• Screw on Nut (34) onto each feet of the griddle as shown below.

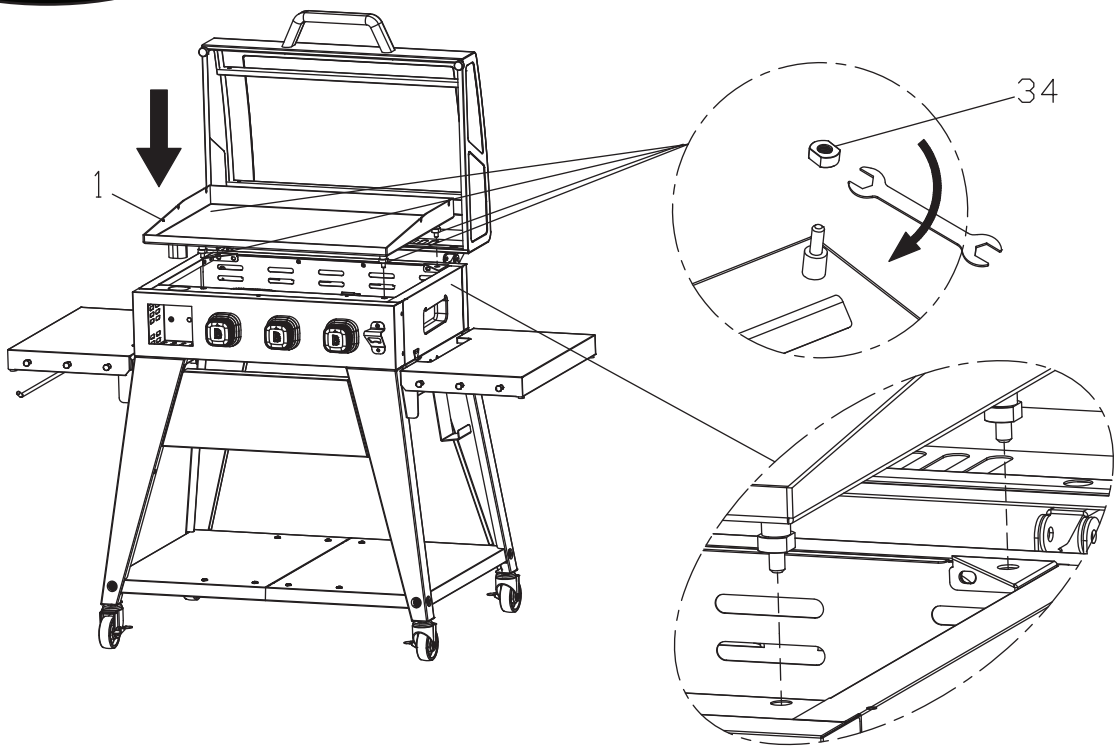

Assembly Steps

Step 21

• Put on the Warming Rack (2) onto the back of the Griddle as shown below.

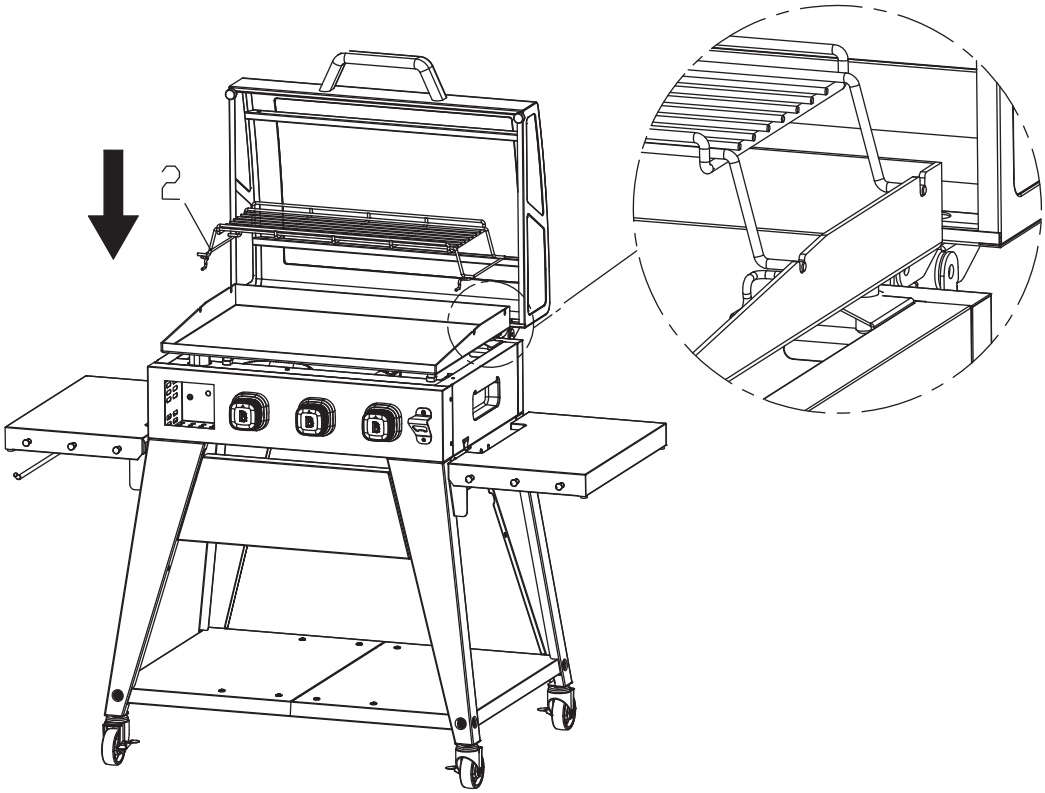

Step 22

• Insert the Grease Cup (5) into grease cup holder at the left side of the firebox fascia as shown.

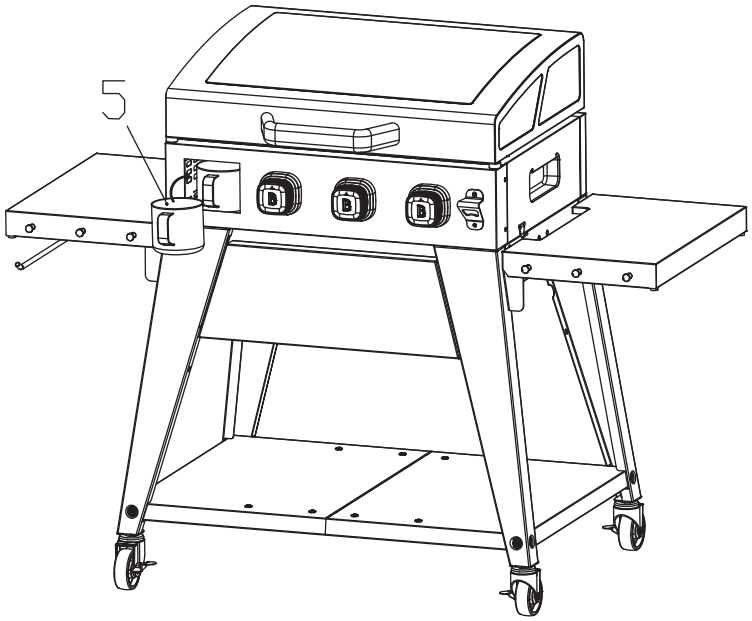

Assembly Steps

Step 23

• Install the Gas Tank Blocker - Left (15) and Gas Tank Bloacker - Back (21) on the left side and back of the cart with three screws (A) as shown in diagram below.

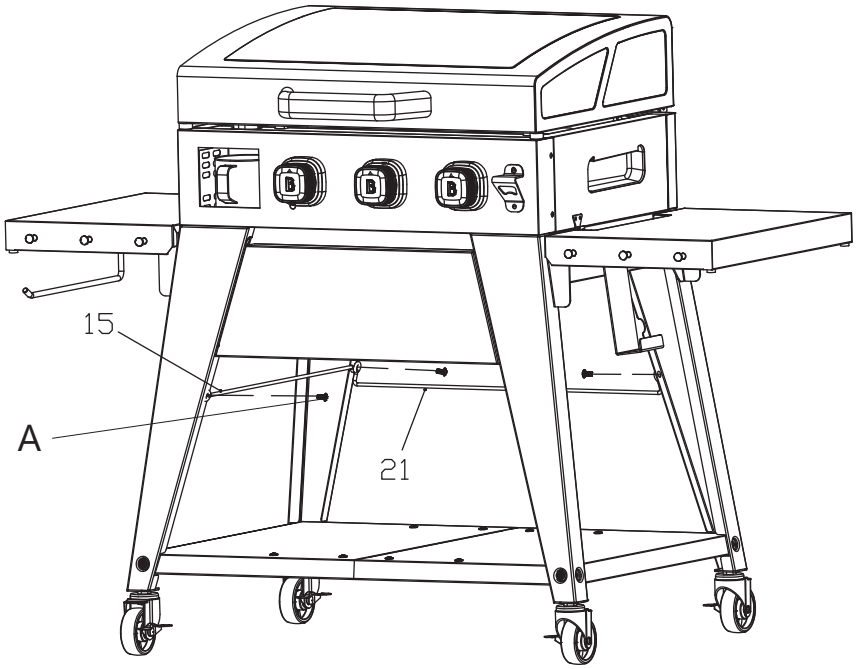

A  3PCS

Step 24

• Put on the gas cylinder onto the cylinder hook as shown.

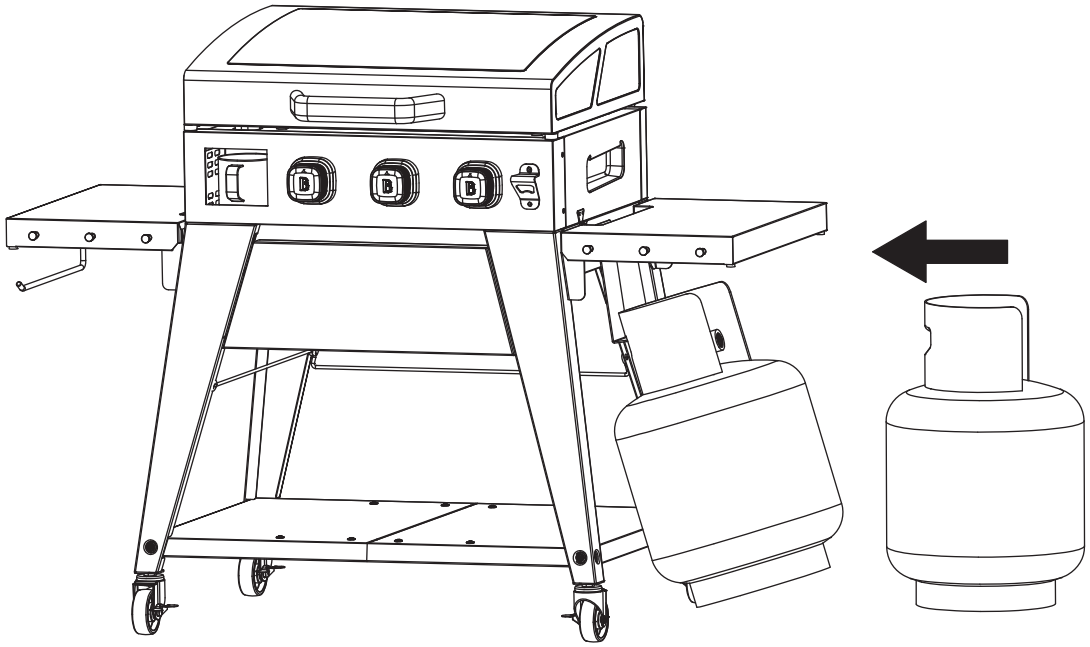

USING, CONNECTING & DISCONNECTING LP GAS TANK

The installation must conform with local codes or, in the absence of local codes, with either the National Fuel Gas Code, ANSI Z223.1/NFPA 54, or the Natural Gas and Propane Installation Code CSA B149.1, or Propane Storage and Handling Code, CSA B149.2, or the Standard for Recreational Vehicles, ANSI A119.2/NFPA 1192, and CSA 2240 RV Series, Recreational Vehicle Code as applicable.

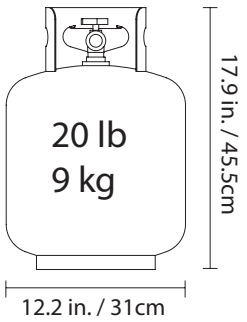

⚠ Use standard flexible tube with length less than 1.5m tube shall be readily visible across its entire length for inspection after installation.

To operate, you will need on precisio-filled standard barbecue grill LP gas tank with external valve threads.

⚠ **CAUTION: LP gas tank must be properly disconnected and removed prior to moving this appliance**

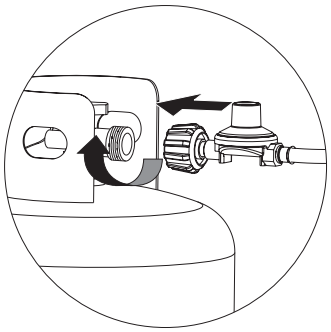

Connecting LP Gas Tank

1. Before connecting, be sure there is no debris caught in the head of the LP gas tank, head of the regulator valve or in the head of the burner or burner ports.
2. Connect regulator/hose assembly to tank by turning knob clockwise until it stops. The cylinder supply system must be arranged for vapor withdrawal.

Disconnecting LP Gas Tank

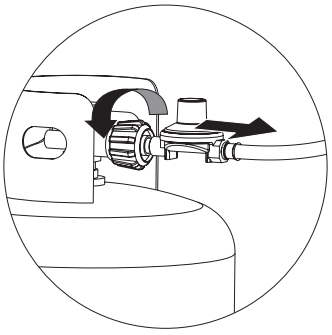

1. Before disconnecting, make sure the LP gas tank valve is "CLOSED."

2. Disconnect regulator/hose assembly from LP gas tank by turning knob counterclockwise until it is loose.

⚠ **CAUTION: LP gas tank must be properly disconnected and removed prior to moving this appliance.**

3. Place the protective cap cover on the LP tank and store the tank outdoors in a well ventilated area out of direct sunlight.

OPERATING INSTRUCTIONS

The Minimum ambient operating temperature:-4°F (-20°C)

⚠ **DANGER**

To prevent fire or explosion hazard when testing for a leak:

1. Always perform the leak test on page 19 before lighting the barbecue and each time the cylinder is connected for use.
2. Do not smoke or allow other sources of ignition in the area while conduting a leak test.
3. Conduct the leak test outdoors in a well- ventilatied area.
4. Do not use matches, lighters or a flame to check for leaks.
5. Do not use barbecue until all leaks have been stopped. If you are unable to stop a leak, disconnect the propane supply, call for gas appliance service or your local propane gas supplier.

OPERATING INSTRUCTIONS (CONTINUE)

Checking for leaks

1. Make two to three oz. of leak solution by mixing one part liquid dishwashing soap with three parts water.
2. Make sure control knobs are in the "OFF" position.
3. Spray some solution on the tank valve up to the regulator connection.
4. Inspect the solution at the connections for bubbles. If no bubbles appear, the connection is secure.
5. If bubbles appear, you have a leak. Go to step 6.
6. Disconnect the regulator from the tank and reconnect. Make sure the connection is secured.
7. Retest with solution.
8. If you continue to se bubbles, replace the cylinder.

Lighting Your Barbecue

⚠ **DANGER: Failure to open lid while igniting the barbecue's burners or not waiting five minutes to allow gas to clear if the barbecue does not light, may result in an explosion, which could cause serious bodily injury or death.**

⚠ **WARNING: To prevent possible bodily injury, never stand with your head directly over the barbecue when preparing to light the main burners.**

Tank/Gas Line Connection

1. Make 2-3 oz. of leak detection solution by mixing one part liquid dishwashing soap with three parts water.
2. Make sure control knobs are in the " OFF" position (Figure B).
3. Connect LP gas tank per "Installing LP Gas Tank" section.
4. Turn LP gas tank valve to "OPEN."
5. Spoon several drops of solution, or use a squirt bottle, at all "X" locations (Figures A and C).

a. If any bubbles appear, turn LP gas tank valve to "CLOSED," reconnect and re-test.

b. If you continue to see bubbles after several attempts, turn LP gas tank valve to "CLOSED" and disconnect LP gas tank, per "Disconnecting LP Gas Tank" section. Contact Captivate Brands USA Inc. for assistance.

c. If no bubbles appear after one minute, turn LP gas tank valve to "CLOSED," wipe away solution and proceed.

Figure A

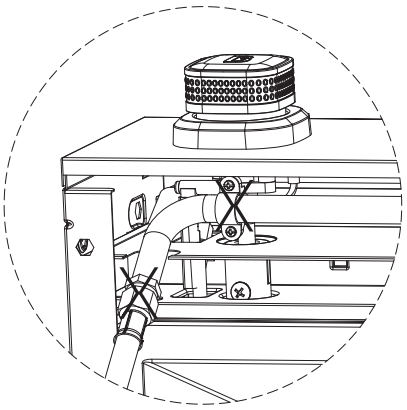

Figure B

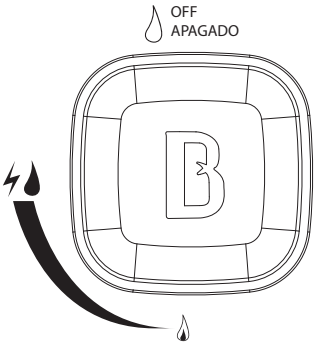

Operating Main Burners

First Use

1. Make sure all labels, packaging and protective films have been removed from the Barbecue.
2. Light Barbecue per "Lighting" section.
3. Remove manufacturing oils before cooking on this Barbecue for the first time.
4. Season your Barbecue cooking surface per "Seasoning Barbecue" section.

Figure C

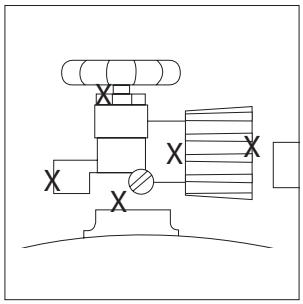

Lighting

⚠ **CAUTION: Keep outdoor gas cooking appliance area clear and free from combustible materials, gasoline and other flammable vapors and liquids.**

OPERATING INSTRUCTIONS (CONTINUE)

⚠ CAUTION: DO NOT obstruct the flow of combustion and ventilation air.

1. Check for obstructions of airflow to the burners. Spiders, insects and webs can clog the burner/venturi tube. A clogged burner tube can lead to a fire.

⚠ CAUTION: Do NOT use non-stick cooking sprays because they contain a lot of water and can burn onto the barbecue, damaging the surface.

⚠ CAUTION: Do NOT use corn oil as it contains a high level of sugar, which can carmelize and burn onto the surface.

Figure D

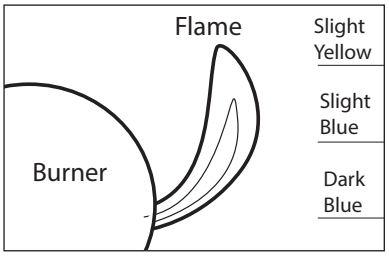

2. All control knobs must be in the " OFF" position (Figure B).
3. Connect LP gas tank per "Installing LP Gas Tank" section.
4. Turn LP gas tank valve to "OPEN."
5. Push and turn any control knob to (HIGH). The burner should light. If it does not, repeat up to three times.
6. If ignition does not occur in 5 seconds, turn burner control knob "OFF," wait 5 minutes, and repeat lighting procedure.
7. If igniter does not light burner, use a lit match secured with the Lighting Hook (included with the Barbecue) to light burners. Access the burners from under the Barbecue. Position lit match near side of burner.

Important: Always use the Lighting Hook (included) when lighting burners with a match.

8. After lighting, observe the burner flame. Make sure all burner ports are lit and flame height matches illustration (Figure D).

Note: Each burner lights independently - repeat steps 5-8 for the other burners.

Controlling Flare-ups

CAUTION:

1. **If a grease fire develops, turn control knobs to the "OFF" position and LP gas tank valve to "CLOSED". DO NOT use water on a grease fire. This can cause the grease to splatter and could result in serious burns, bodily harm or other damage.**
2. **DO NOT leave barbecue unattended while preheating or burning off food residue on or (HIGH). If barbecue has not been cleaned, a grease fire can occur.**

WARNING: When cooking, fire extinguishing materials should be readily accessible. In the event of an oil/grease fire, use type BC dry chemical fire extinguisher or smother with dirt, sand or baking soda. Do NOT attempt to extinguish with water.

Flare-ups are a apart of cooking meats on a barbecue and add to the unique flavor of grilling.

Excessive flare-ups can over cook your food and be dangerous.

Important: Excessive flare-ups result from the build-up of grease in the grease cup.
If a grease fire occurs, turn the control knob(s) to "OFF" until the grease burn out.
If excessive flare-ups occur, DO NOT pour water onto the flames.

Minimize Flare-ups

1. Trim excess fat from meats prior to cooking.
2. Cook high fat content meats on (LOW) setting or indirectly.
3. Ensure that your Barbecue is on a hard, level, non-combustible surface and the grease is allowed to drain into grease receptacle.

CLEANING AND CARE

⚠ CAUTION:

1. All cleaning and maintenance should be done when Barbecue is cool and with the fuel supply disconnected.
2. DO NOT clean any barbecue part in self-cleaning oven. The extreme heat will damage the finish.
3. DO NOT enlarge valve orifices or burner ports when cleaning the valves or burners.

Notices

1. This Barbecue should be thoroughly cleaned and inspected on a regular basis.
2. Abrasive cleaners will damage this product.
3. Never use oven cleaner to clean any part of Barbecue.

Before Each Use

1. Keep the barbecue area clean and free from any combustible materials, gasoline, and other flammable vapors and liquids.
2. DO NOT obstruct the flow of the combustion of LP gas and the ventilation of air.
3. Keep the ventilation opening(s) of the LP gas tank area free and clear from debris.
4. Visually check the burner flames to make sure your barbecue is working properly (Figure E).
5. See sections below for proper cleaning and seasoning instructions.
6. Check for obstruction of airflow to the burners. Spiders, insects and webs can clog the burner/venturi tube. A clogged burner tube can lead to a fire.

Cleaning Surfaces

1. Wipe surfaces clean with mild dish washing detergent or baking soda mixed with water.
2. For stubborn surfaces, use a citrus-based degreaser and a nylon scrubbing brush.
3. Rinse clean with water.
4. Allow to air dry.

Cleaning Main Burners

1. Turn the regulator valve to to "LOCK OFF" position.
2. Turn valve clockwise to the "OFF" position.

Note: A "poof" sound is normal as the last of the gas is burned.

3. Disconnect LP gas tank per "Disconnecting LP Gas Tank" section.
4. Remove cooking grid.
5. Remove burners by removing the fasteners, which secure the burners to the barbecue.
6. Unscrew the regulator from the burner and lift burners up.
7. Disconnect wire from spark electrode.

Figure E

Burner Flame Conditions
Use this chart to see if your burners need to be cleaned

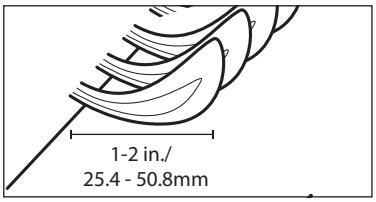

Normal: Soft blue flames with yellow tips between 1 in- 2 in. height.

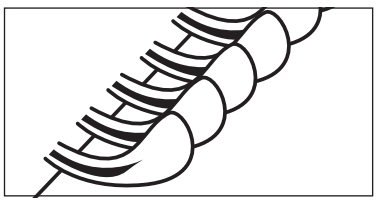

Needs cleaning: Noisy with hard blue flames.

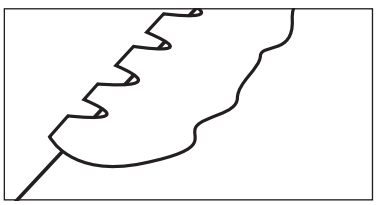

Has to be replaced: Wavy with yellow flames.

CLEANING AND CARE

8. Clean venturi of each burner with small bottle brush or compressed air.
9. Remove all residue and dirt from burner surface.
10. Clean any clogged ports with a stiff wire (such as an opened paper clip).
11. Inspect burners for any damage (cracks or holes). If damage is found, replace with new burner(s) from manufacturer.
12. Re-install burner(s). Checking to insure that regulator is correctly screw in. Also, check position of spark electrode.
13. Connect wire to spark electrode.
14. Replace cooking grid.
15. Connect LP gas tank per "Installing LP Gas Tank" section.
16. Perform leak test per "Checking for Leaks" section.

Before Storing

1. Turn regulator valve to " LOCK OFF" position.
2. Turn valve clockwise to the "OFF" position.

   Note: A "poof" sound is normal as the last of the gas is burned.
3. Disconnect LP gas tank per "Disconnecting LP Gas Tank" section.
4. Clean all surfaces.
5. Lightly coat the burner(s) with cooking oil to prevent excess rusting.
6. Season your Barbecue cooking surface per "Seasoning Barbecue" section.
7. If storing the Barbecue indoors, disconnect the LP tank per "Disconnecting LP Gas Tank" section.
8. Place the protective cap cover on the LP tank and store the tank outdoors in a well ventilated area out of direct sunlight.
9. If storing the Barbecue indoors, cover the Barbecue and store in a cool dry place.
10. If storing the Barbecue outdoors, cover the Barbecue with a Barbecue cover for protection from the weather.

Seasoning Barbecue

Instructions: season your griddle cooking surface every time you use it.

Remove all food debris with spatula or scraper. Apply a very thin, even coating of oil (flax oil, extra virgin olive oil, vegetable oil, peanut oil, etc.) to the griddle surface.

Use a paper towel to spread the oil evenly across the cooking surface of the griddle. Turn on the burners under the griddle to medium high. You will start to see the oil smoke and the griddle top will discolor. This is good. Keep heating griddle until the smoke stops (10 minutes). Turn the burners off and allow the griddle cool down. Repeat this 3-4 times as needed. Store in a cool, dry place with the hood closed.

⚠ CAUTION: DO NOTput forzen food striaght onto the griddle.
⚠ CAUTION: DO NOT use corn oil as it contains a high level of sugar, which can carmelize and burn onto the surface.

CLEANING AND CARE

First Use

Before cooking on your gas grill and griddle combo for the first time, you will want to "burn off" the grill to eliminate any odor or foreign matter. Just ignite the burners, lower the hoods, and operate grill on max setting for 3 to 5 mintes.

After Each Use

1. Turn barbecue off as per "Turning Off" section.
2. While the barbecue is still warm, gently scrape off all food residue with a scraper.
3. Wipe down Barbecue surface, inner and outer walls with a towel or paper towels.
4. For stubborn food residue:
   a. Light Barbecue per "Lighting" section.
   b. Apply cooking oil onto Barbecue surface.
   c. Allow oil to "boil" food residue off.
   d. Repeat steps 1 through 3.
   e. If necessary, use a barbecue stone and scrub the food residue off.
5. Wipe off barbecue surface, inner and outer walls with paper towel until clean.
   Note: While dryig, you may notice the towel has some discoloration. This is normal.
6. Apply finishing oil onto barbecue surface, inner and outer walls and evenly coat with rolled up paper towels.
7. Light barbecue as per "Lighting" section.
8. Keep burners on medium high for 10 minutes or until finishing oil starts to smoke.
9. Turn barbecue off as per "Turning Off" section.
10. Repeat steps 6 - 9 with a minimum of 2 additional times.
11. Following "Before Storing" section.

Refurbish the Barbecue Surface

1. If barbecue is off, light as per "Lighting" section for 10 minutes. Then turn barbecue off as per "Turning off" section.
2. If barbecue is on, turn barbecue off as per "Turning Off" section.
3. While the Barbecue is still warm, use a scraper or metal spatula to remove as much rust and food residue as yo can from the Barbecue surface, inner and outer walls.
4. Apply a liberal amount of cooking oil onto the Barbecue surface.
5. Using a BBQ stone, scrub the Barbecue surface. Apply additional cooking oil as need.
6. Wipe off barbecue surface, inner and outer walls with paper towels.
7. Repeat steps 3-5 until paper towels no longer show any rust.
8. Apply finishing oil onto barbecue surface, inner and outer walls and evenly coat with rolled up paper towels.
9. Light Barbecue per "Lighting" section.
10. Keep burners on medium high for 10 minutes or until finishing oil starts to smoke.
11. Turn barbecue off as per "Turning off" section.
12. Repeat steps 7-10 until the surface has a nice dark color.
13. Following "Before Storing" section.

Warranty

Two-Year Limited Warranty

This warranty is non-transferable and does not cover failures due to misuse of improper installation or maintenance.

This warranty is for replacement of defective parts only. We are not responsible for incidental or consequential damage.

This warranty does not cover corrosion or discoloration after the grill is used, or lack of maintenance, hostile environment, accidents, alterations, abuse or neglect.

This warranty does not cover damage caused by heat, abrasive and chemical cleaners, or any damage to other components used in the installation or operation of the grill. And paint is not warranted and may require touch-up.

This warranty is void if this grill is ever used for commercial or rental purposes.

All warranty coverage applies only if this grill is used in the United States.

Some states do not allow the limitation or exclusion of incidental or consequential damages, so the above limitations or exclusions may not apply to you. This warranty gives you specific legal rights, and you may also have other rights that vary from state to state.

Customer Service

Please do not return the grill to store.
If you have any questions or if you need replacement parts, please contact our customer service:

1-855-200-8445

help@supportandspare.com

We are pleased to help you with any question concerning replacement parts or your warranty.
Proof of purchase in the form of an original receipt with date of purchase is required.
DO NOT ship parts or units without a return authorization number. Upon receipt of an authorization number, the product must be shipped prepaid.

Troubleshooting

Problem	Possible Cause	Prevention/Cure
Burner will not light using igniter	LP gas tank valve is closed	Make sure regulator is securely attached to the LP gas tank per "Installing LP Gas Tank," then turn LP gas tank valve to "OPEN"
	LP gas tank is low or empty	Exchange, refill or replace LP gas tank
	LP gas	1. Turn LP gas tank valve to "CLOSED" 2. Wait 5 minutes for gas to clear 3. Follow "Checking for Leaks" section
	Wires or electrode covered with cooking residue	Clean wire and/or electrode with rubbing alcohol
	Electrode and burners are wet	Wipe dry with cloth
	Electrode cracked/broken - sparks at crack	Replacement part(s) may be needed - contact Customer Care at 1.855.200.8445
	Wire loose or disconnected	Reconnect wire or replacement part(s) may be needed - contact Customer Care at 1.855.200.8445
	Wire is shorting (sparking) between ignitor and electrode	Replacement part(s) may be needed - contact Customer Care at 1.855.200.8445
	Bad igniter	Replacement part(s) may be needed - contact Customer Care at 1.855.200.8445
Burner will not light with match	No gas flow	Check if LP gas tank is empty A. If empty,exchange, refill or replace LP gas tank B. If LP gas tank is not empty, refer to "Sudden drop in gas flow or reduced flame height" (see below)
	LP gas tank is low or empty	Exchange, refill or replace LP gas tank
	LP gas	1. Turn LP gas tank valve to "CLOSED" 2. Wait 5 minutes for gas to clear 3. Follow "Checking for Leaks" section
	Coupling nut and regulator not fully connected	Turn the coupling nut about one-half to three-quarters additional turn until solid stop.Tighten by hand only - do NOT use tools
	Obstruction of gas flow	1. Clear burner/venturi tube 2. Check for bent or kinked hose
	Disengagement of burner to valve	Reengage burner and valve
	Spider webs or insect nest in venturi	Clean burner/venturi tube
	Burner ports clogged or blocked	Clean burner ports
Sudden drop in gas flow or reduced flame height	Out of gas	Exchange, refill or replace LP gas tank
	Overfilling prevention device may have been activated	1. Turn control knobs to "● OFF" 2. Wait 30 seconds and light grill 3. If flames are still too low, reset the overfilling prevention device: a. Turn control knob(s) "● OFF" b. Turn LP gas tank valve to "CLOSED" c. Disconnect regulator d. Turn control knobs to 🔥 (HIGH) e. Wait 1 minute f. Turn control knobs to "● OFF" g. Reconnect regulator and leak check connections, being careful not to fully open valve h. Light grill per "Lighting" section
Irregular flame pattern, flame does not run the full length of burner	Burner ports are clogged or blocked	Clean burner ports
Flame is yellow or orange	New burner may have residual manufacturing oils	Burn grill for 15 minutes on 🔥 (HIGH) with the lid closed
	Spider webs or insect nest in venturi	Clean venturi
	Food residue, grease, etc. on burners	Clean burner
	Poor alignment of valve to burner/venturi tube	Ensure burner/venturi tube is properly engaged with valve

Troubleshooting

Problem	Possible Cause	Prevention/Cure
Flame goes out	High or gusting winds	Do not use grill in high winds
	Low on LP Gas	Exchange, refill or replace LP gas tank
	Overfilling prevention device may have been activated	Refer to “Sudden drop in gas flow or reduced flame height” (see above)
Flare-up	Grease buildup	Remove and clean all grill parts per “Cleaning and Care” section
	Excess fat in meat	Trim fat from meat before grilling
	Excessive cooking temperature	Adjust to lower cooking temperature
Persistent grease fire	Grease trapped by food buildup around burner system	1. Turn control knobs to “ ● OFF” 2. Turn LP gas tank valve to “CLOSED” 3. Leave lid in closed position and let fire burn out 4. After grill cools, remove and clean all parts per “Cleaning and Care” section
Flashback (fire in burner tube(s))	Burner and/or burner/venturi tube are blocked	Clean burners and/or burner/venturi tube
Inside of lid is peeling (like paint peeling)	Baked on grease buildup has turned to carbon and is flaking off.	Clean all grill parts per “Cleaning and Care” section.

Captivate Brands USA, Inc.
25541 Arctic Ocean Drive,
Lake Forest, CA.92630
If you have any questions or problems,
you can contact our customer service at
1-855-200-8445 ext 102 or
help@supportandspare.com
from 9:00 AM - 5:00 PM Monday to Friday.
(Pacific). All emails and voice-mail calls
will be answered within 24 hours.