FPB-749/FPB-750 V1.0

Cabinet > Manual

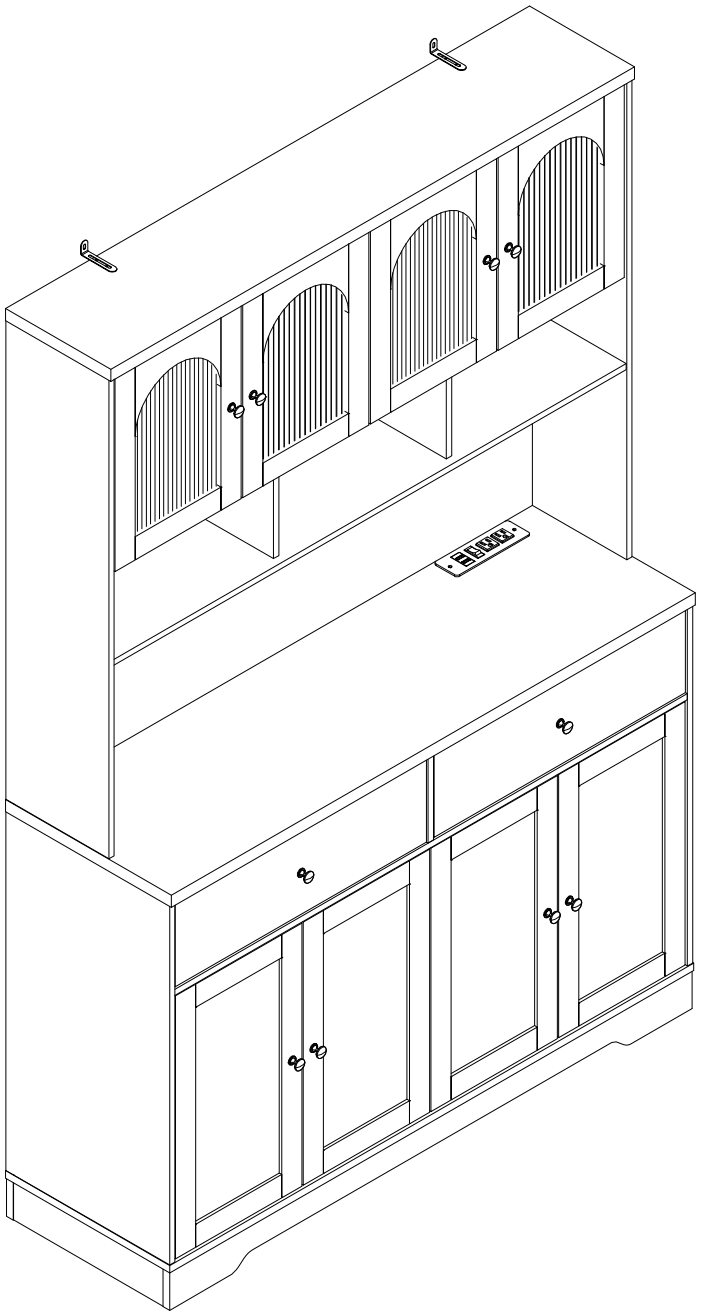

Thank you for purchase on our products. Please contact us if you have difficulty with assembly or need replacement parts. Our customer service is here to assist you.
Please attach your User Name or Order ID so that we can assist you better.

Vielen Dank für Ihren Kauf von uns Produkten. Bitte kontaktieren Sie uns, wenn Sie Probleme mit Montage haben oder Ersatzteile benötigen. Wir Kundenservice ist für Sie da.
Bitte geben Sie Ihren Benutzernamen oder Ihre Bestellnummer an, damit wir Sie besser unterstützen können.

EN

Thank you for purchase on our products. Please contact us if you have difficulty with assembly or need replacement parts. Our customer service is here to assist you.
Please attach your User Name or Order ID so that we can assist you better.

WARNING

Serious or fatal injury may occur from unexpected assembly or use.

1. During the assembly process, keep all parts away from babies or children.
2. Always securely fix this product to the wall. Make sure the wall area to be drilled is free from hidden electrical wires, water and gas pipes.
3. Use of tip-over restraints may only reduce, but not eliminate the risk of tip-over.
4. Unless specially designed to accommodate, do not set heavy objects on top of this product.
5. Place the heaviest items on the lowest shelf.
6. Never allow children to climb or bang on drawers, doors or shelves.

DE

Vielen Dank für Ihren Kauf von uns Produkten. Bitte kontaktieren Sie uns, wenn Sie Probleme mit Montage haben oder Ersatzteile benötigen. Wir Kundenservice ist für Sie da.
Bitte geben Sie Ihren Benutzernamen oder Ihre Bestellnummer an, damit wir Sie besser unterstützen können.

WARNUNG

Bei unerwarteter Montage oder Verwendung können schwere oder tödliche Verletzung auftreten.

1. Legen Sie in den Montageprozess alle Teile weg von Babys oder Kindern.
2. Stellen Sie sicher, dass der gebohrte Wandbereich frei von verborgenen Stromkabeln, Wasser- und Gasleitungen ist, wenn Sie dieses Produkt an der Wand befestigen.
3. Die Verwendung von Kippsicherungen kann die Gefahr eines Kippens nur verringern, jedoch nicht beseitigen.
4. Setzen Sie bitte keine schweren Gegenstände auf dieses Produkt, es sei denn, dass das Produkt speziell für die Unterbringung konzipiert wird.
5. Legen Sie bitte die schwersten Gegenstände auf das unterste Regal.
6. Erlauben Sie nie Kindern, auf Schubladen, Türen oder Regale zu klettern oder zu knallen.

Parts List(EN) / Teile Liste(DE)

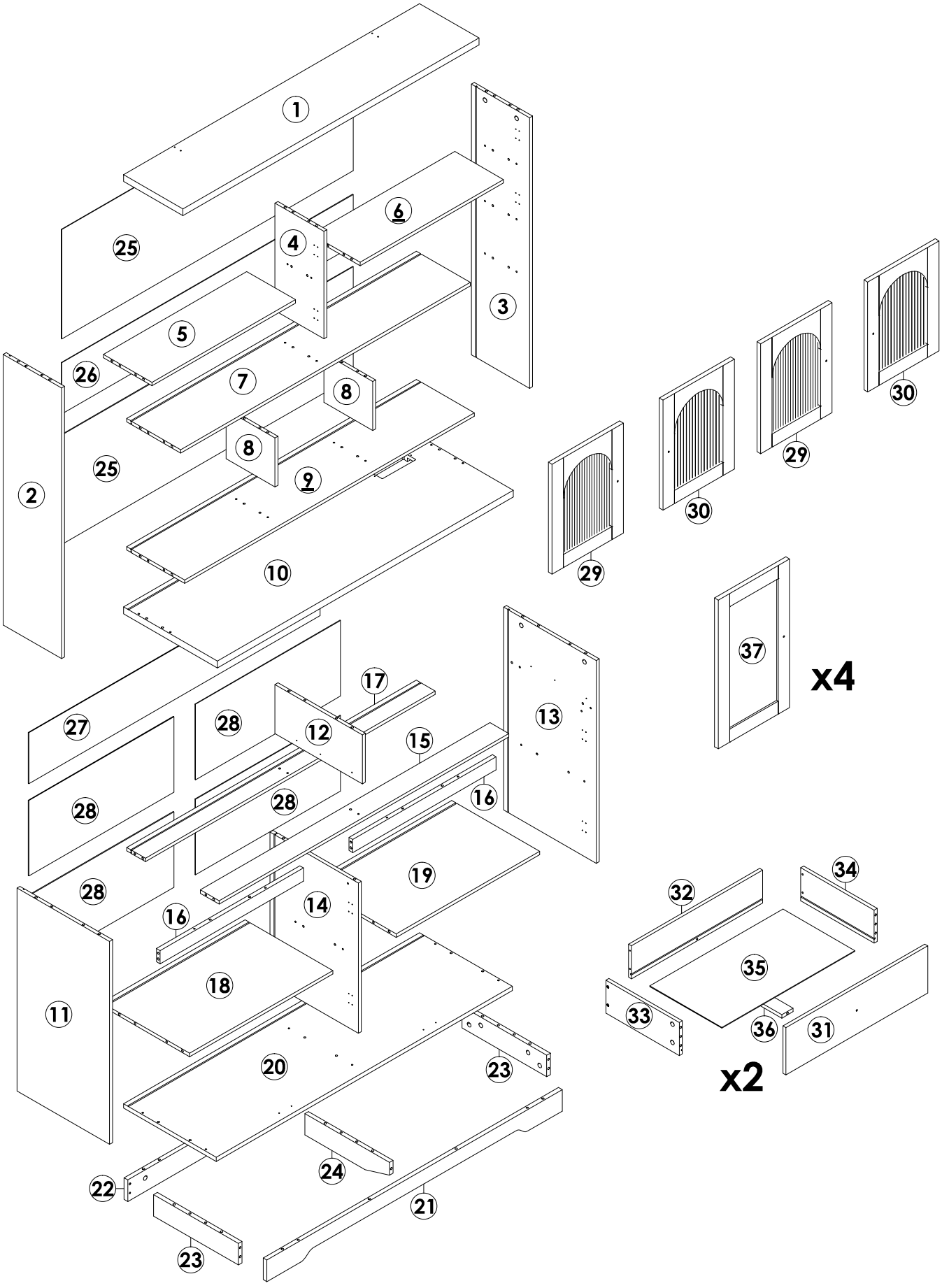

Parts List(EN) / Teile Liste(DE)

A 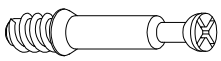 M6x35mm 76+2PCS	**B** 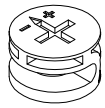 Ø15x9mm 76+2PCS	**C**  M4x40mm 30+2PCS	**D**  Ø6x30mm 79+2PCS
E  M3x12mm 36+2PCS	**F** 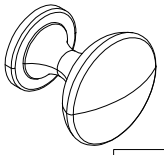 10PCS	**G** 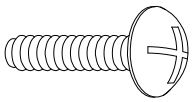 M4x16mm 10+1PCS	**H** 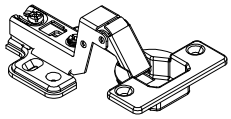 Ø35mm 8PCS
I 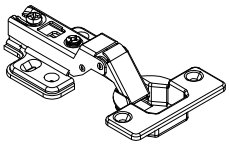 Ø35mm 8PCS	**J** 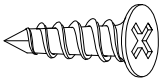 M3.5x12mm 96+2PCS	**K** 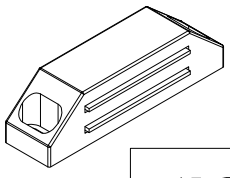 6PCS	**L** 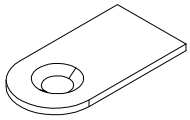 12+1PCS
M 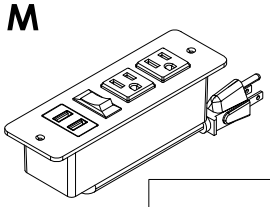 1PC	**N** 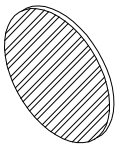 Ø20mm 30+2PCS	**O** 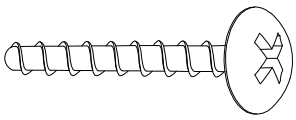 M4x35mm 4PCS	**P** 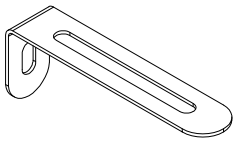 2PCS
Q 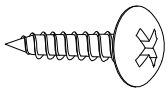 M4x12mm 4PCS	**R** 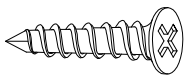 M3x14mm 46+2PCS	**S** 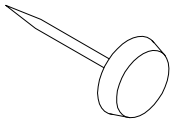 11+1PCS	**T**  Ø6x50mm 4PCS
U 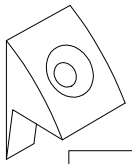 32+2PCS	**V** 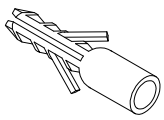 Ø6x30mm 2PCS	**W** 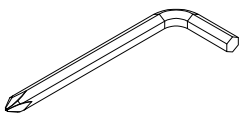 M4mm 1PC	**X** 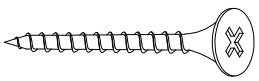 M4x50mm 4PCS
CL 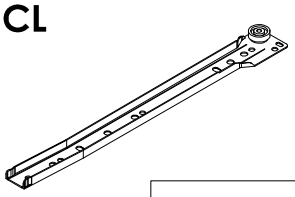 300mm 2PCS	**CR** 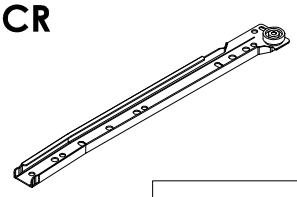 300mm 2PCS	**DL** 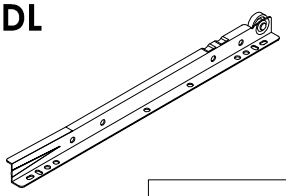 300mm 2PCS	**DR** 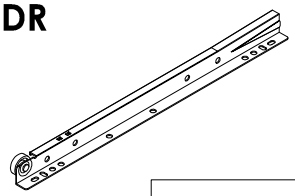 300mm 2PCS

Assembly Steps(EN) / Montageschritte(DE)

STEP 1

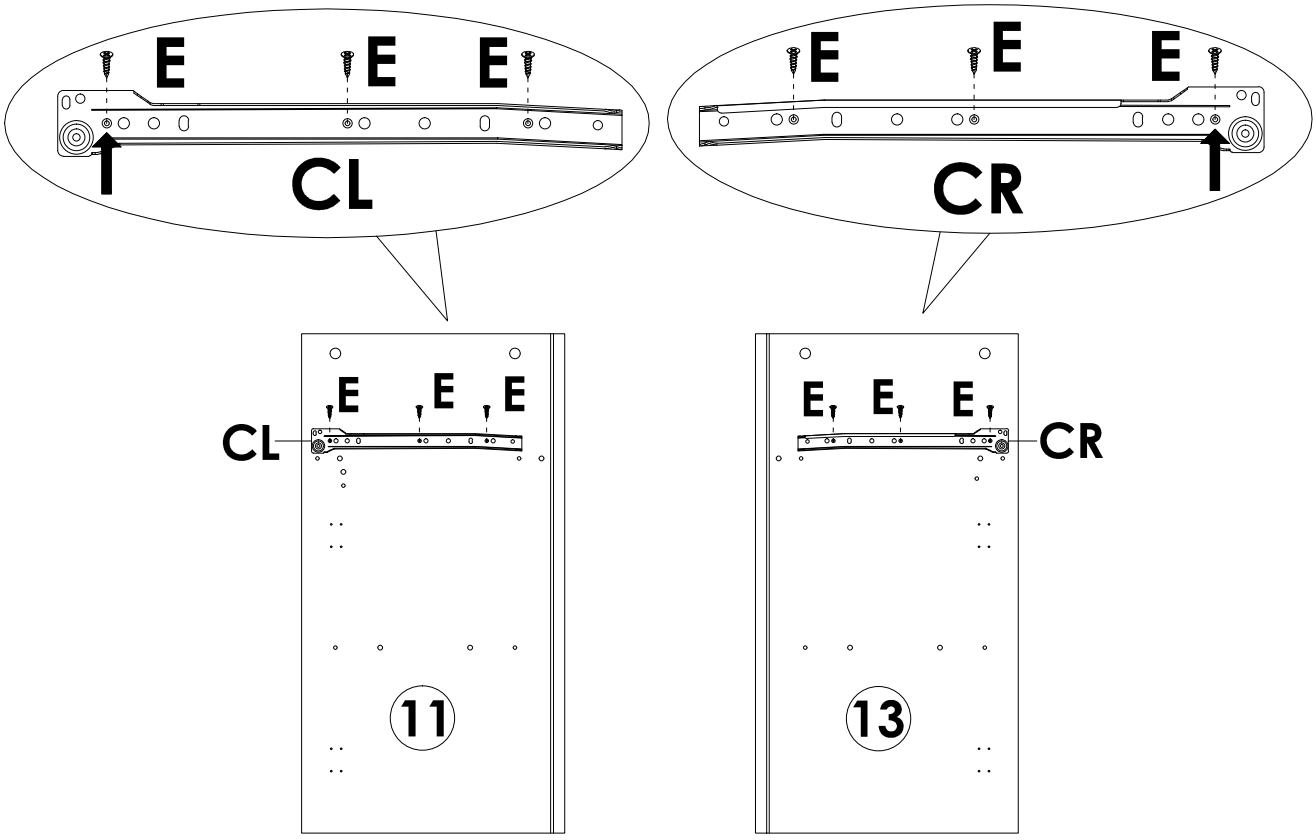

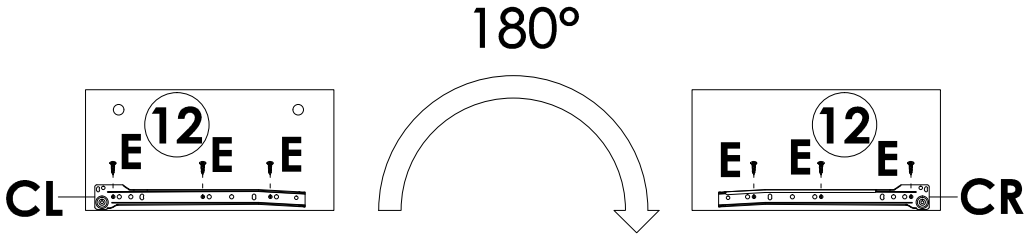

⚠ **Turn over part ⑫ to install the other side.**

	**E** x 12PCS
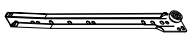	**CL** x 2PCS
	**CR** x 2PCS

STEP 2

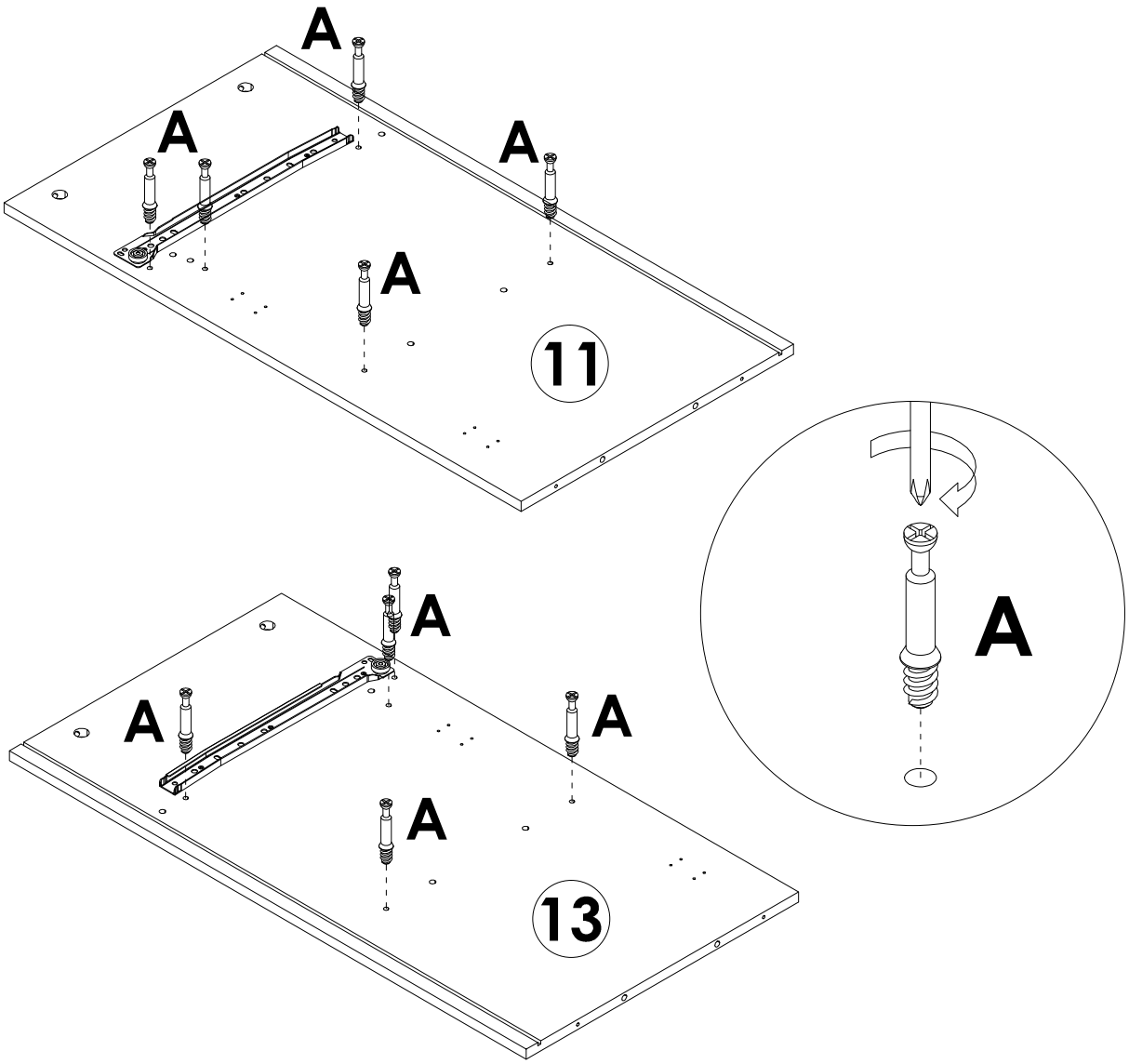

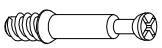	**A** x 10PCS

STEP 3

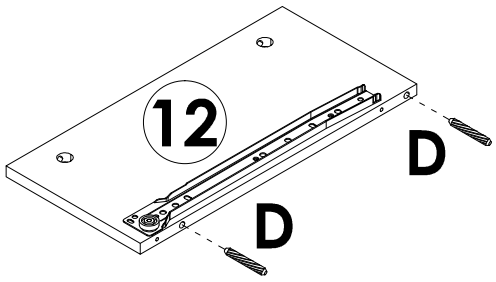

	**D** x 2PCS

Assembly Steps(EN) / Montageschritte(DE)

STEP 4

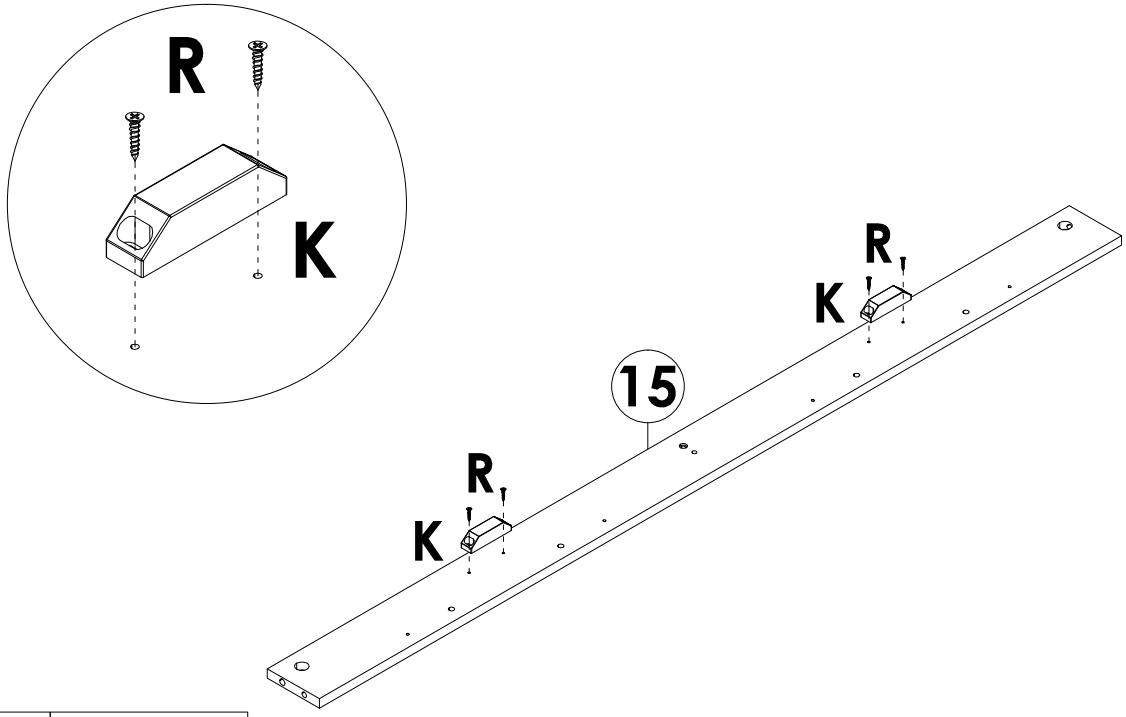

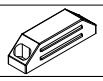	**K** x 2PCS
	**R** x 4PCS

STEP 5

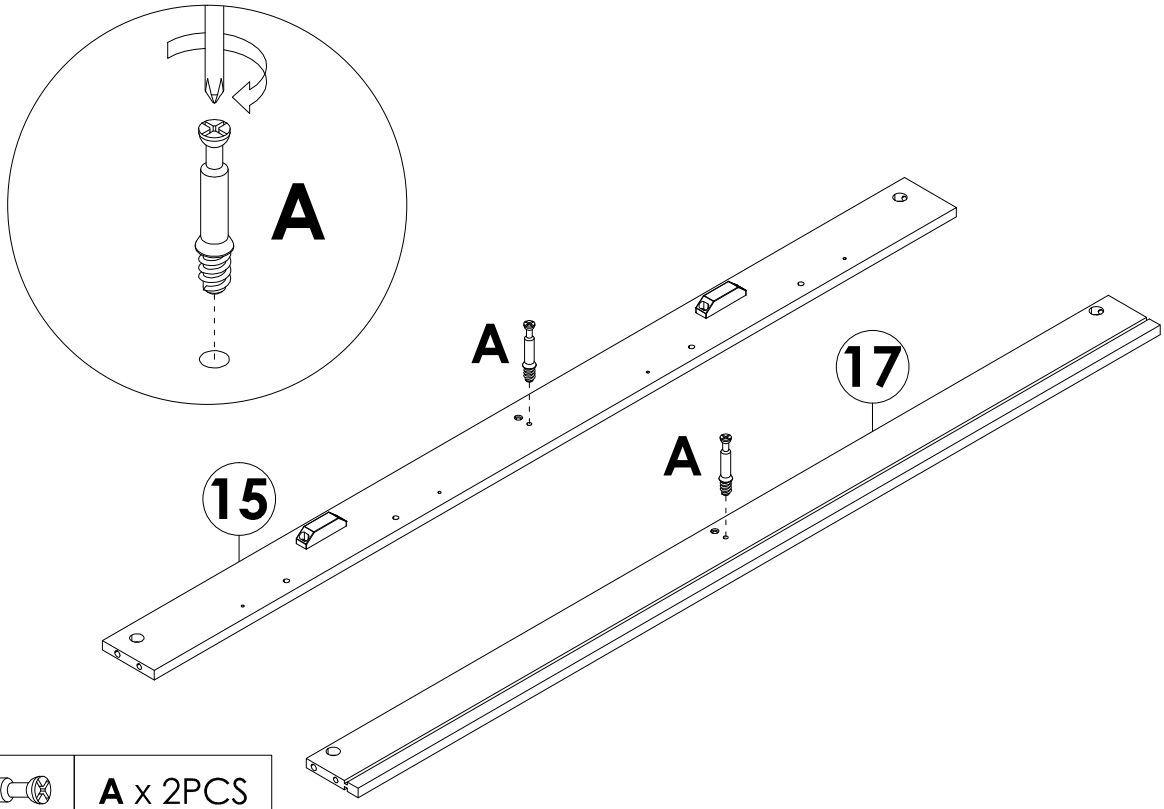

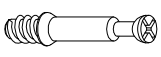	**A** x 2PCS

STEP 6

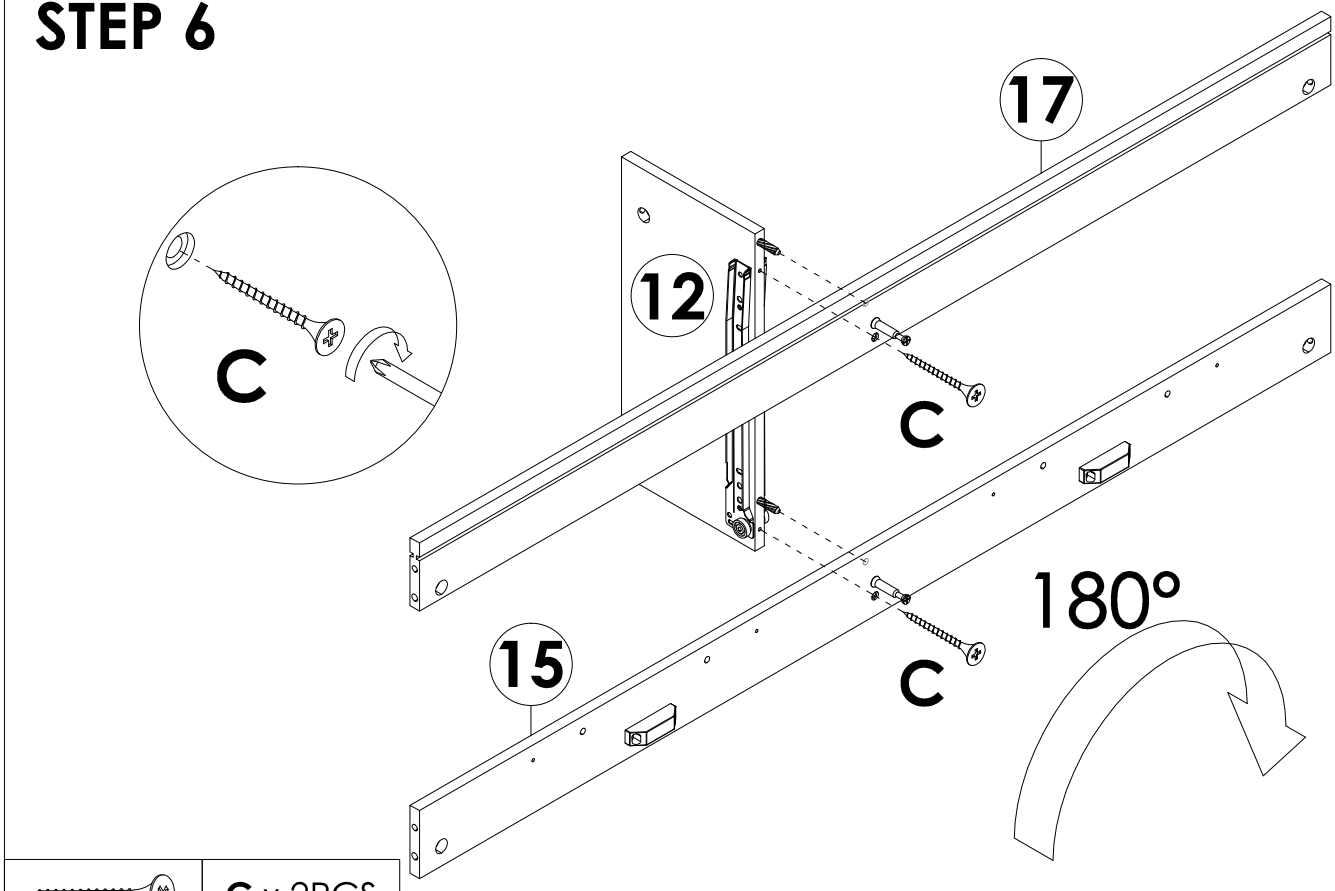

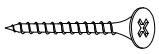

C x 2PCS

STEP 7

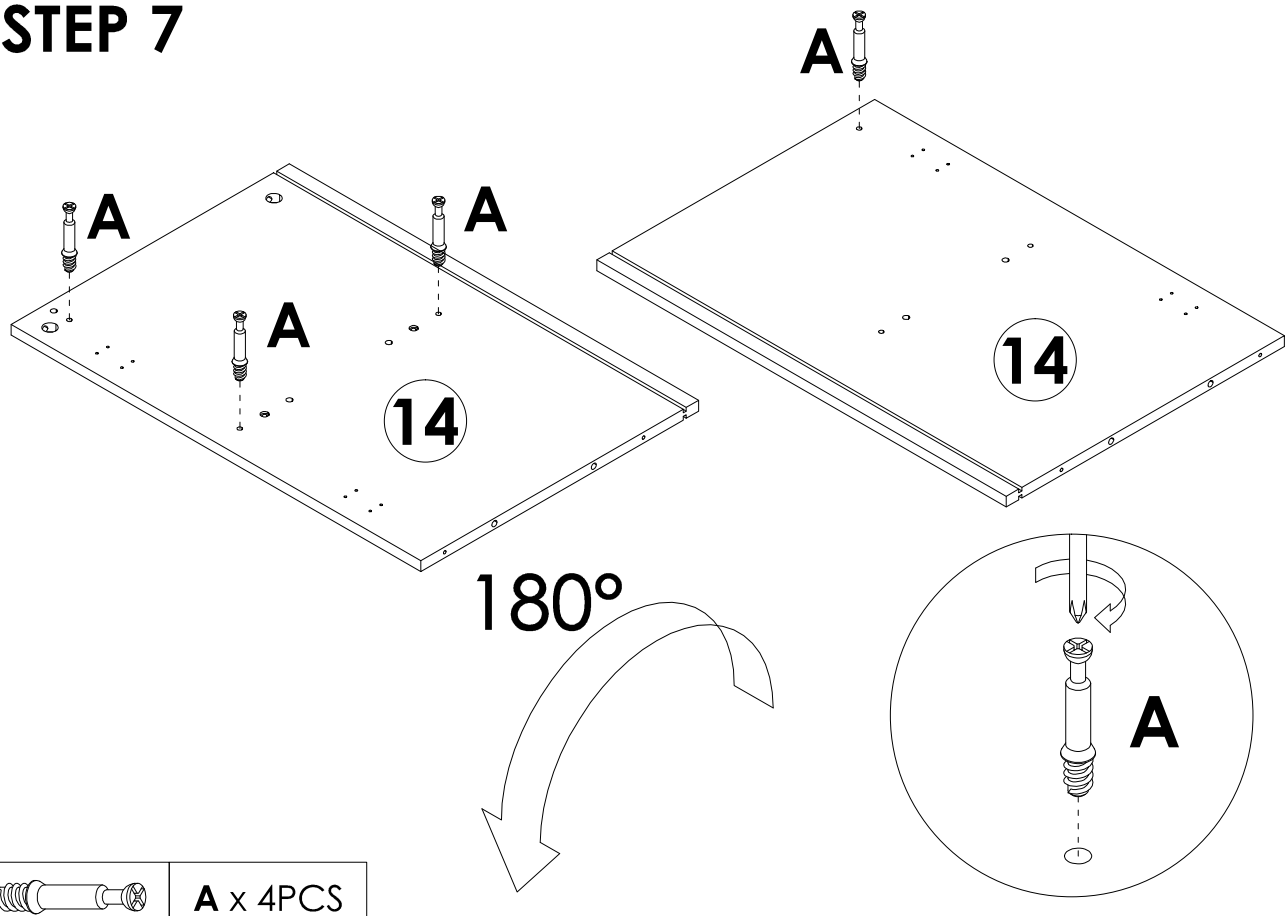

A x 4PCS

STEP 8

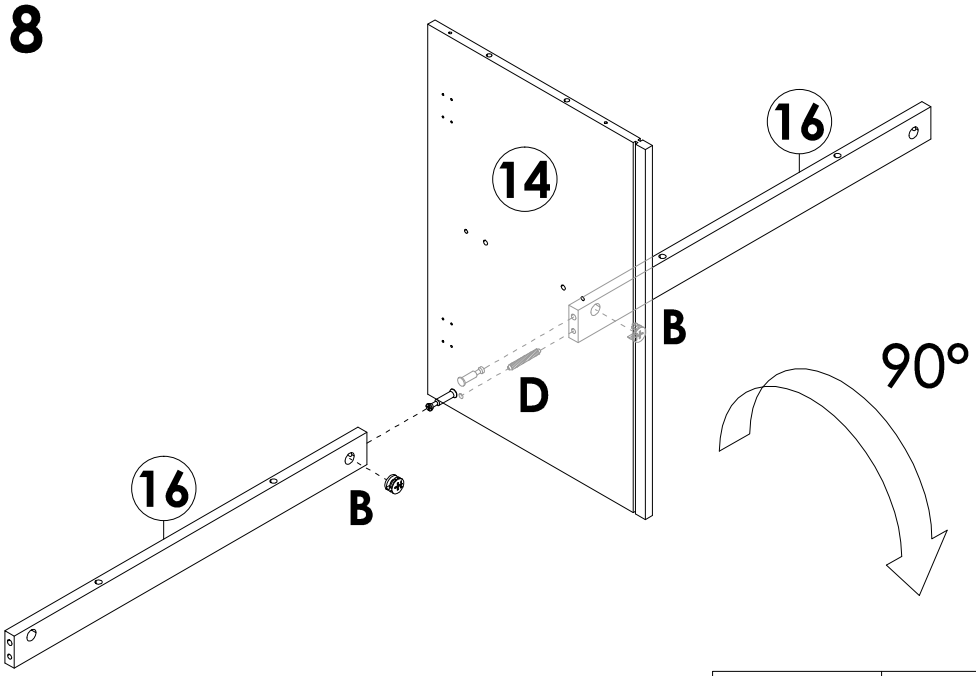

	B x 2PCS
	D x 1PC

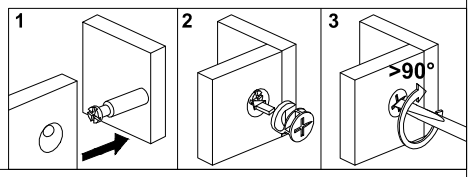

STEP 9

Someone hold #16 to keep it horizontal

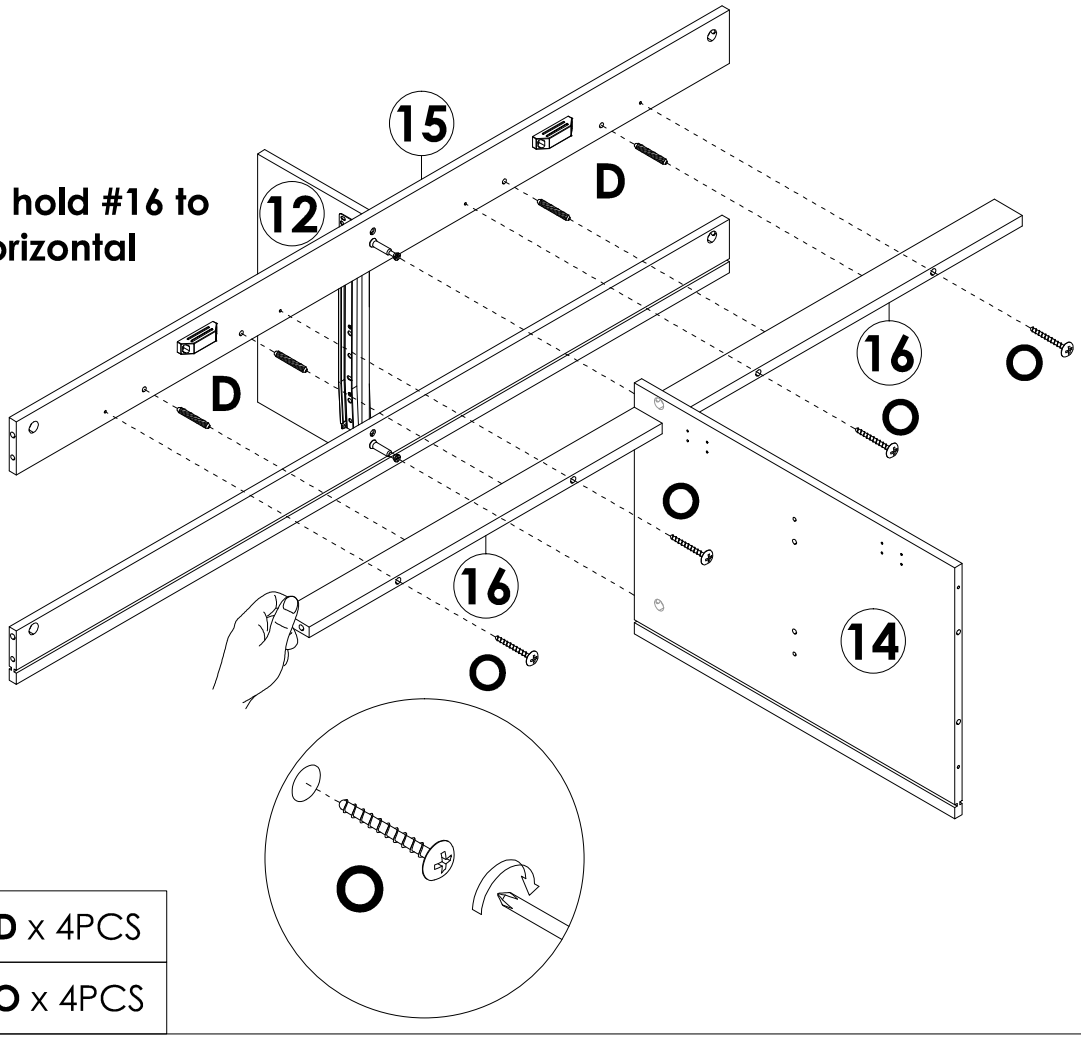

	D x 4PCS
	O x 4PCS

STEP 10

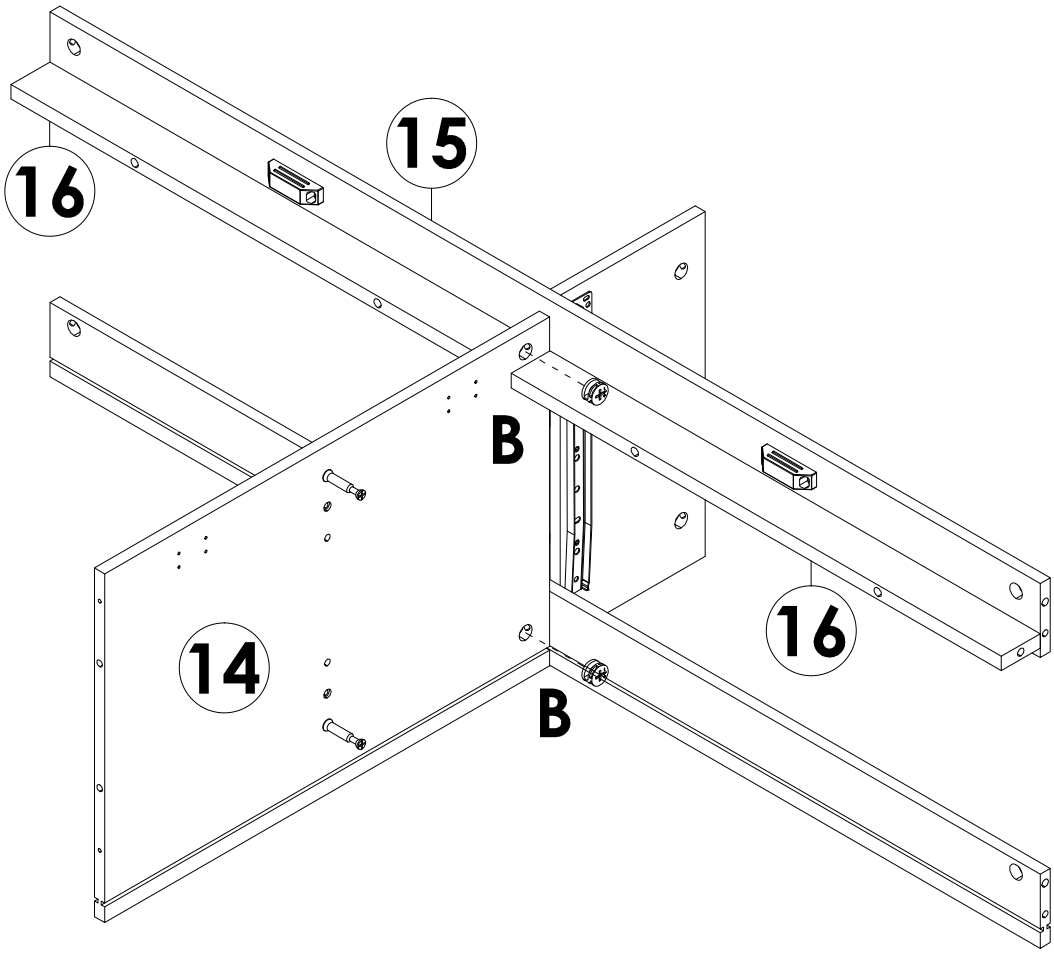

	**B** x 2PCS

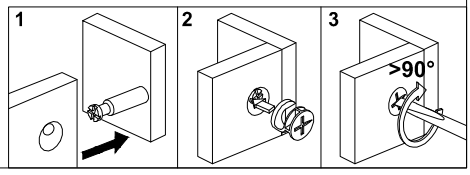

STEP 11

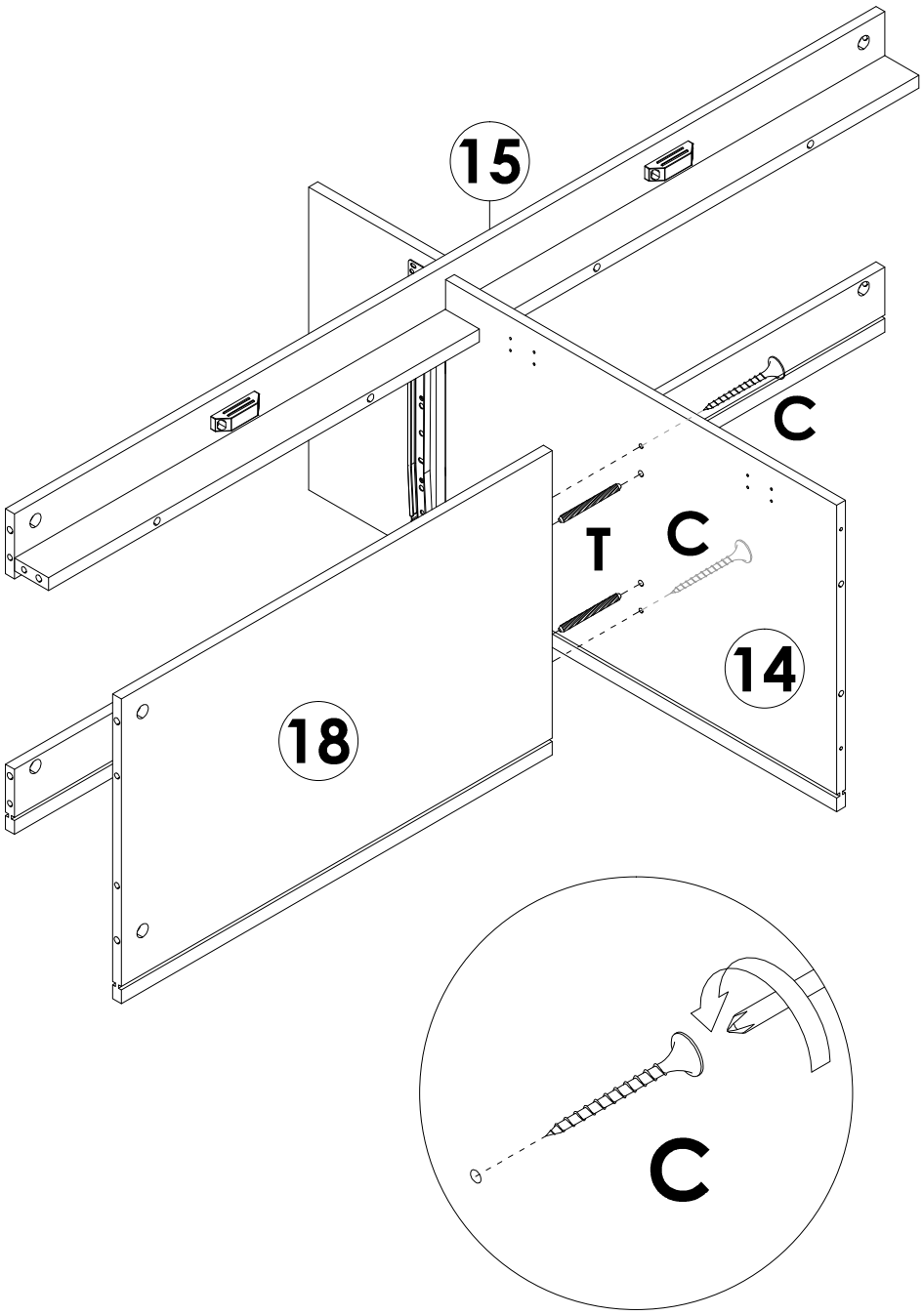

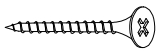	**C** x 2PCS
	**T** x 2PCS

STEP 12

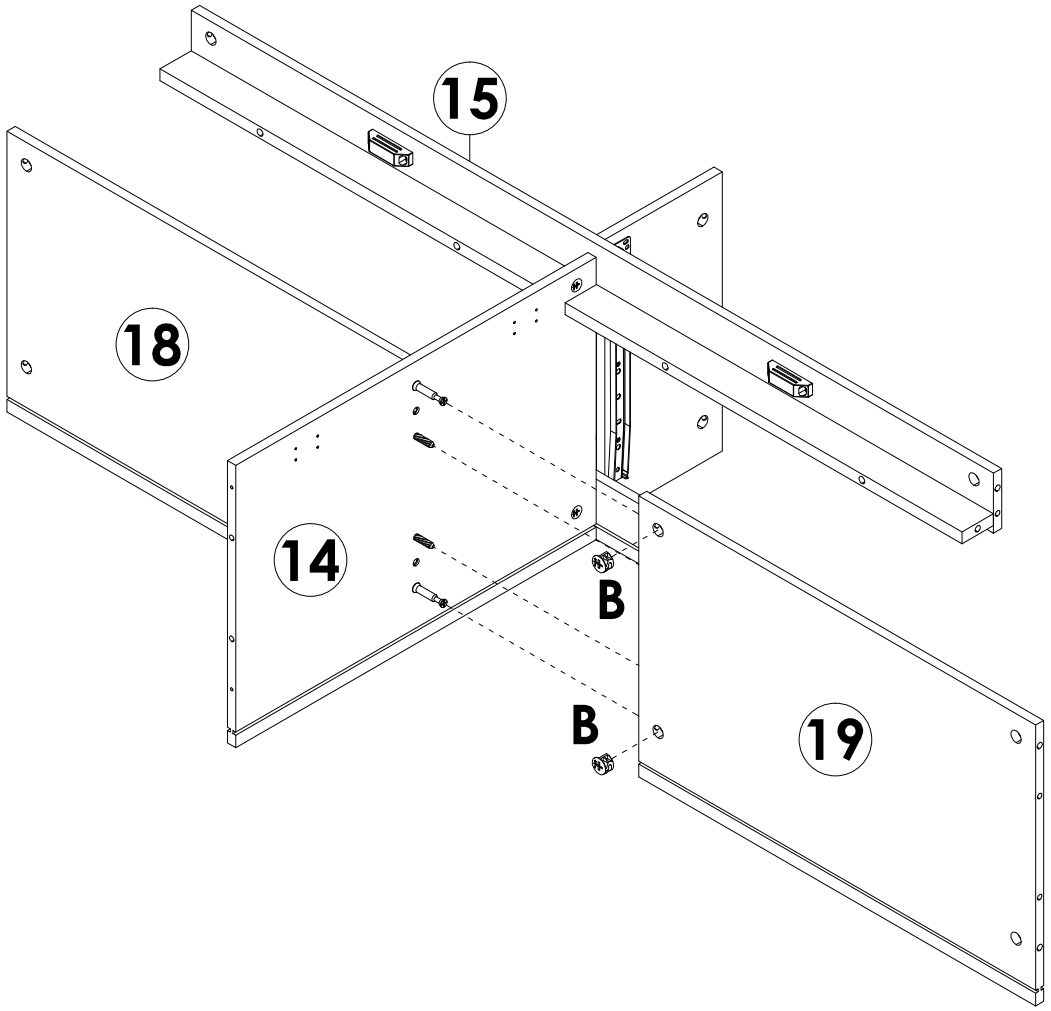



B x 2PCS

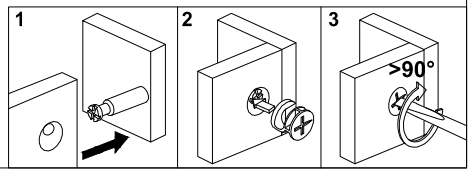

STEP 13

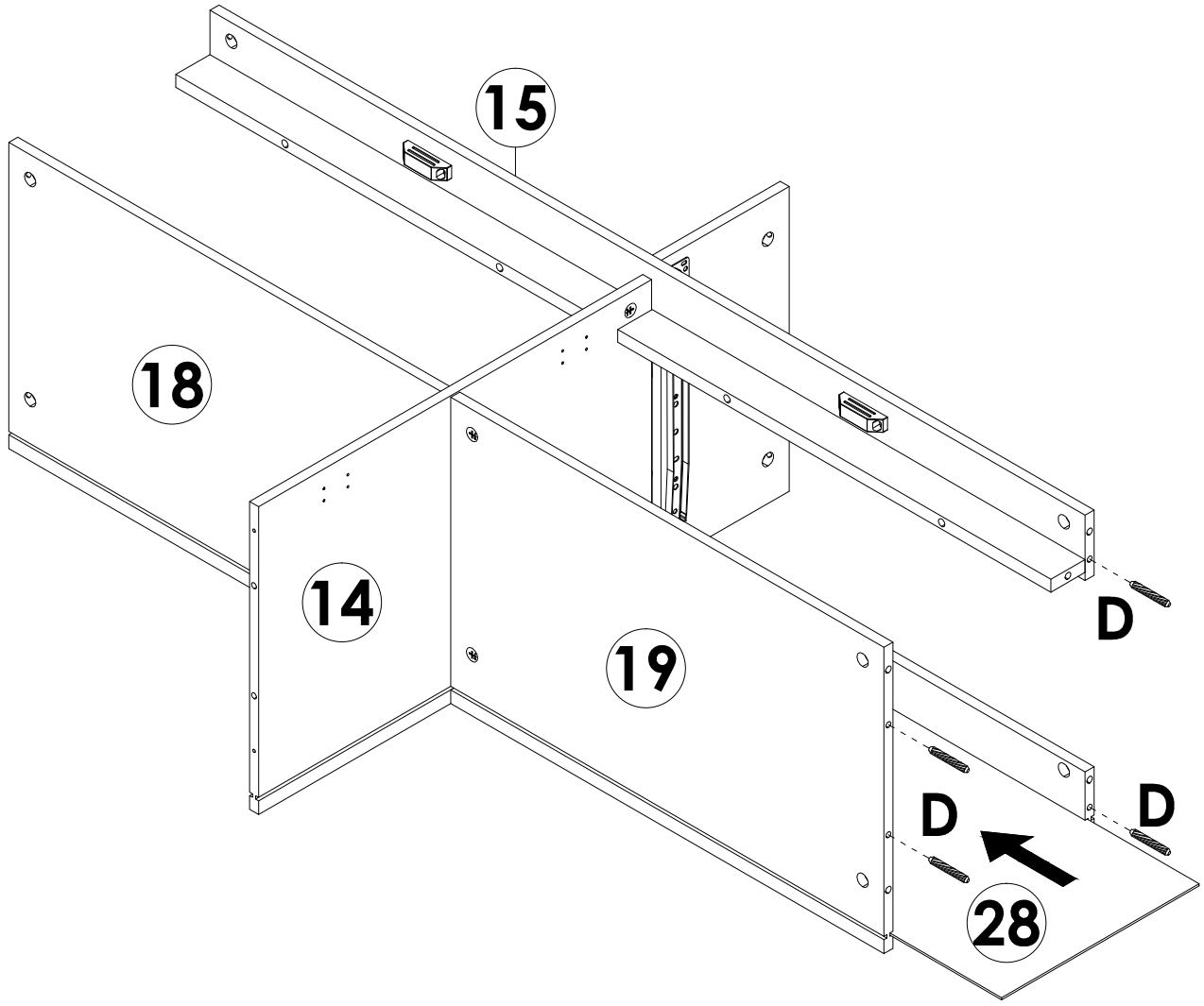

	**D** x 4PCS

STEP 14

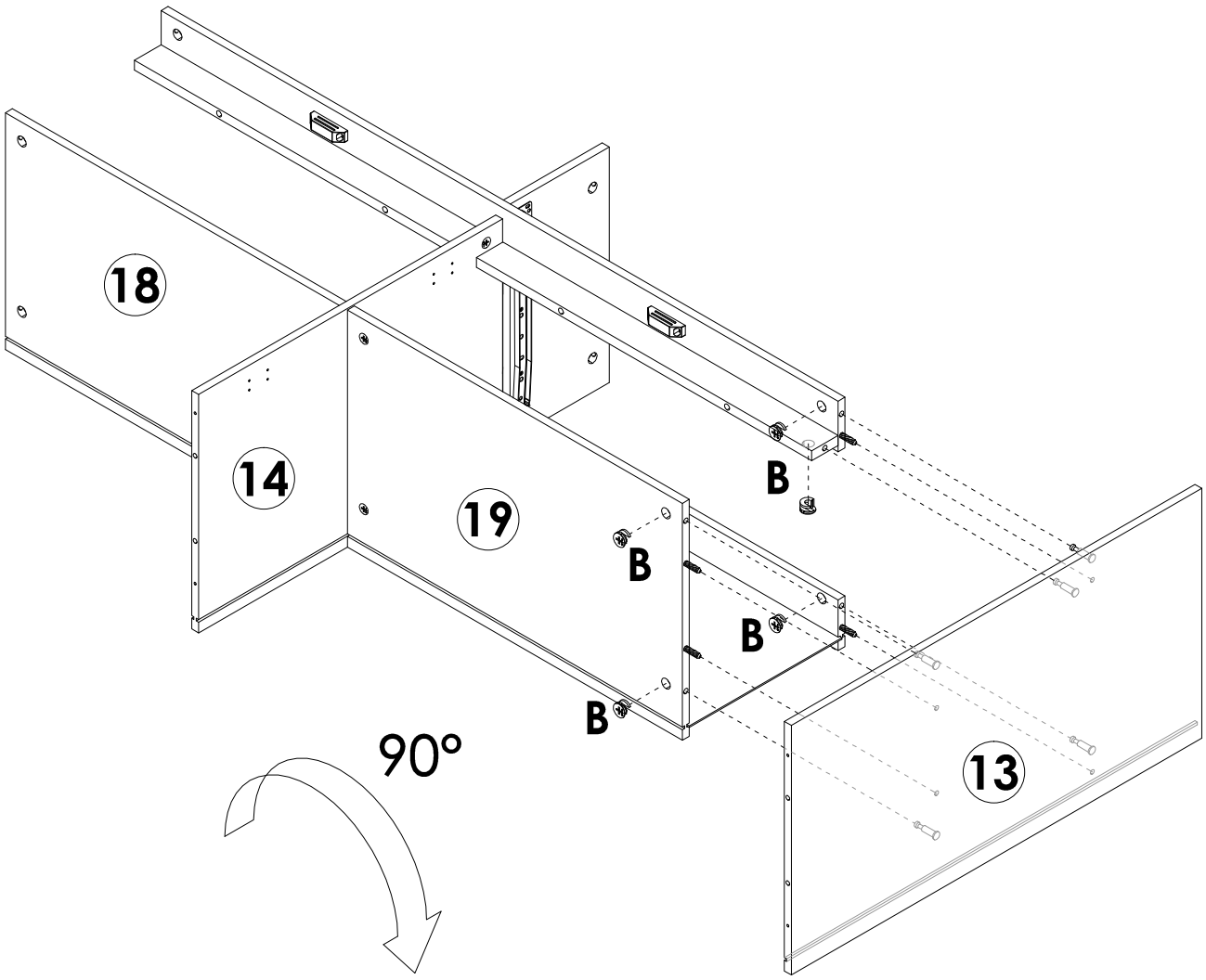

	**B** x 5PCS

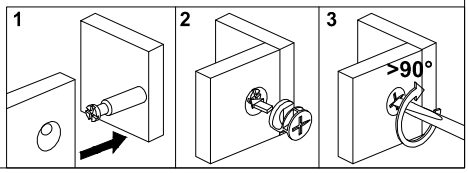

STEP 15

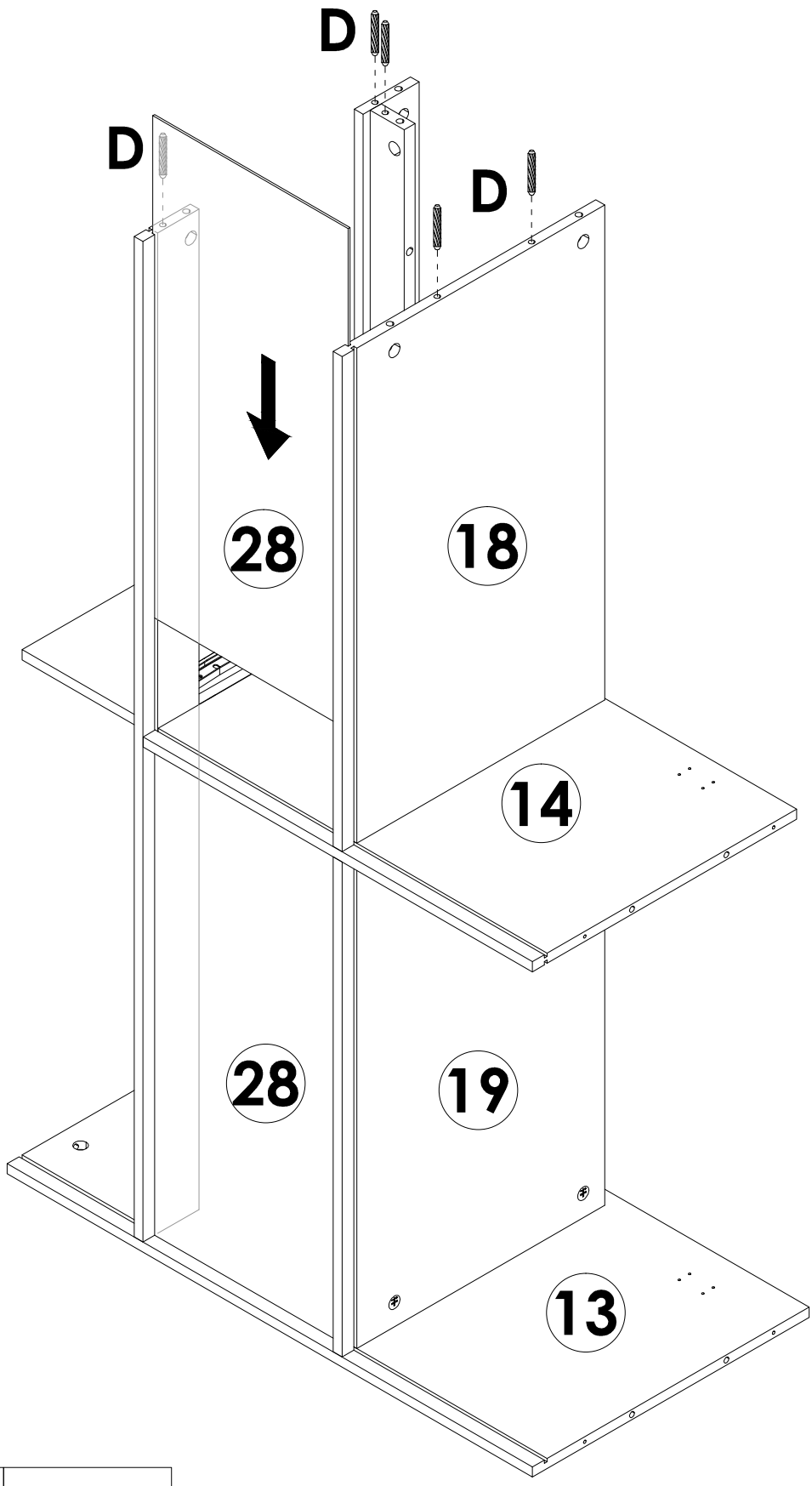

	**D** x 5PCS

STEP 16

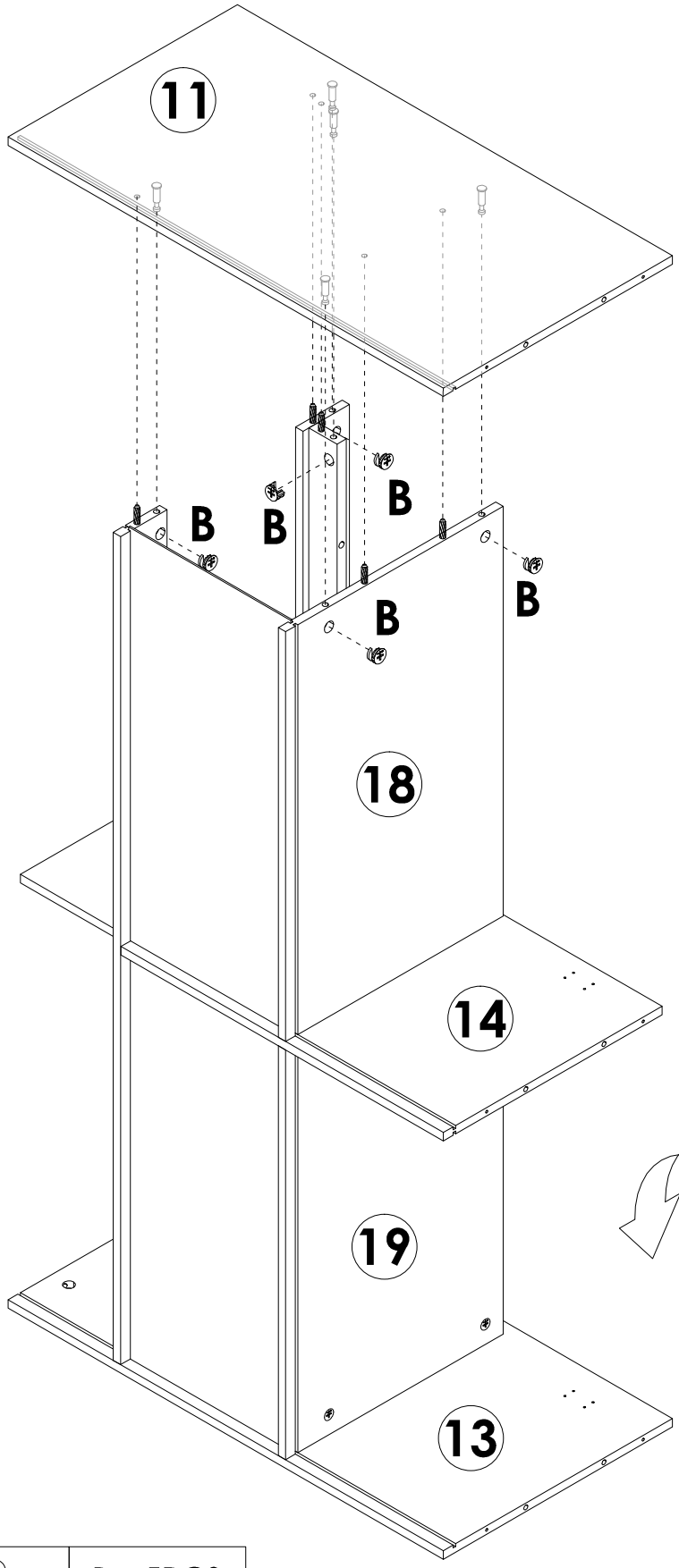

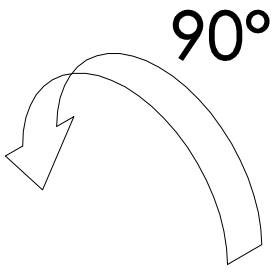

	**B** x 5PCS

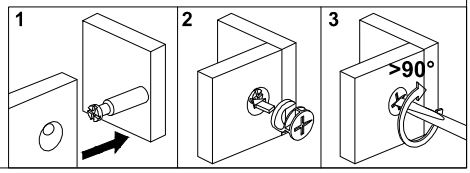

STEP 17

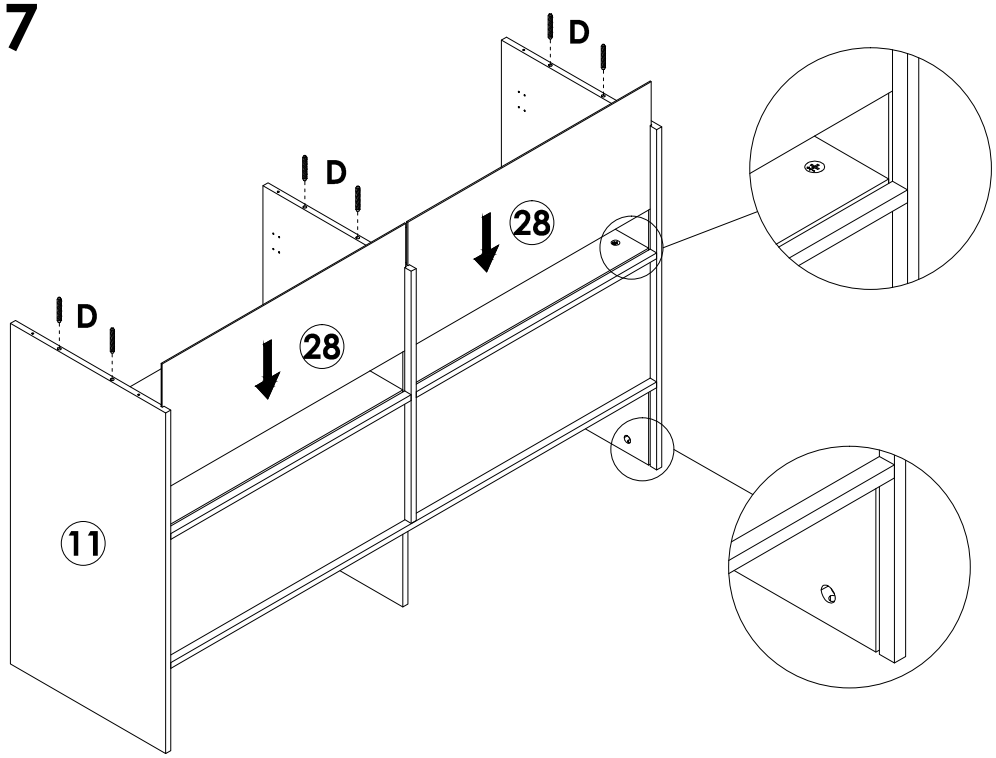



D x 6PCS

STEP 18

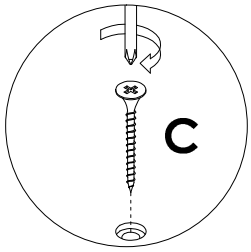

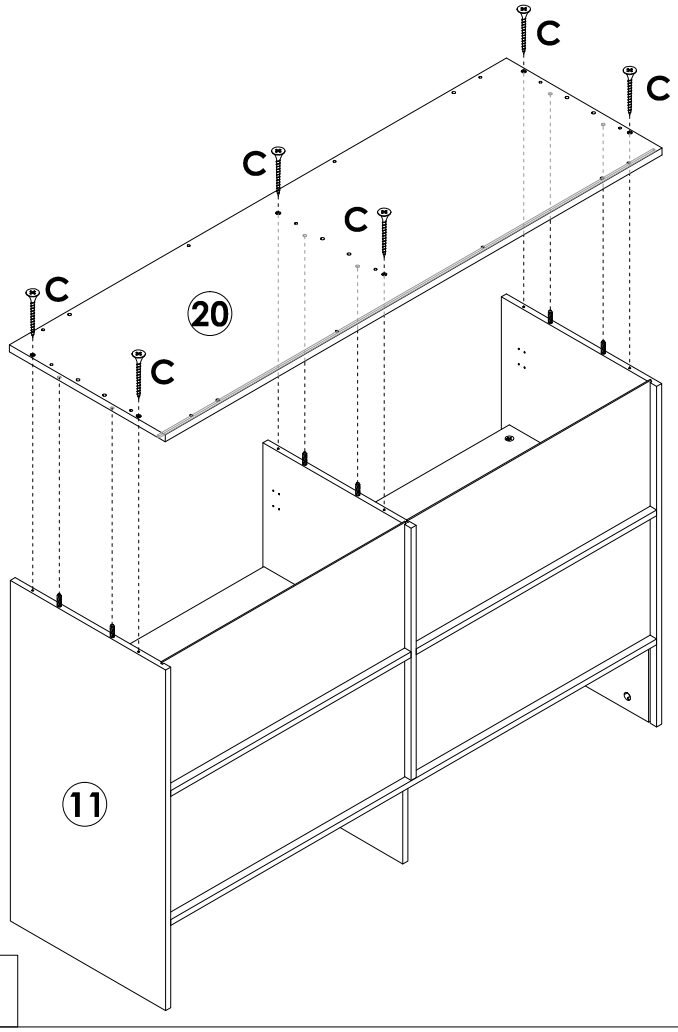

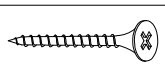

C x 6PCS

STEP 19

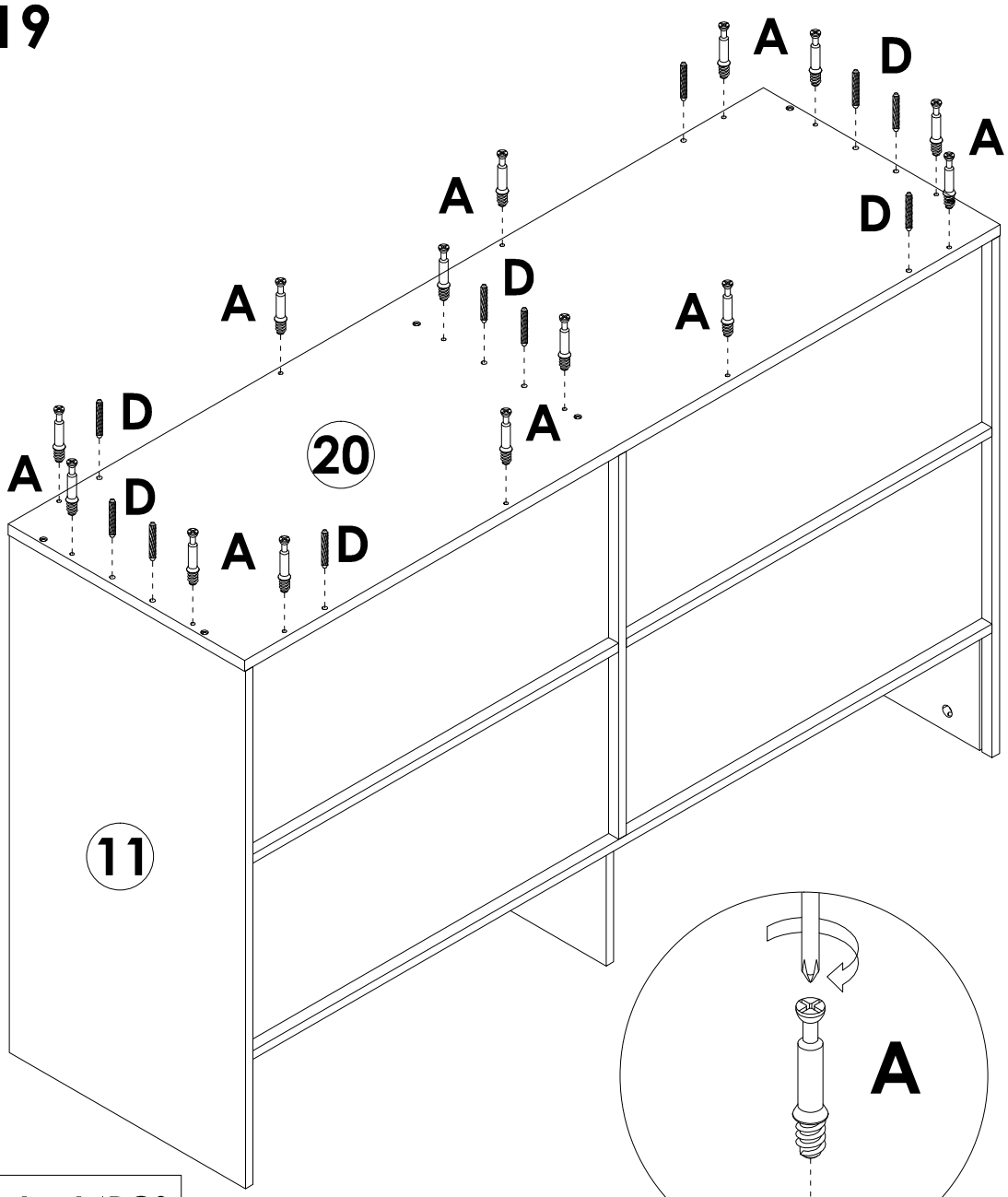

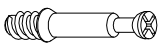	**A** x 14PCS
	**D** x 10PCS

STEP 20

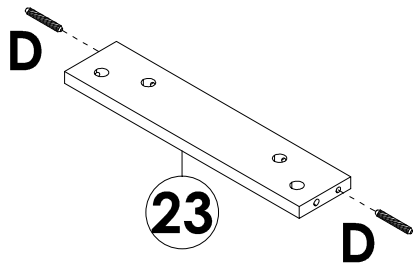

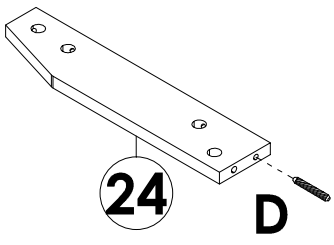

x2

	**D** x 5PCS

STEP 21

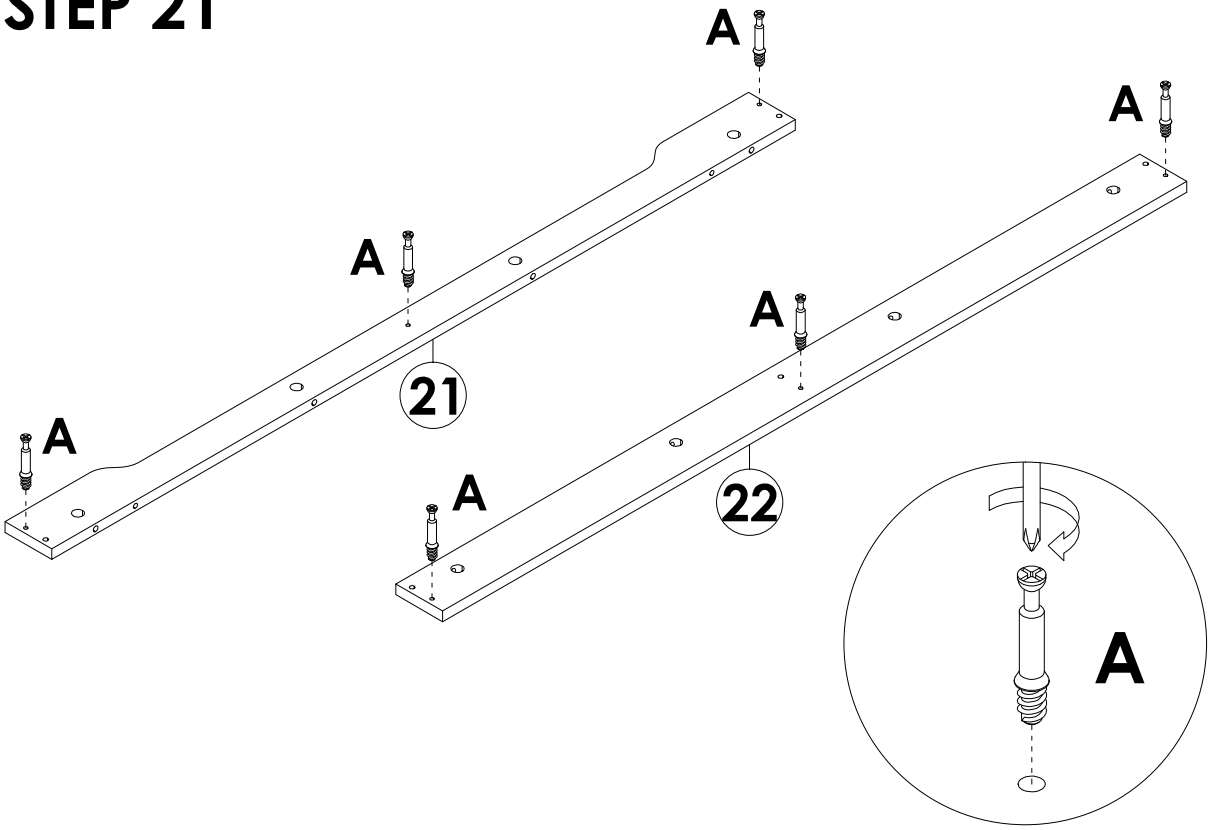

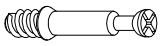

A x 6PCS

STEP 22

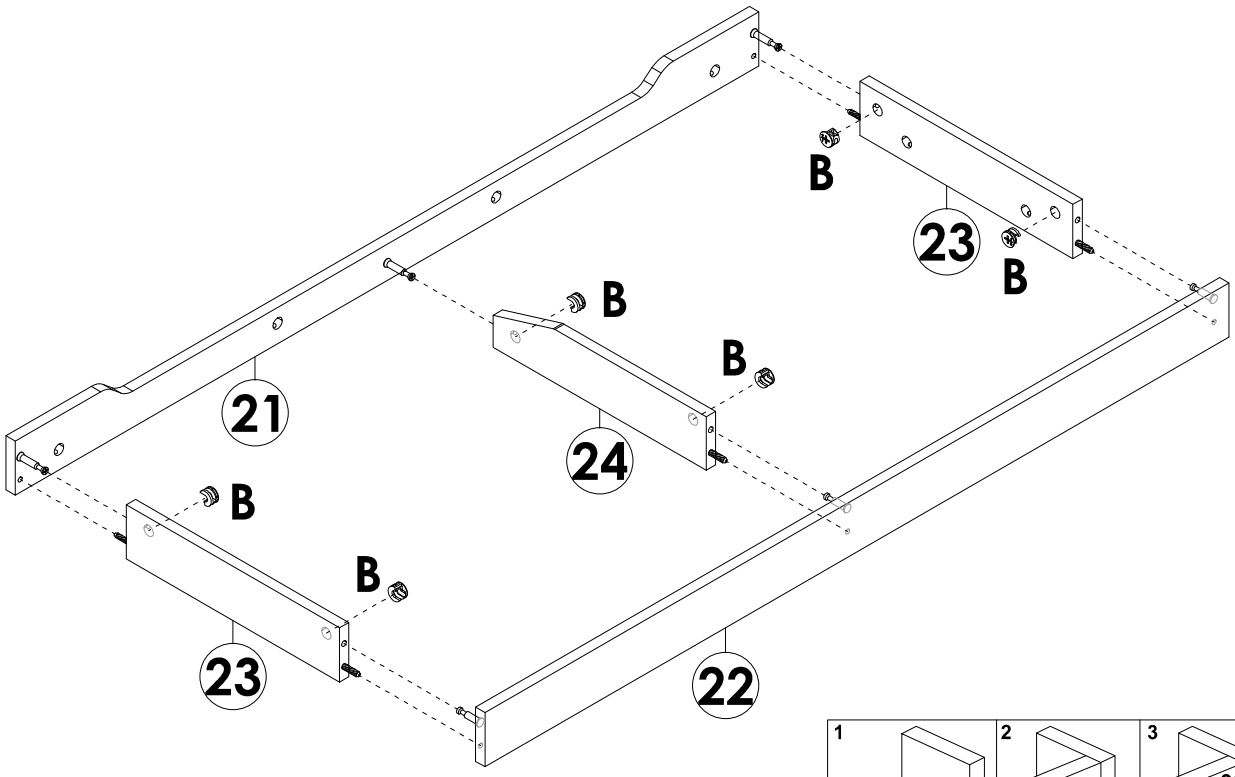

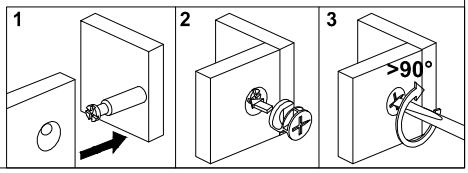



B x 6PCS

STEP 23

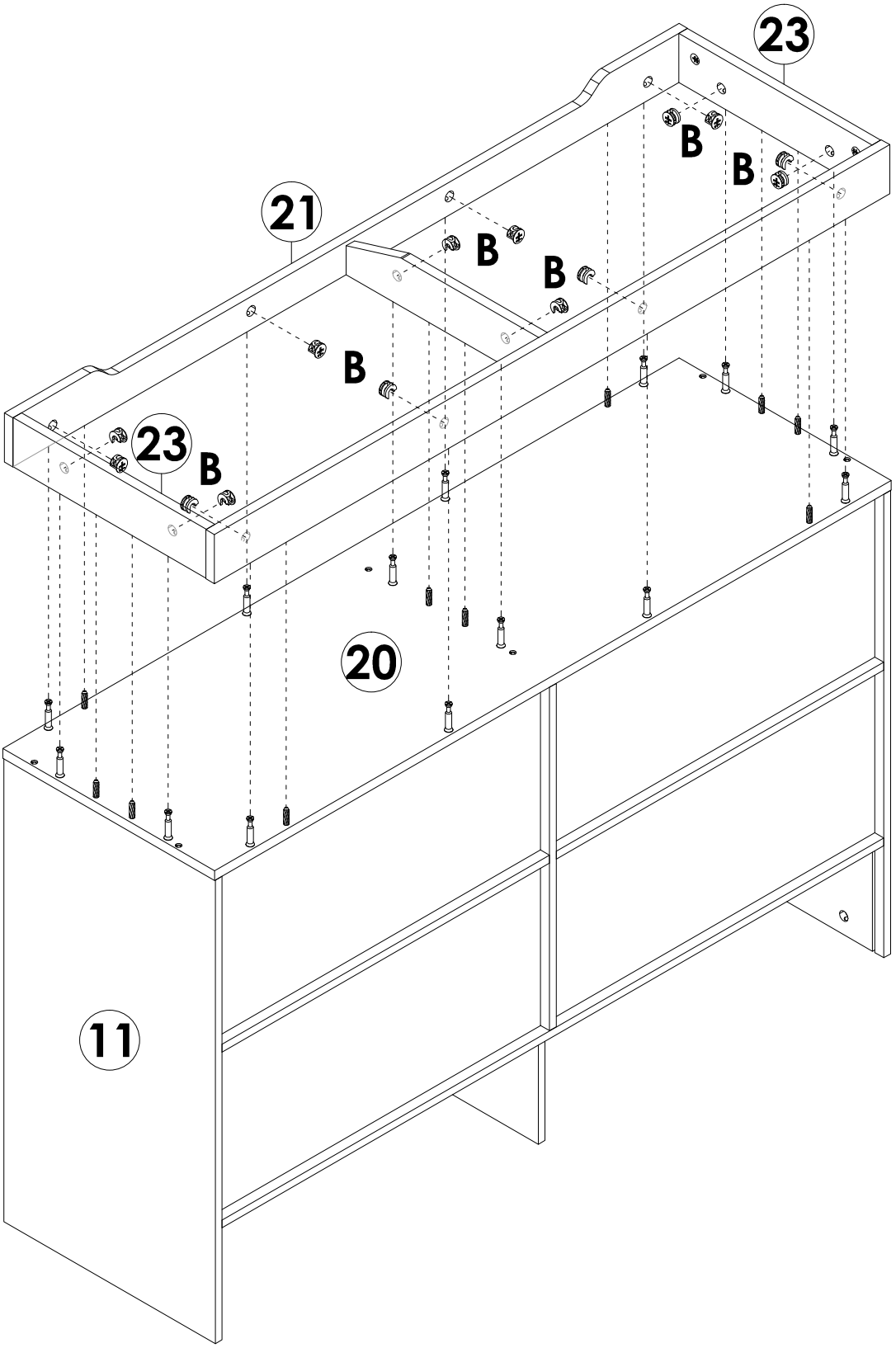

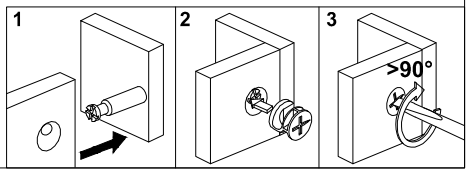

	**B** x 14PCS

STEP 24

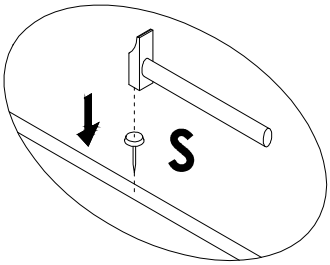

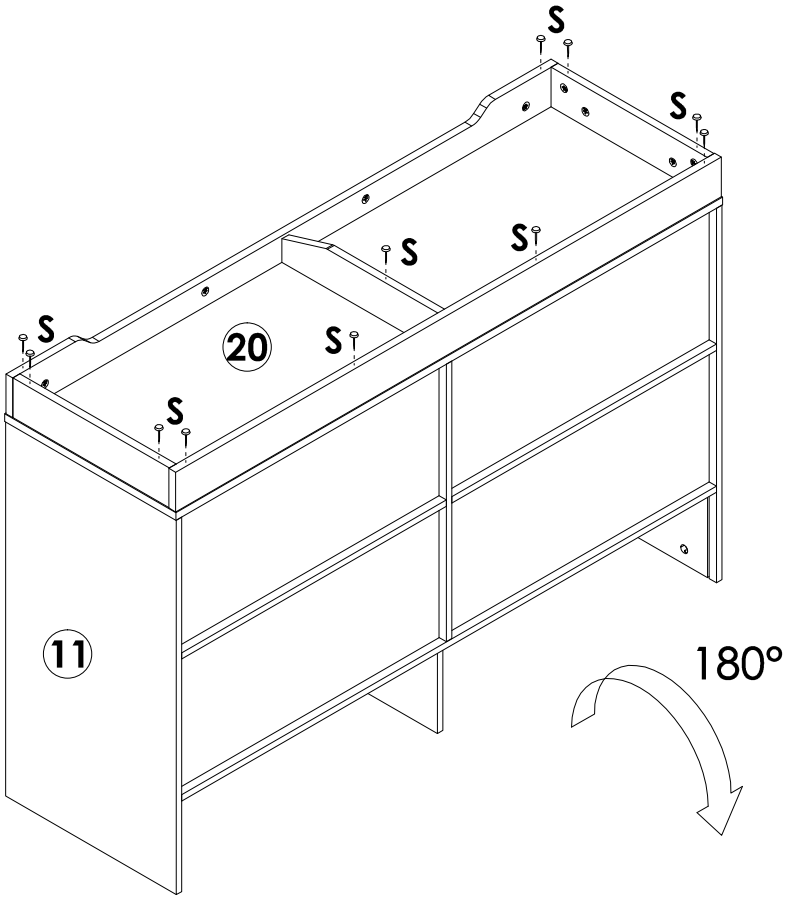

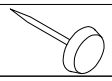	**S** x 11PCS

STEP 25

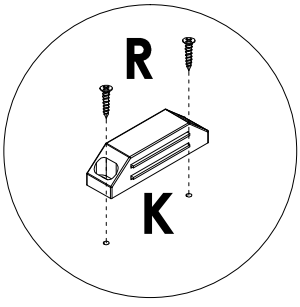

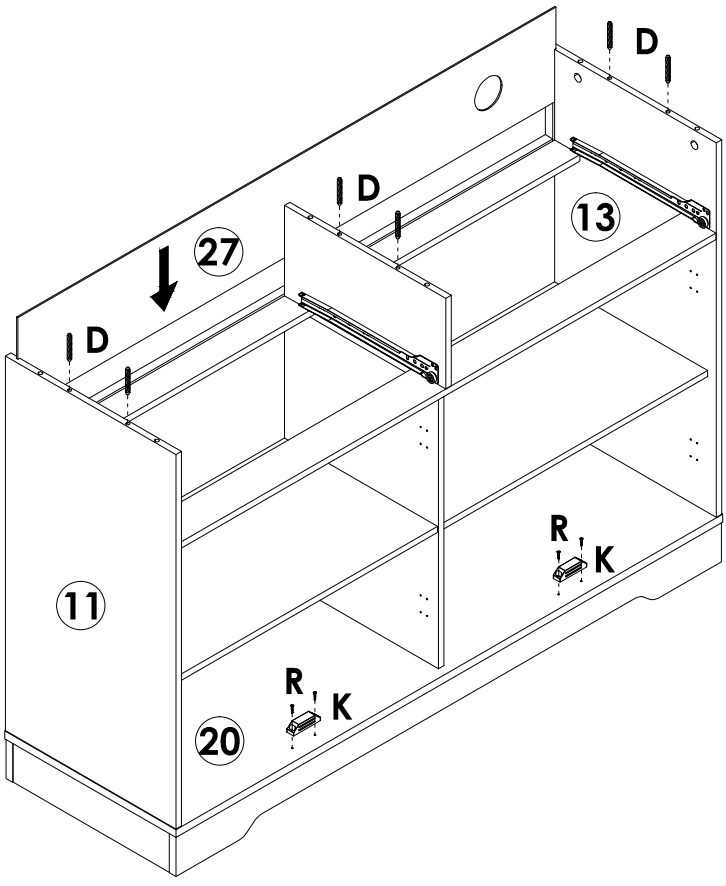

	**D** x 6PCS
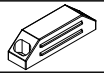	**K** x 2PCS
	**R** x 4PCS

STEP 26

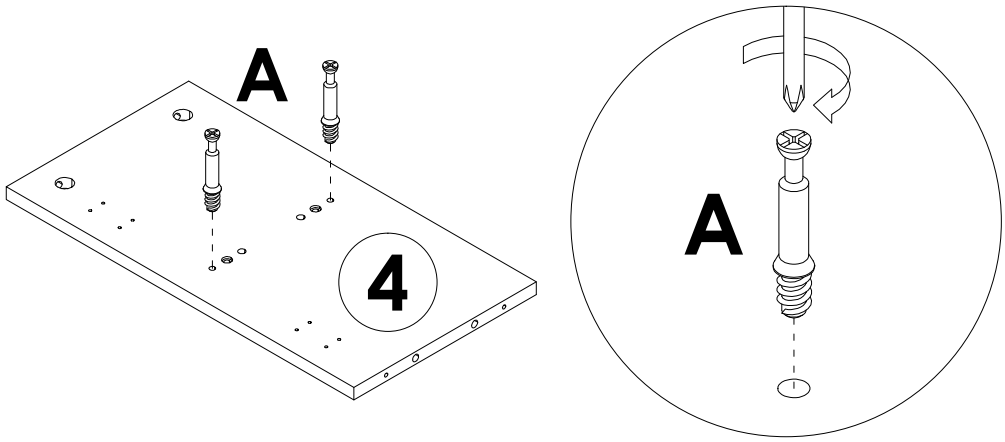

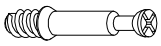	**A** x 2PCS

STEP 27

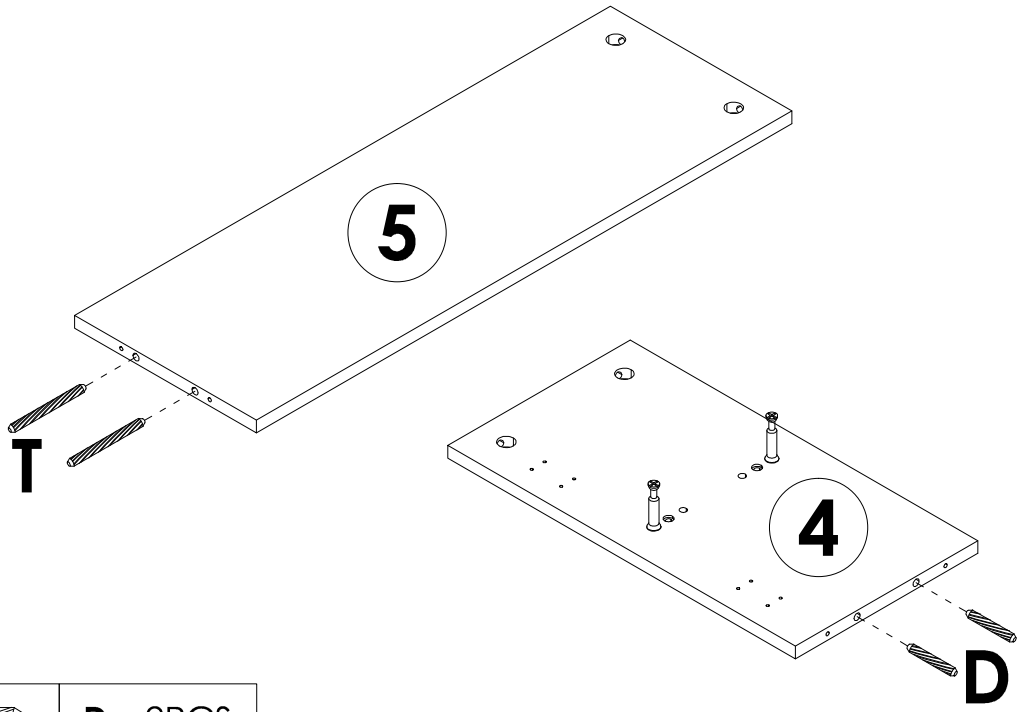

	**D** x 2PCS
	**T** x 2PCS

STEP 28

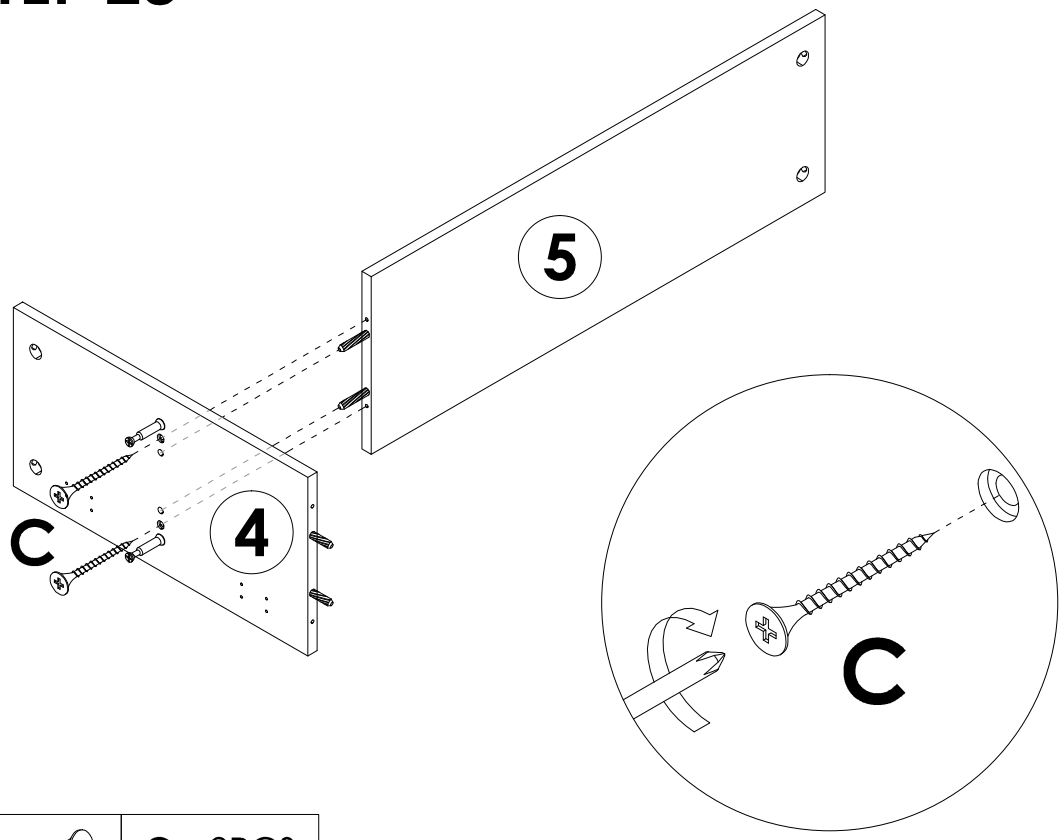

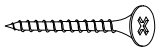

C x 2PCS

STEP 29

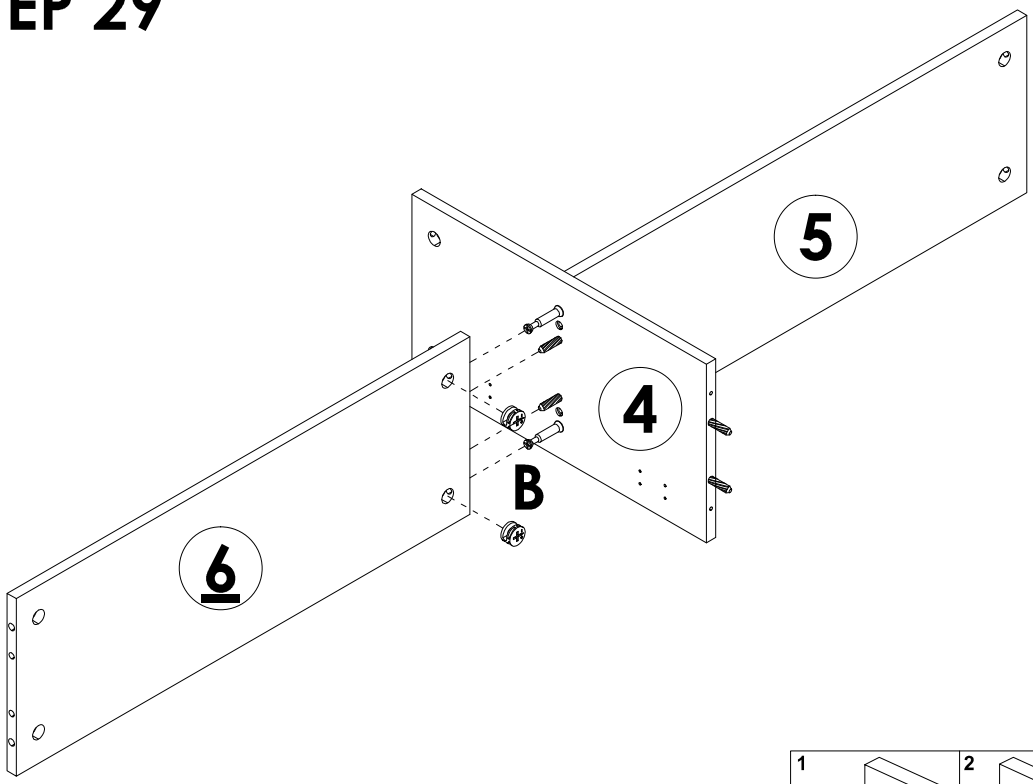

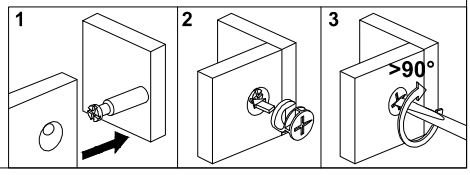



B x 2PCS

STEP 30

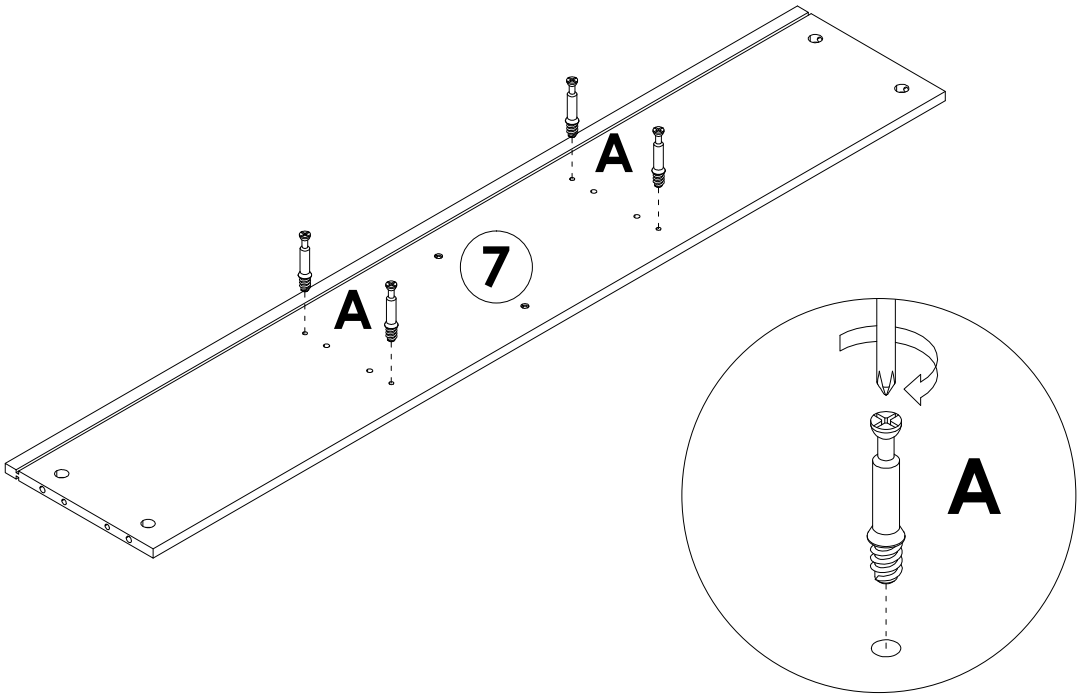

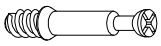

A x 4PCS

STEP 31

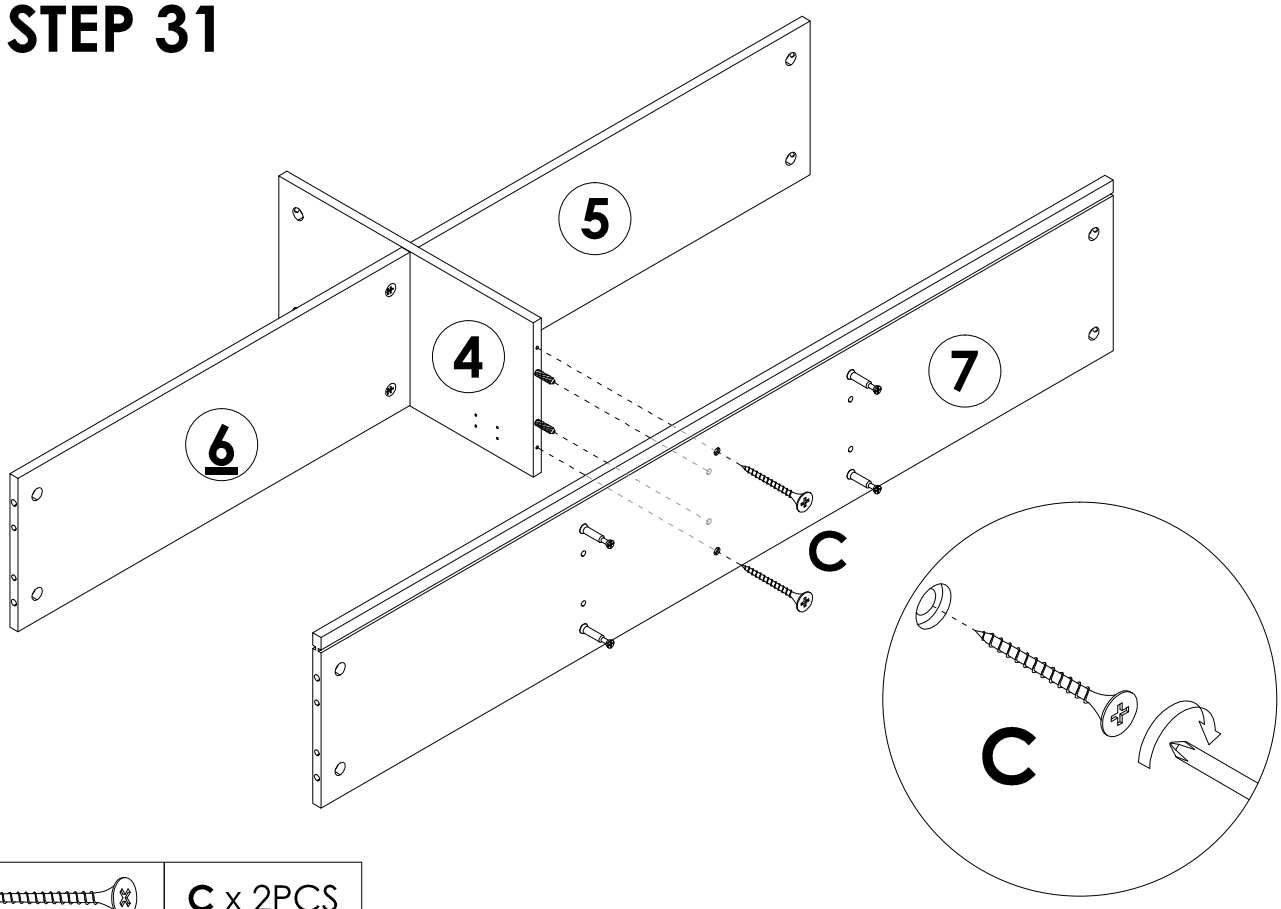

C x 2PCS

STEP 32

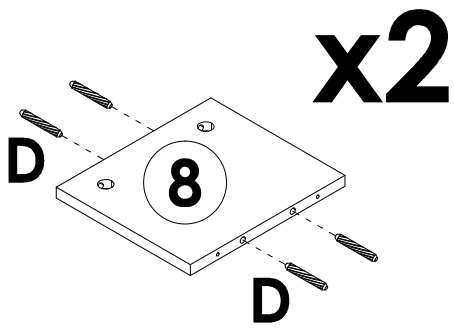

	**D** x 8PCS

STEP 33

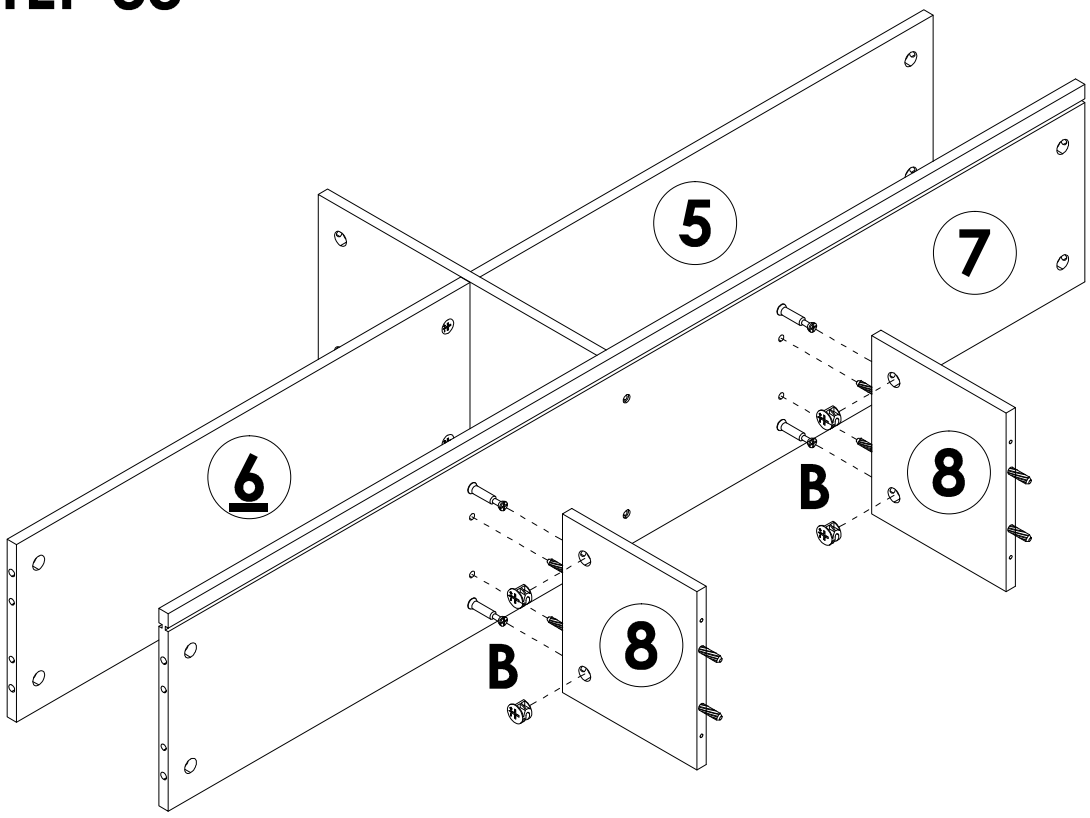

	**B** x 4PCS

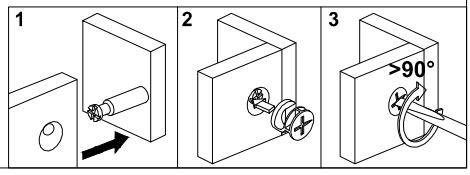

STEP 34

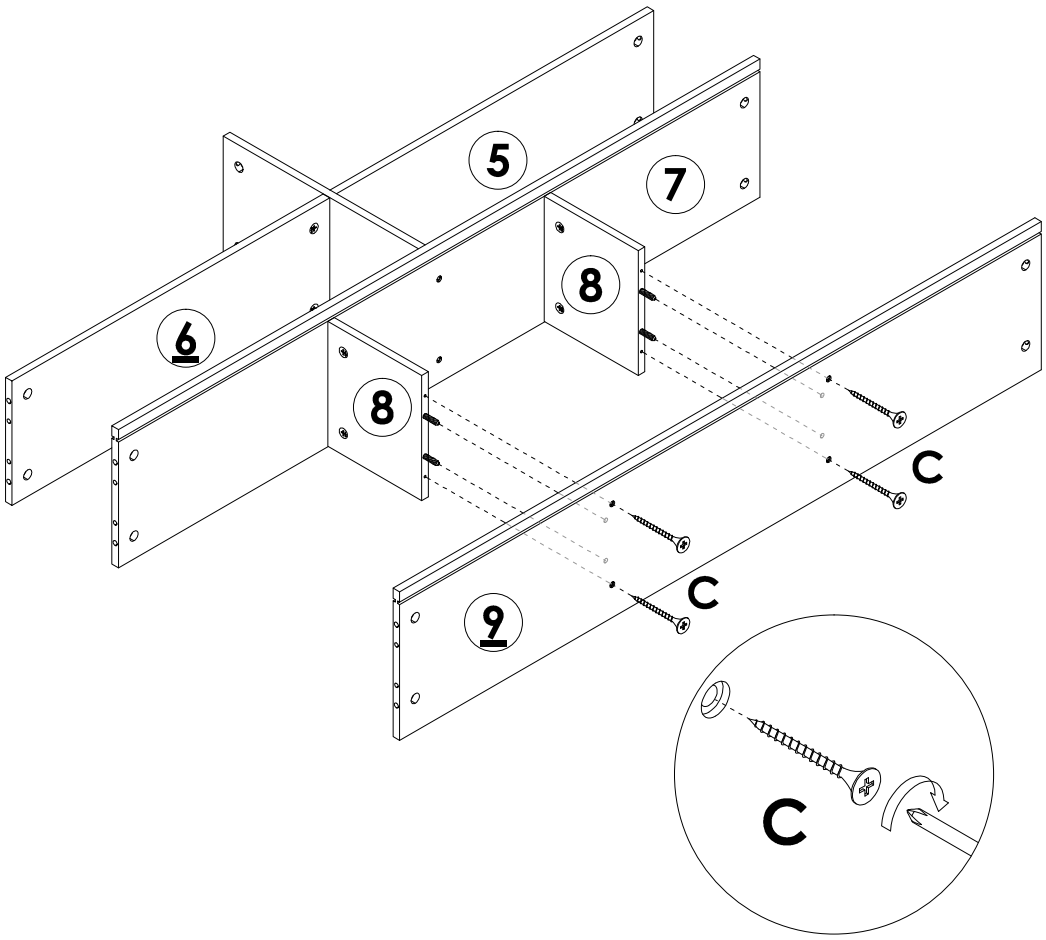

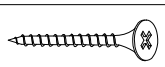

C x 4PCS

STEP 35

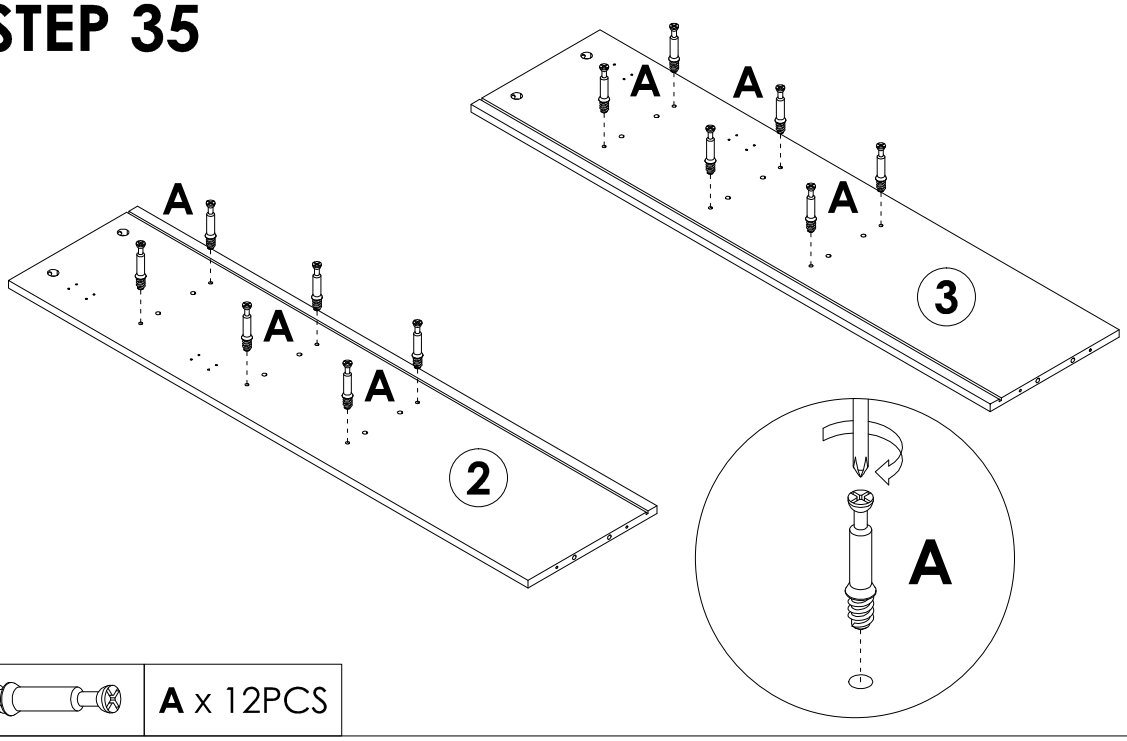

A x 12PCS

STEP 36

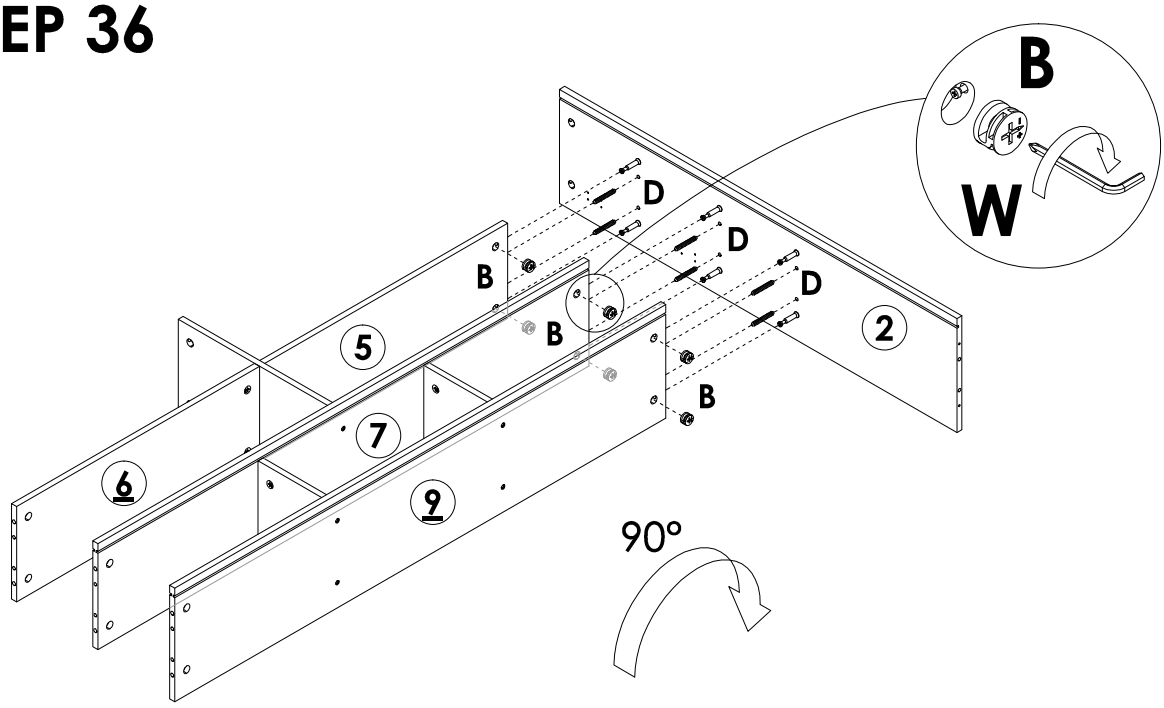

	**B** x 6PCS
	**D** x 6PCS
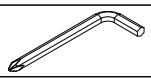	**W** x 1PC

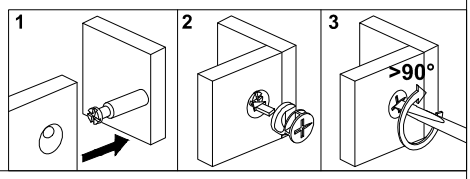

STEP 37

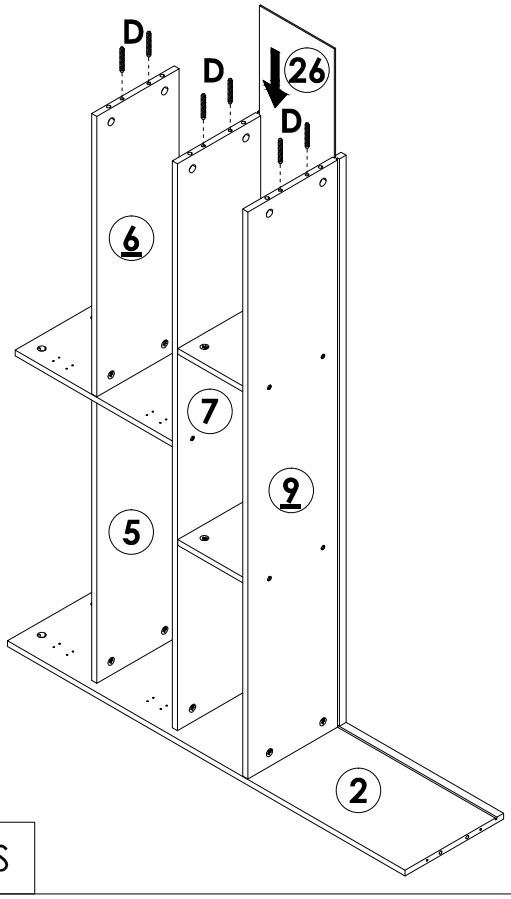

	**D** x 6PCS

STEP 38

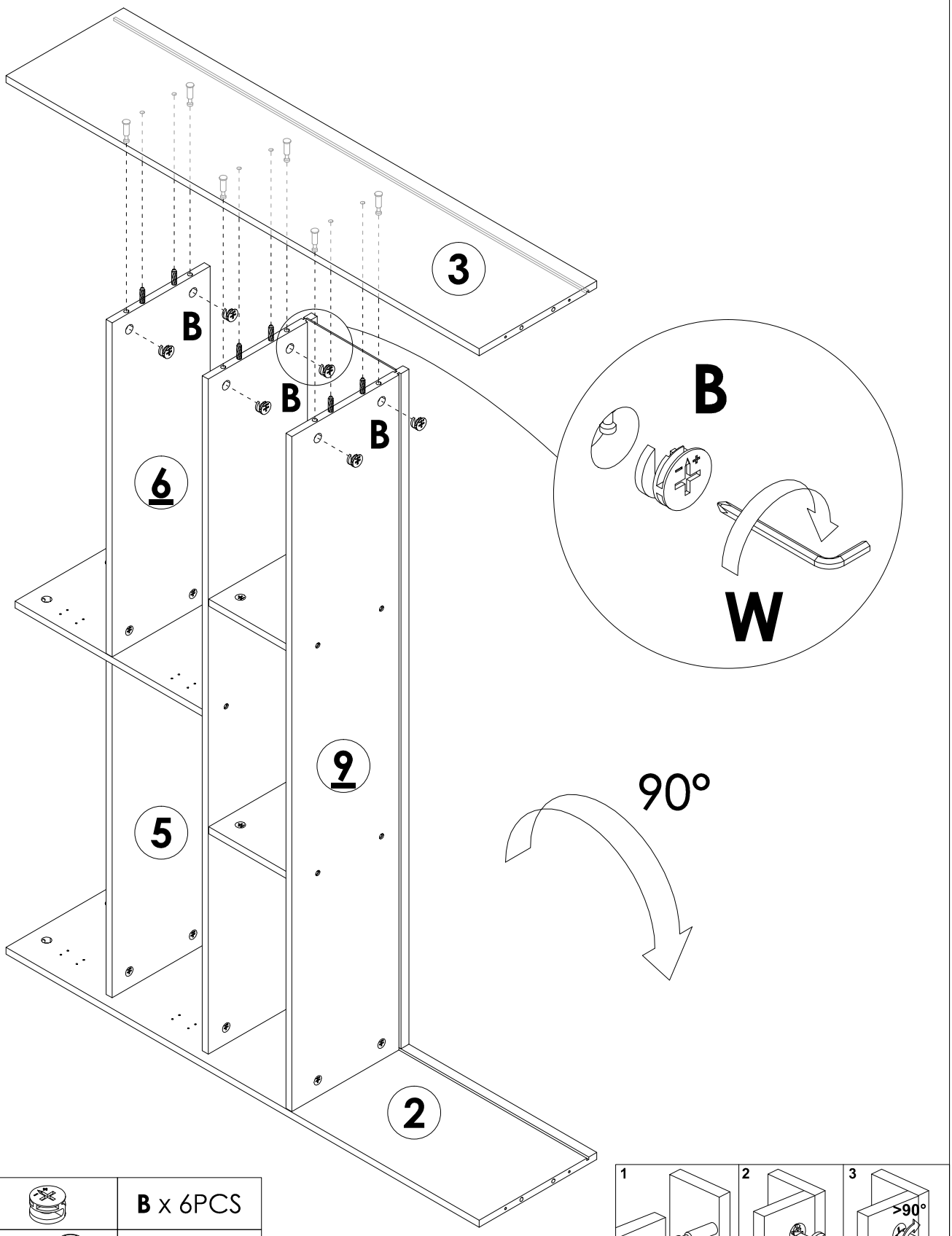

	B x 6PCS
	W x 1PC

STEP 39

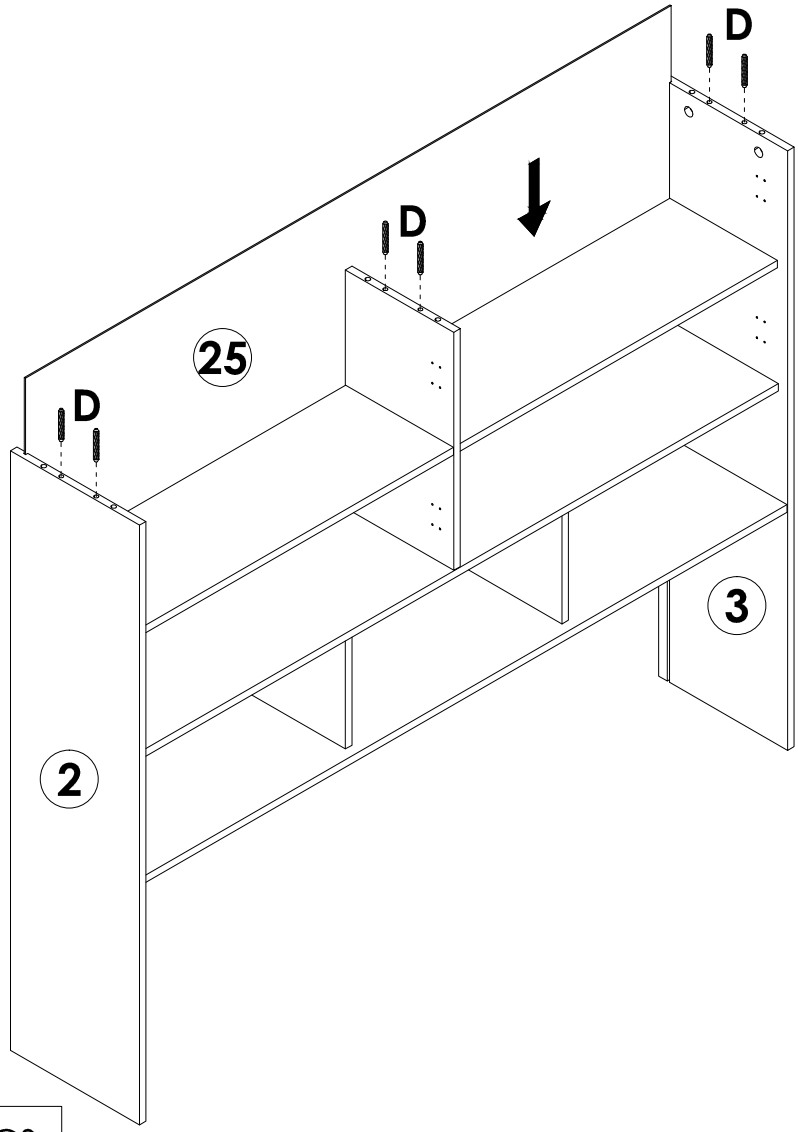

	**D** x 6PCS

STEP 40

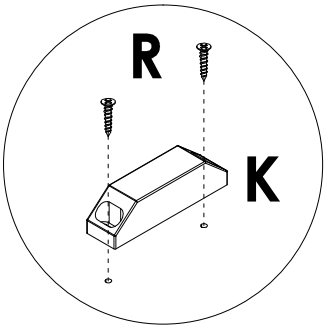

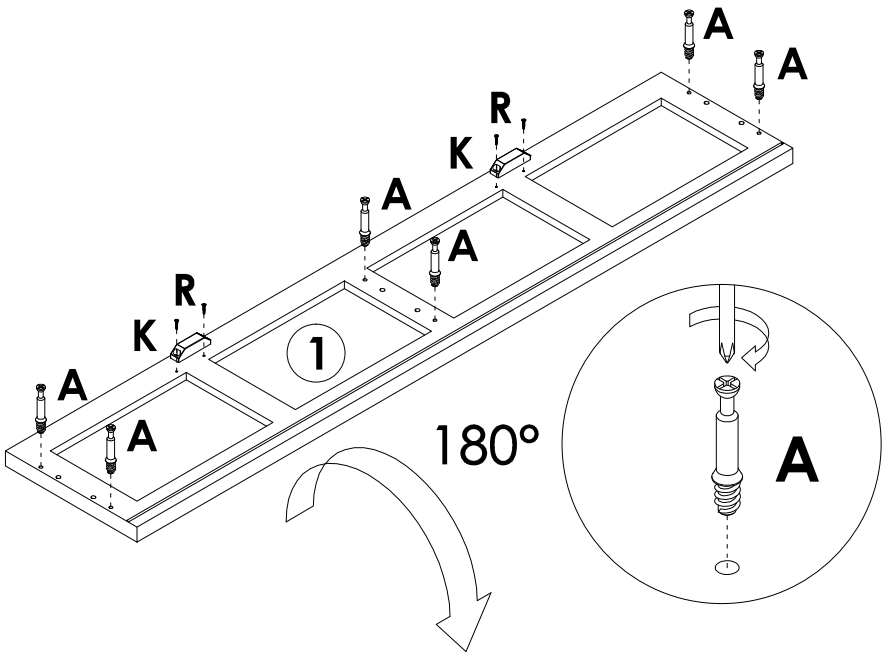

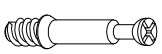	**A** x 6PCS
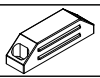	**K** x 2PCS
	**R** x 4PCS

STEP 41

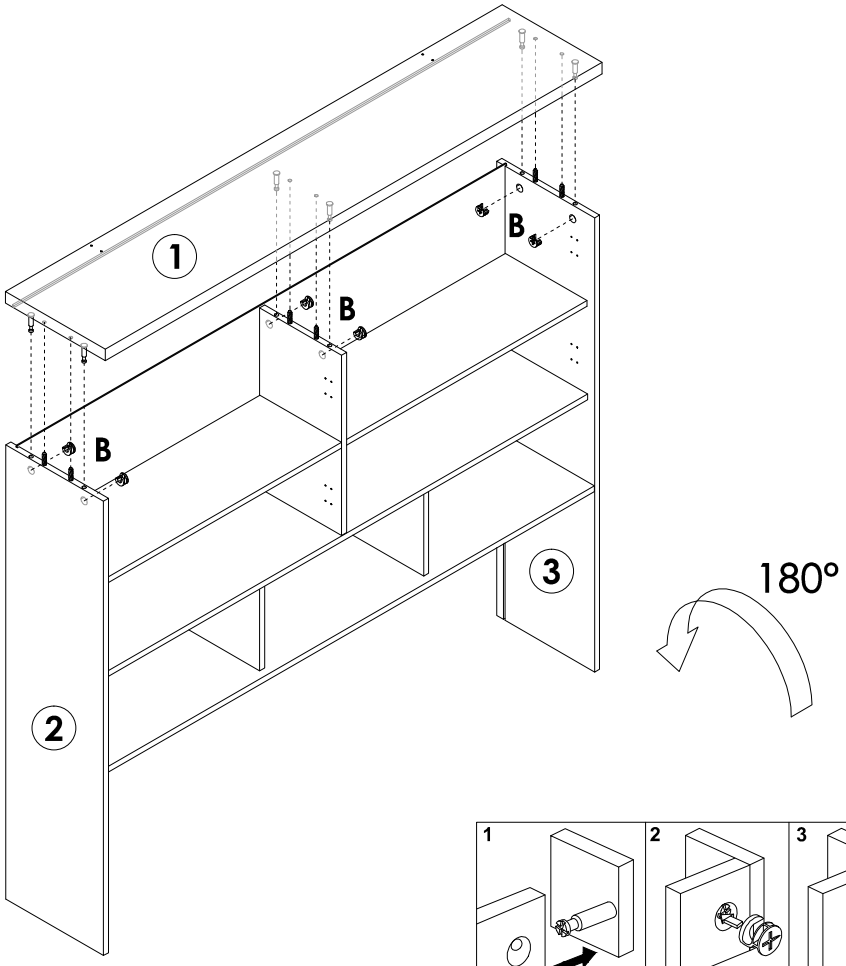



B x 6PCS

STEP 42

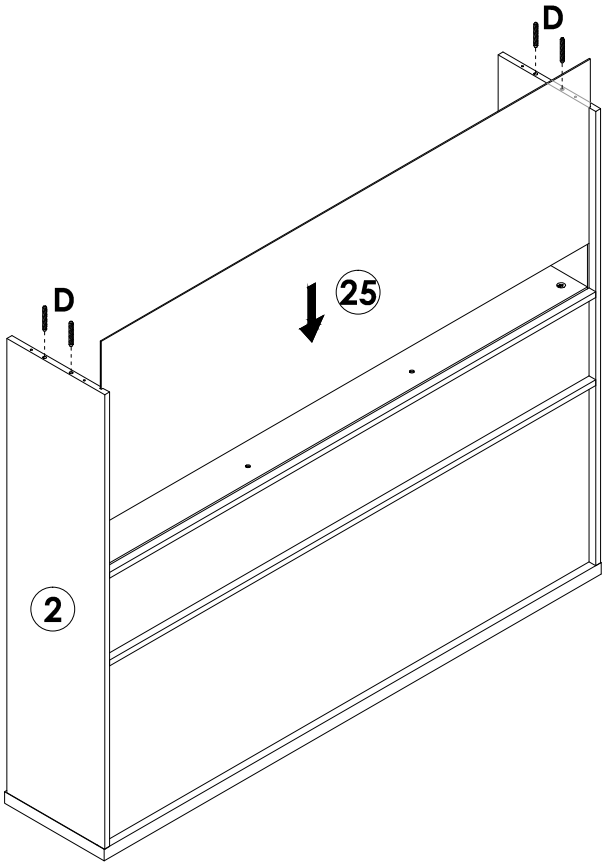



D x 4PCS

STEP 43

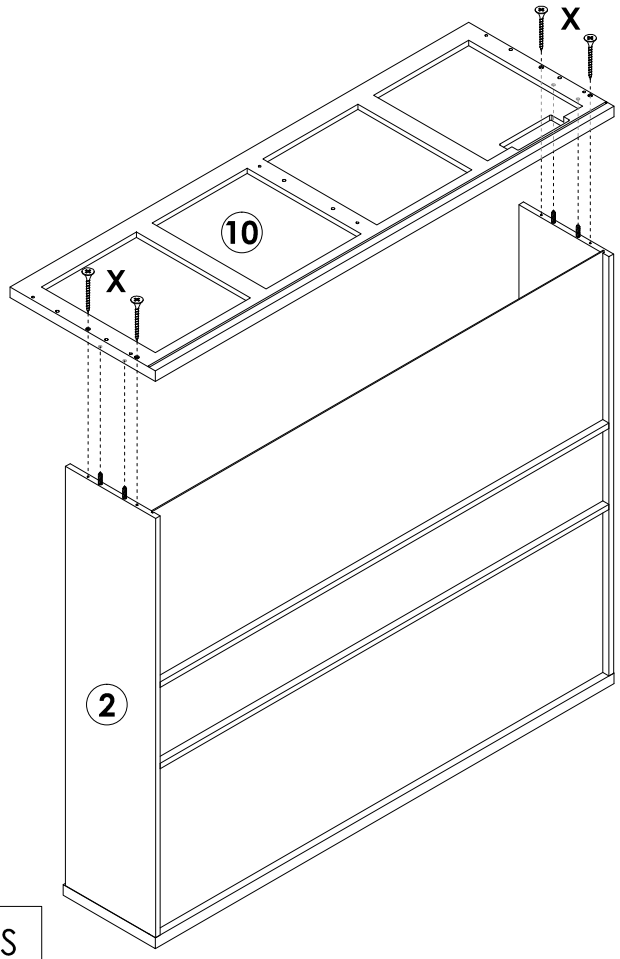

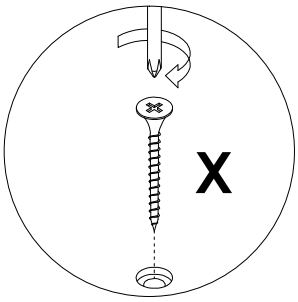

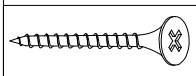

X x 4PCS

STEP 44

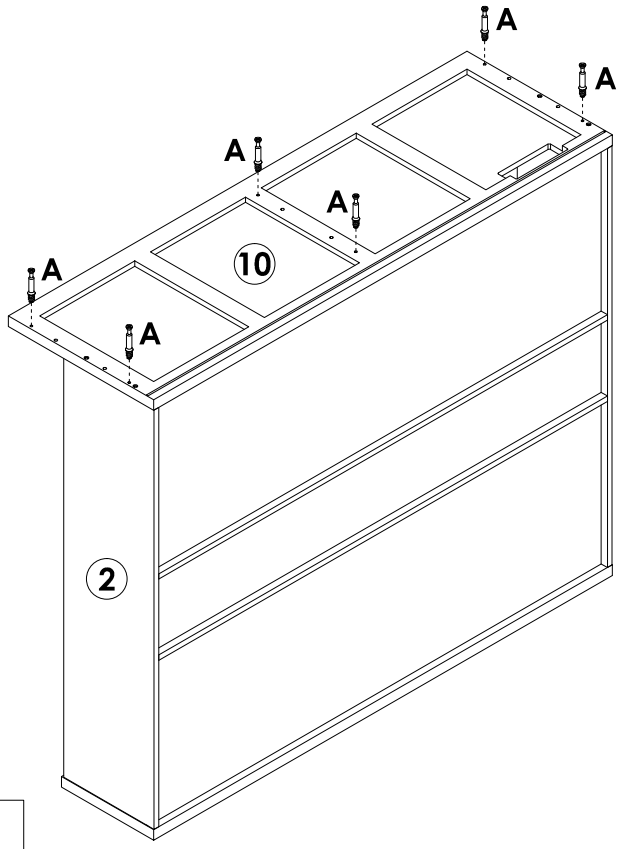

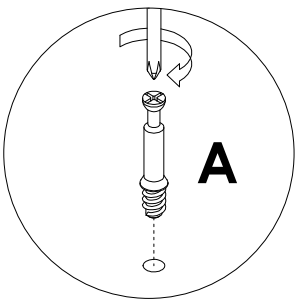

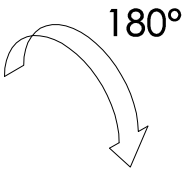

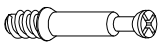

A x 6PCS

STEP 45

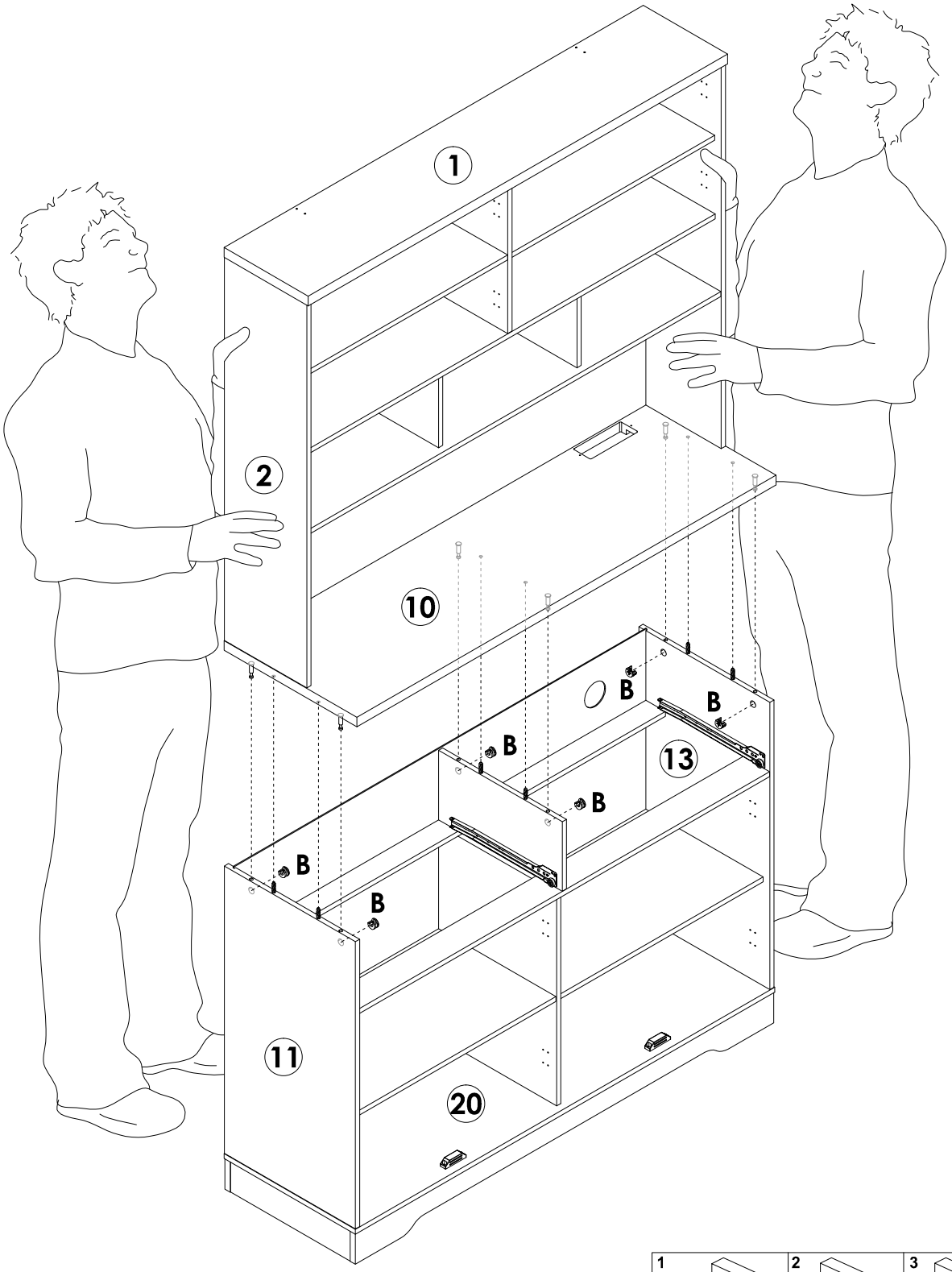

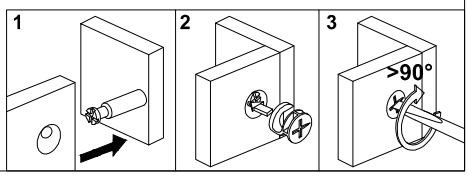



B x 6PCS

STEP 46

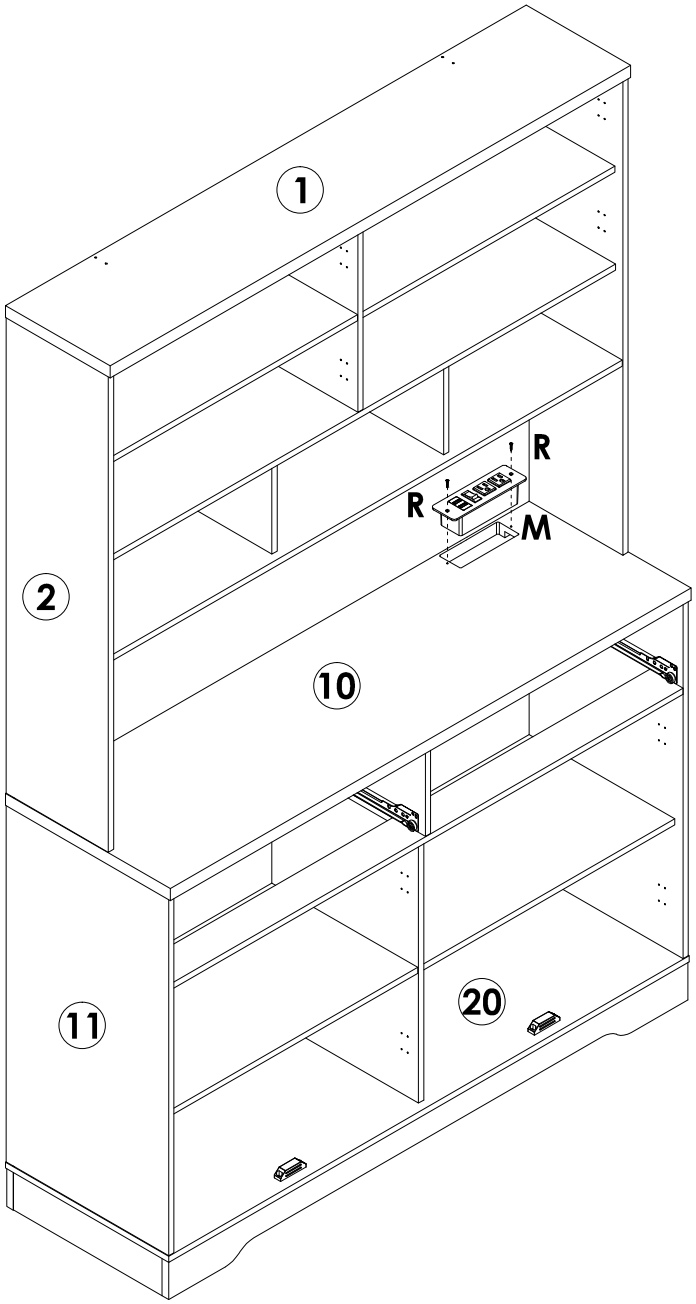

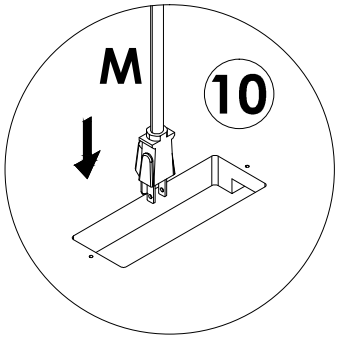

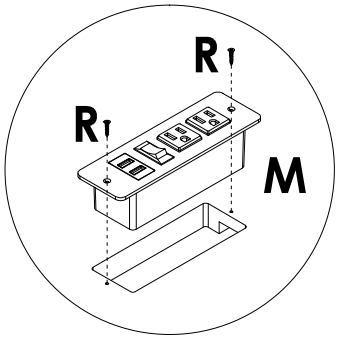

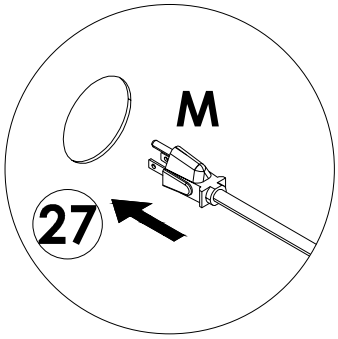

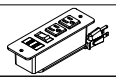	**M** x 1PC
	**R** x 2PCS

STEP 47

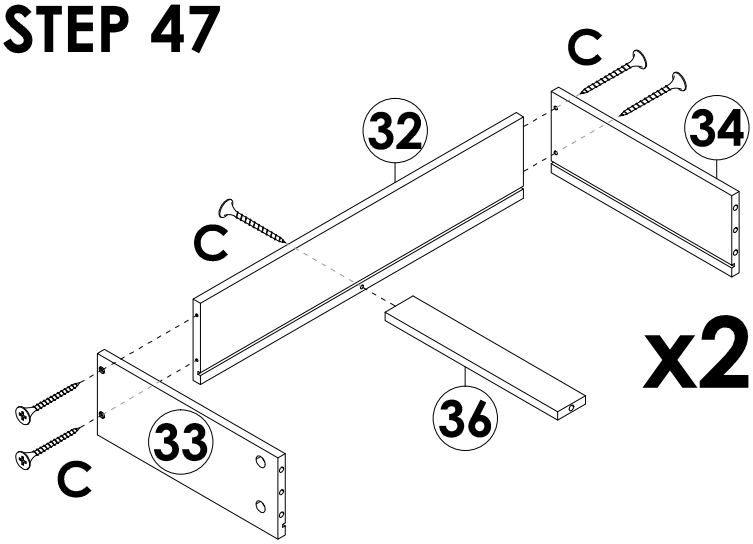

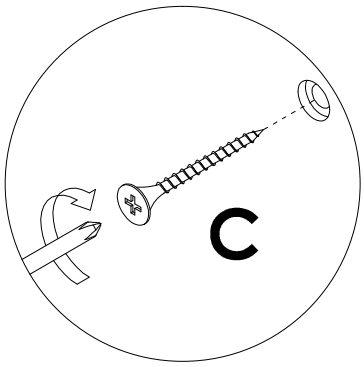

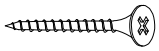	**C** x 10PCS

STEP 48

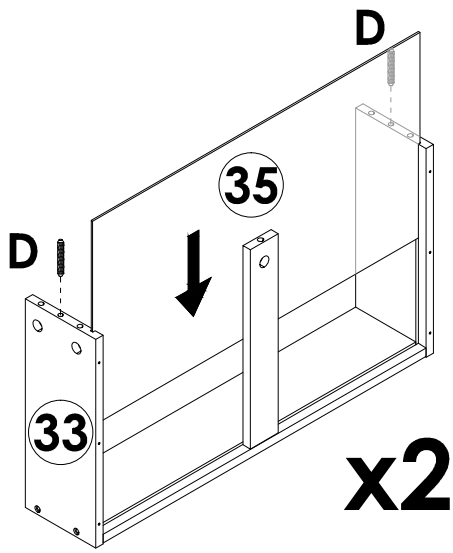

	**D** x 4PCS

STEP 49

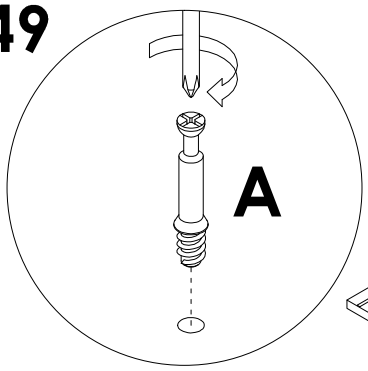

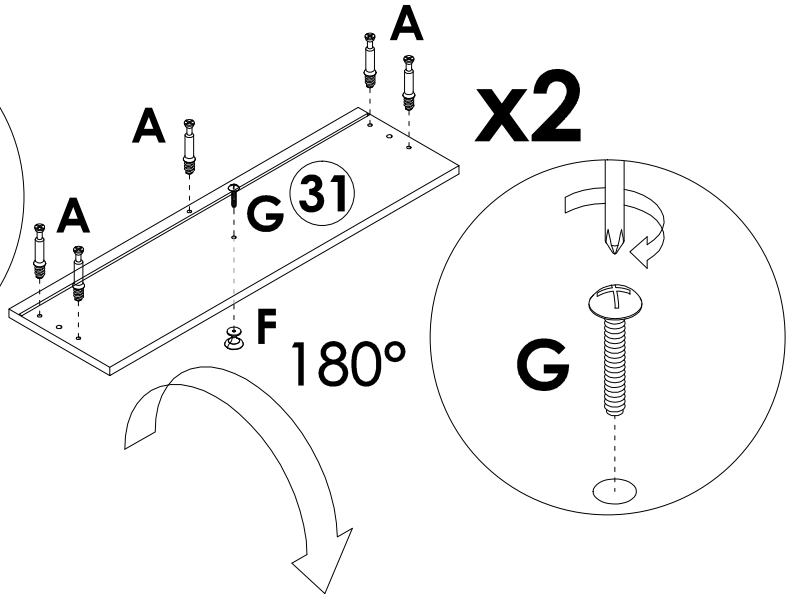

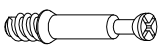	**A** x 10PCS
	**F** x 2PCS
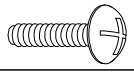	**G** x 2PCS

STEP 50

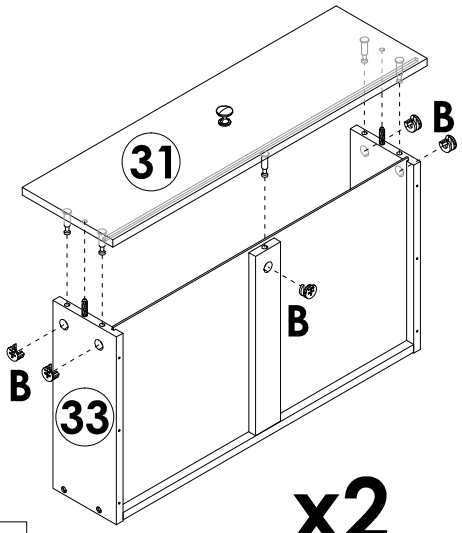

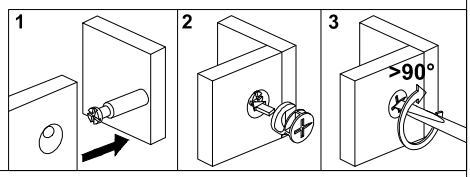

	**B** x 10PCS

STEP 51

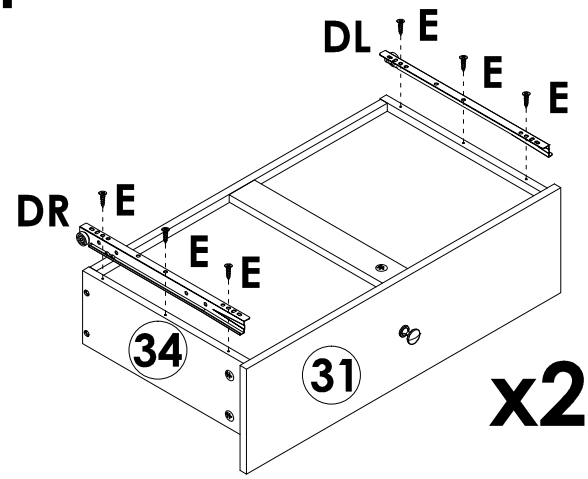

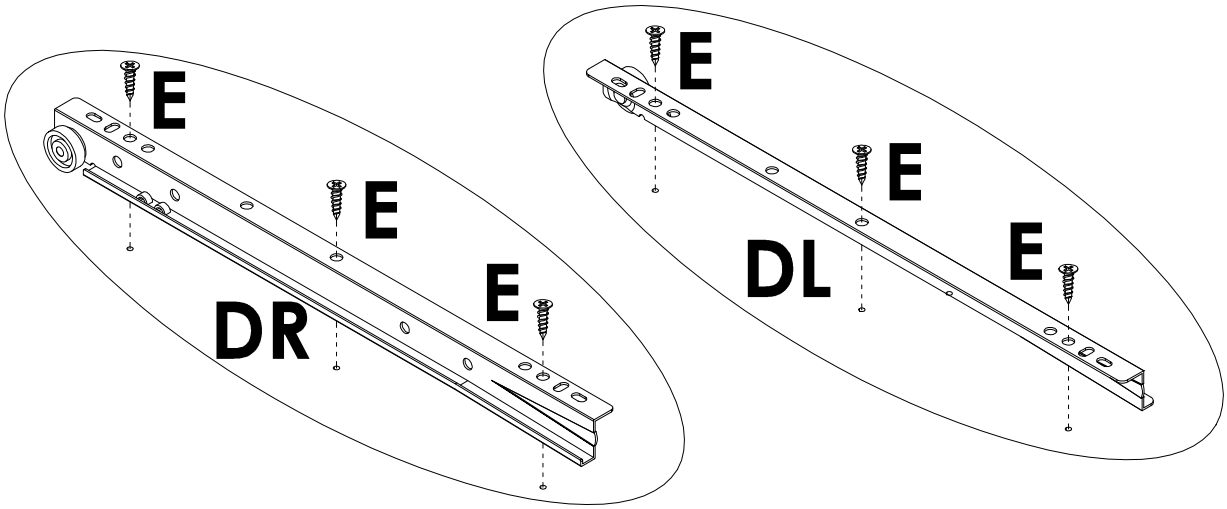

	**E** x 12PCS
	**DL** x 2PCS
	**DR** x 2PCS

STEP 52

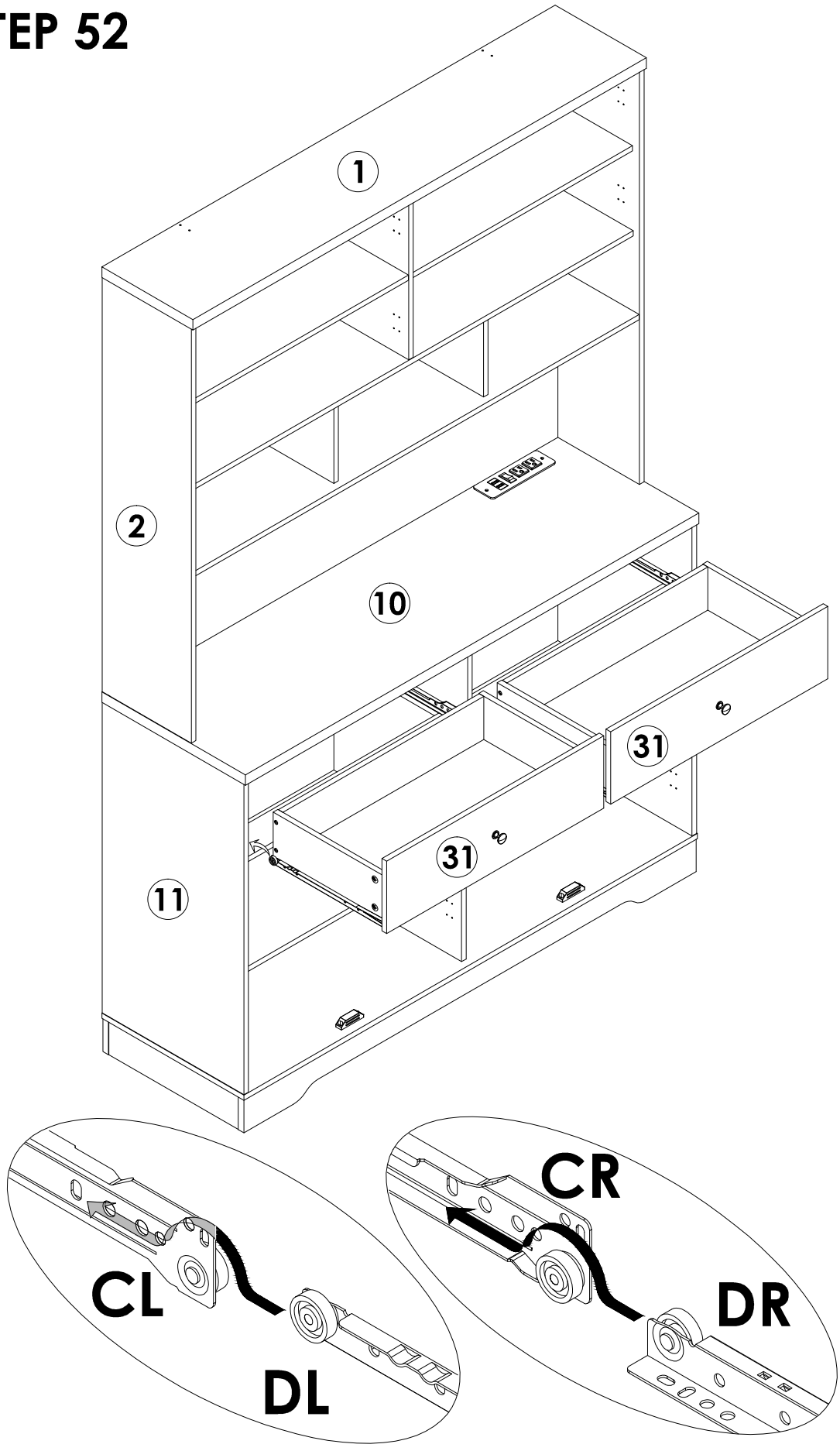

STEP 53

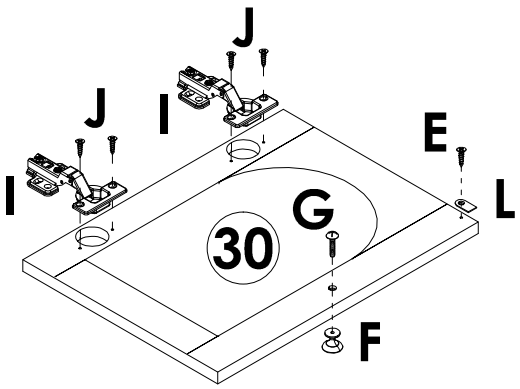

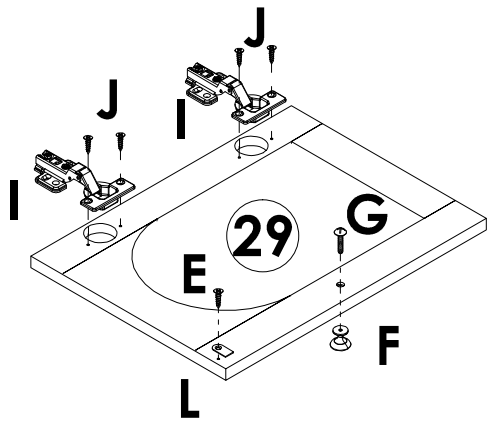

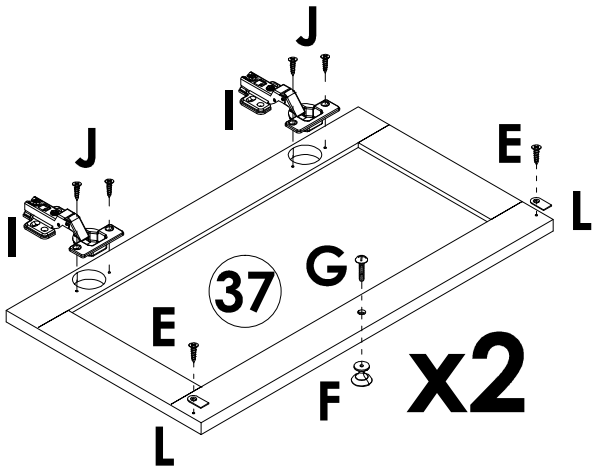

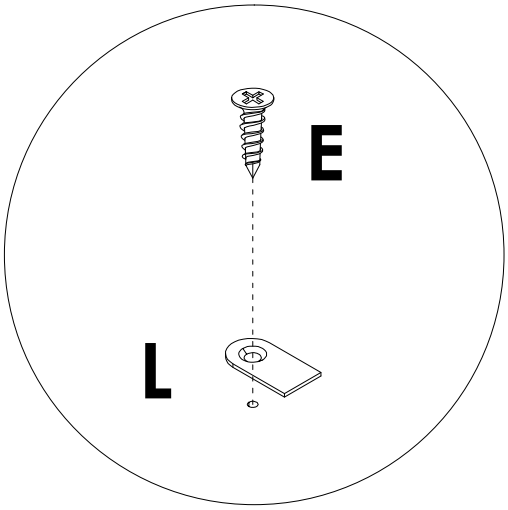

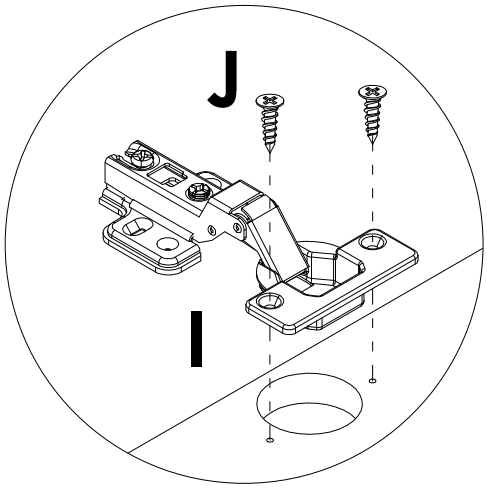

	**E** x 6PCS
	**F** x 4PCS
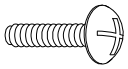	**G** x 4PCS
	**I** x 8PCS
	**J** x 16PCS
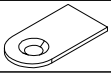	**L** x 6PCS

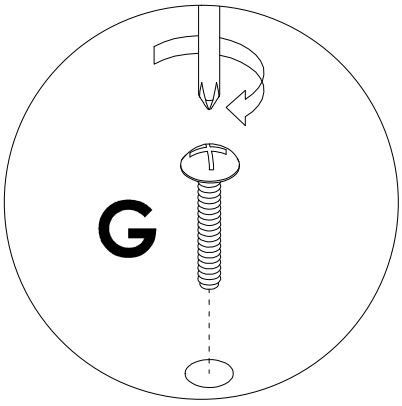

STEP 54

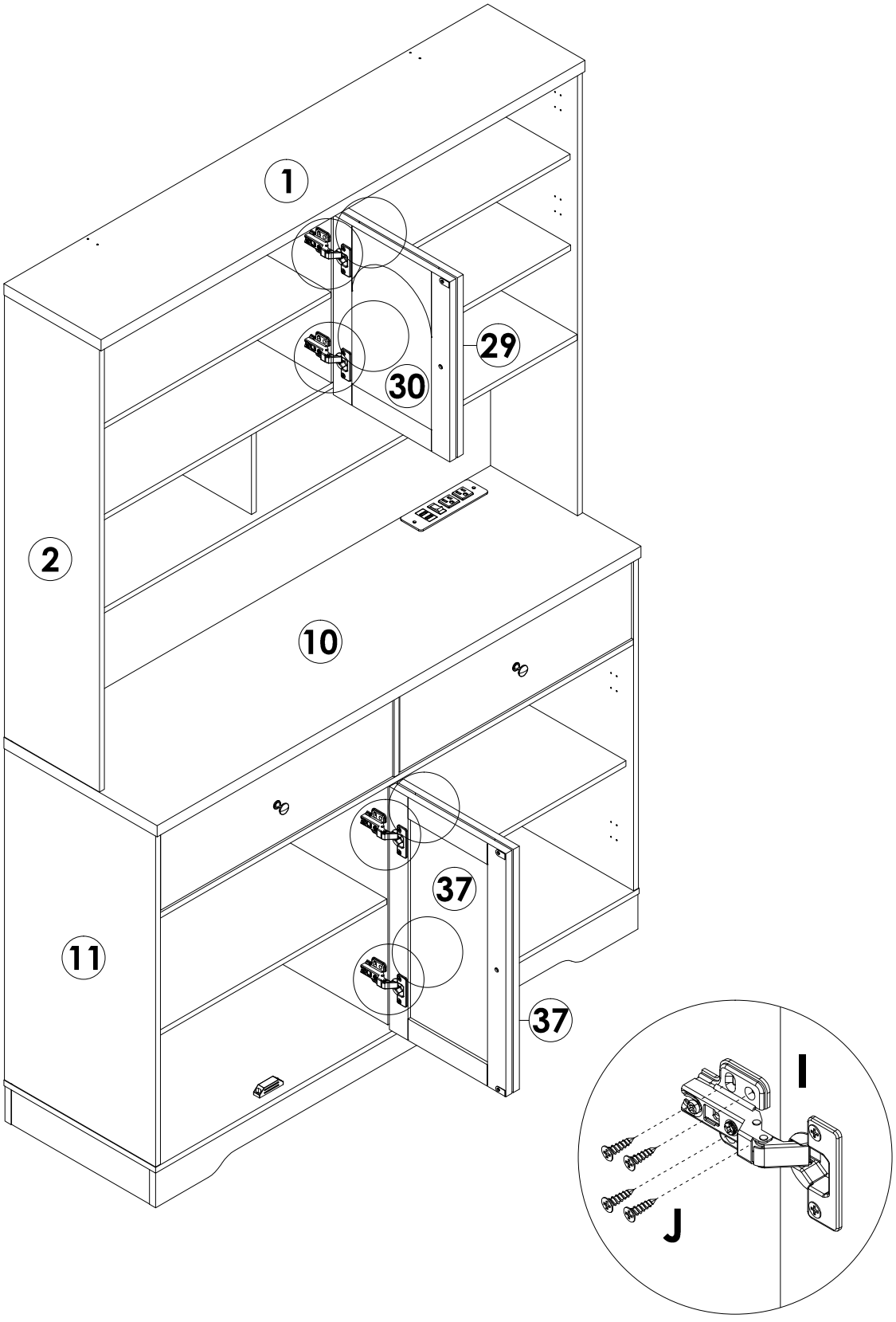

	**J** x 32PCS

STEP 55

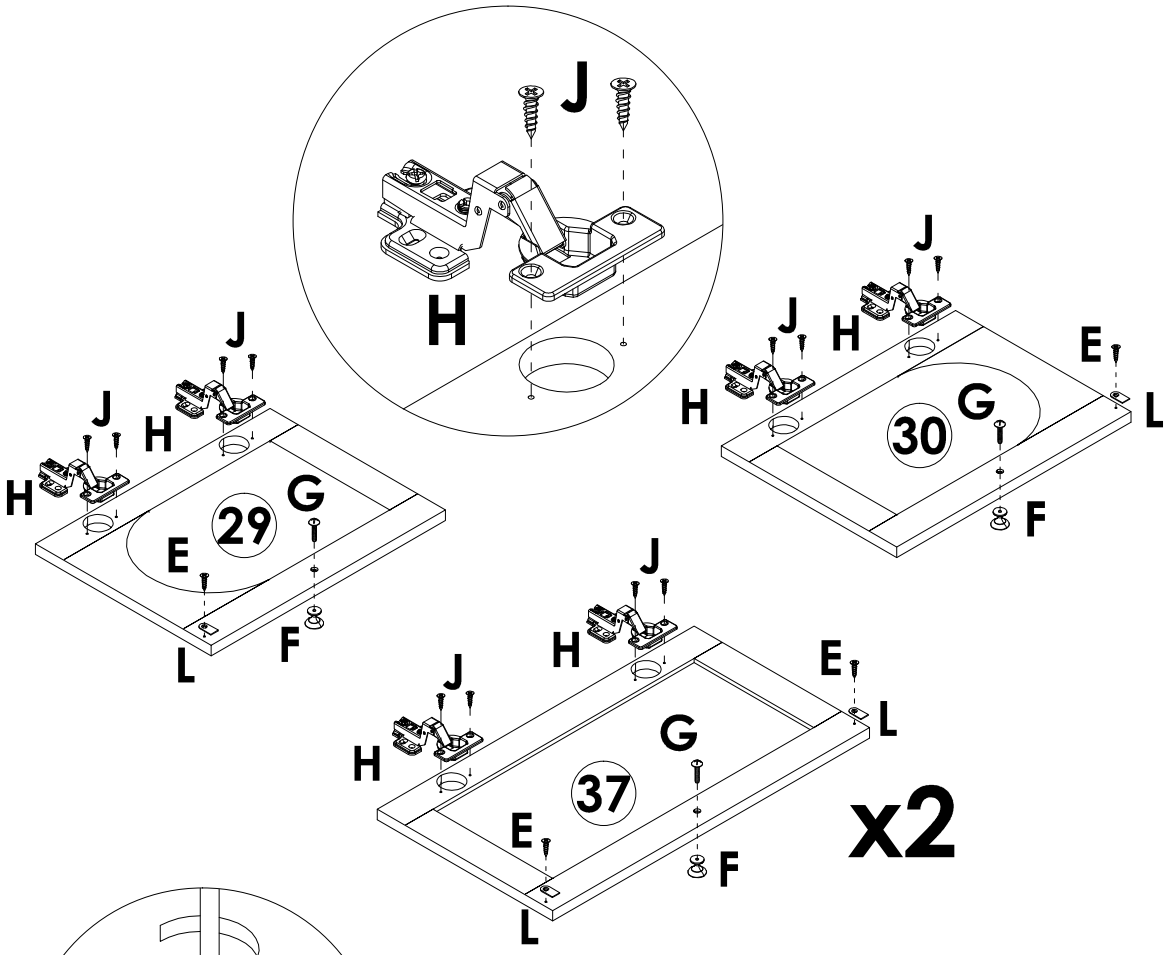

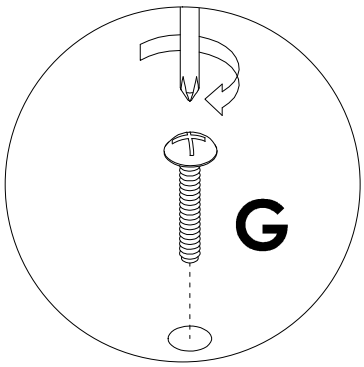

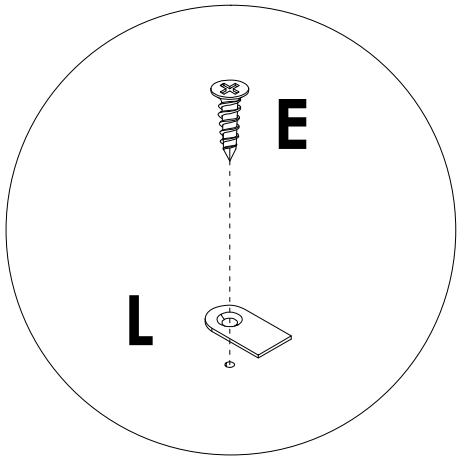

	**E** x 6PCS
	**F** x 4PCS
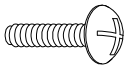	**G** x 4PCS
	**H** x 8PCS
	**J** x 16PCS
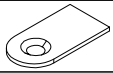	**L** x 6PCS

STEP 56

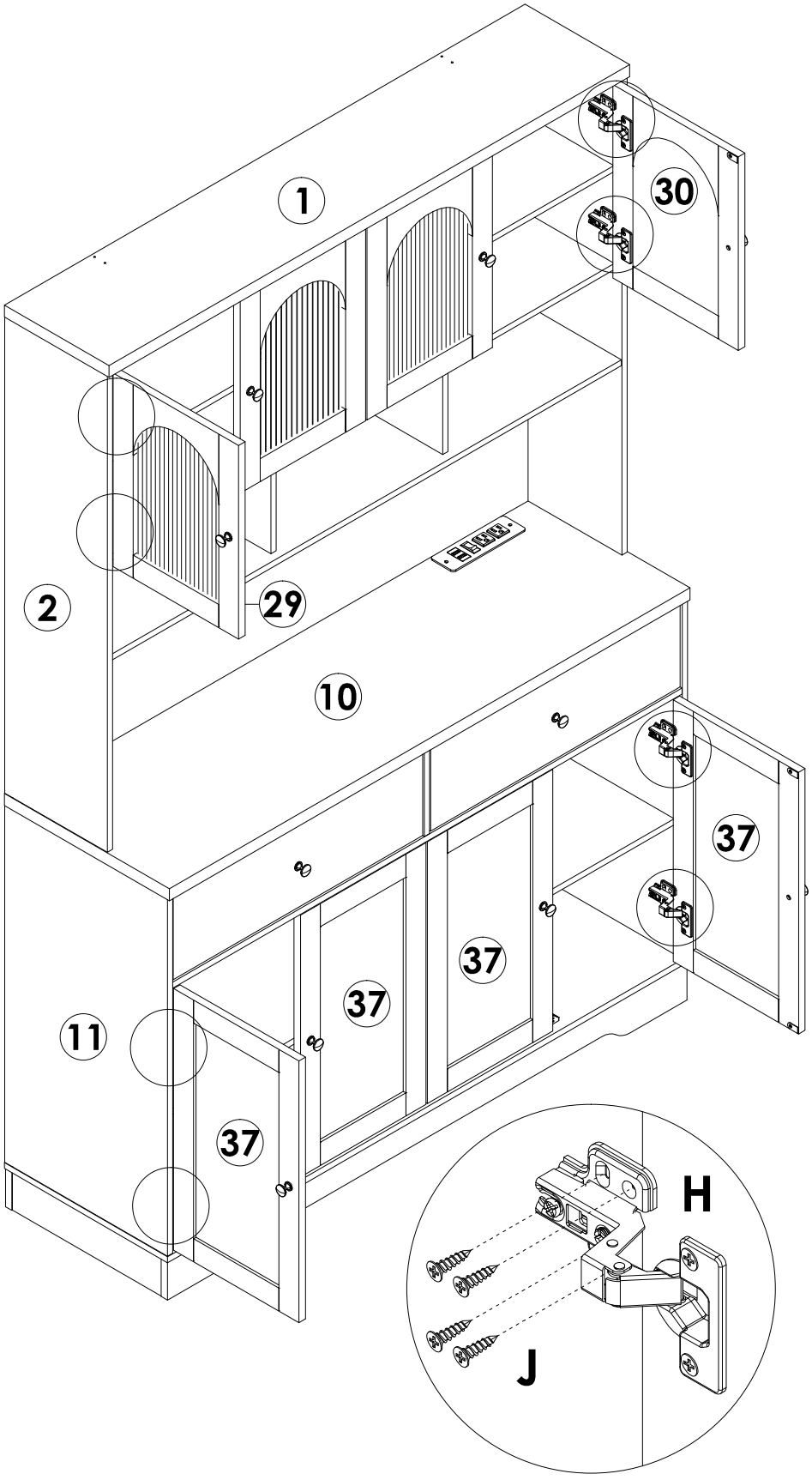

	**J** x 32PCS

STEP 57

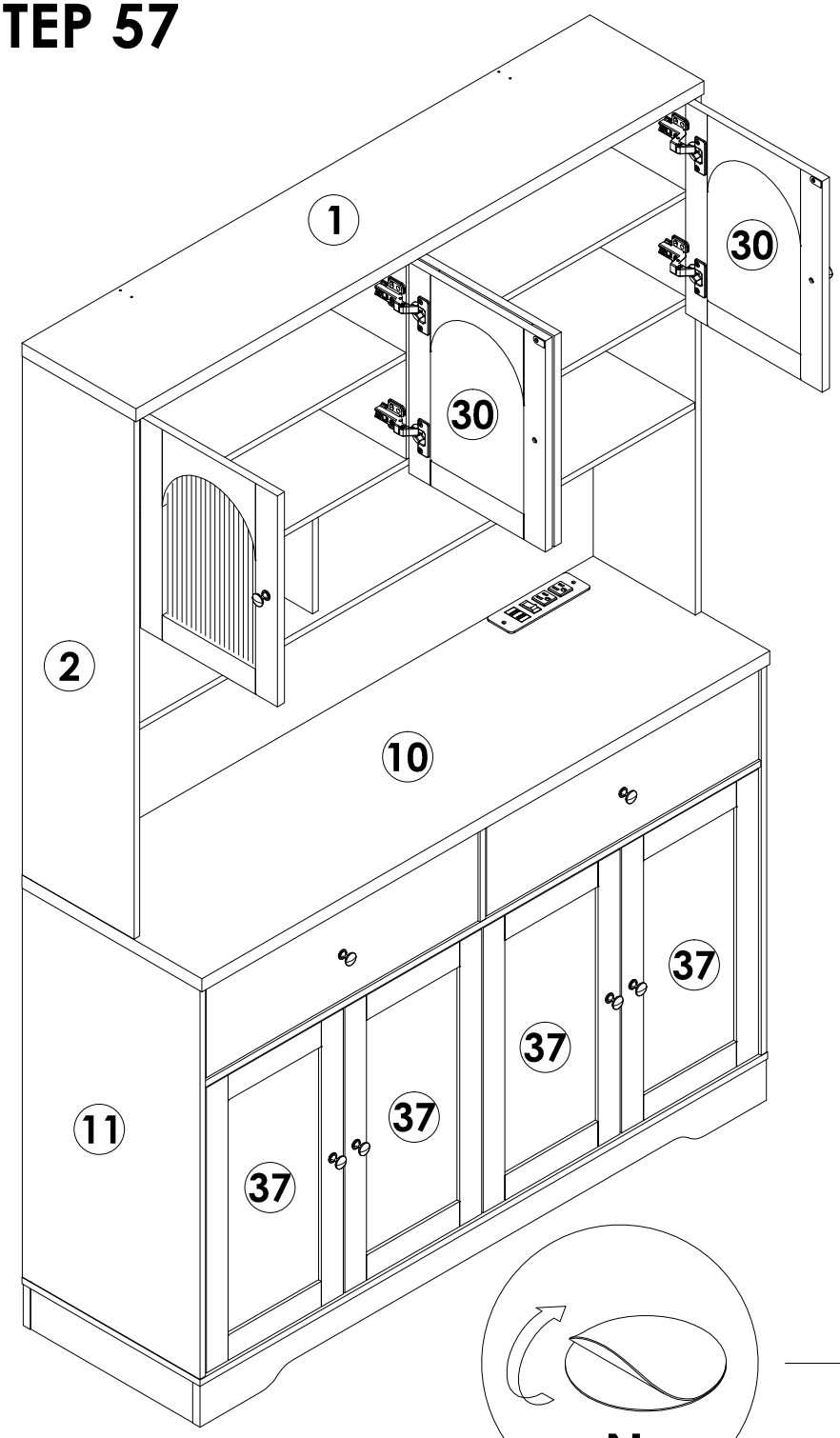

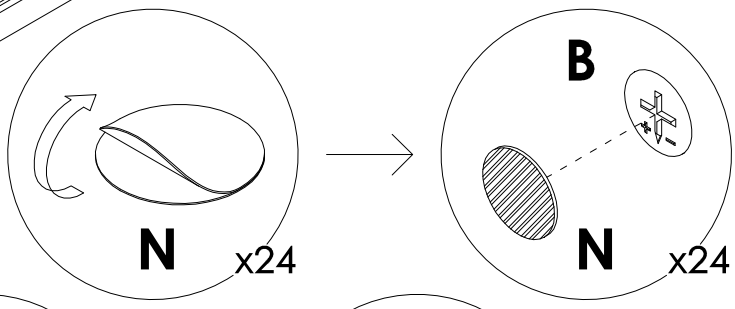

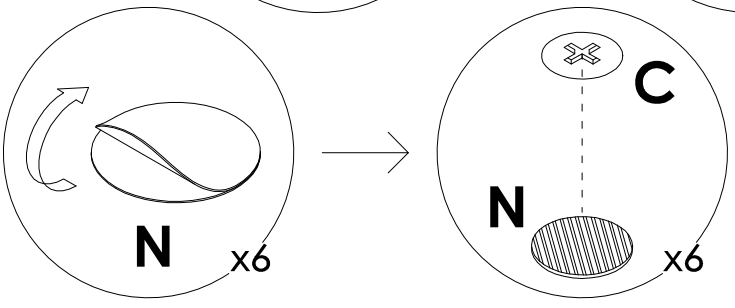

	**N** x 30PCS

STEP 58

Lock the long side of the " **P** " L-shaped metal plate to the ① board with the " **Q** "short screw.

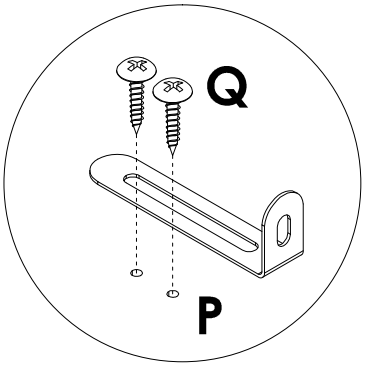

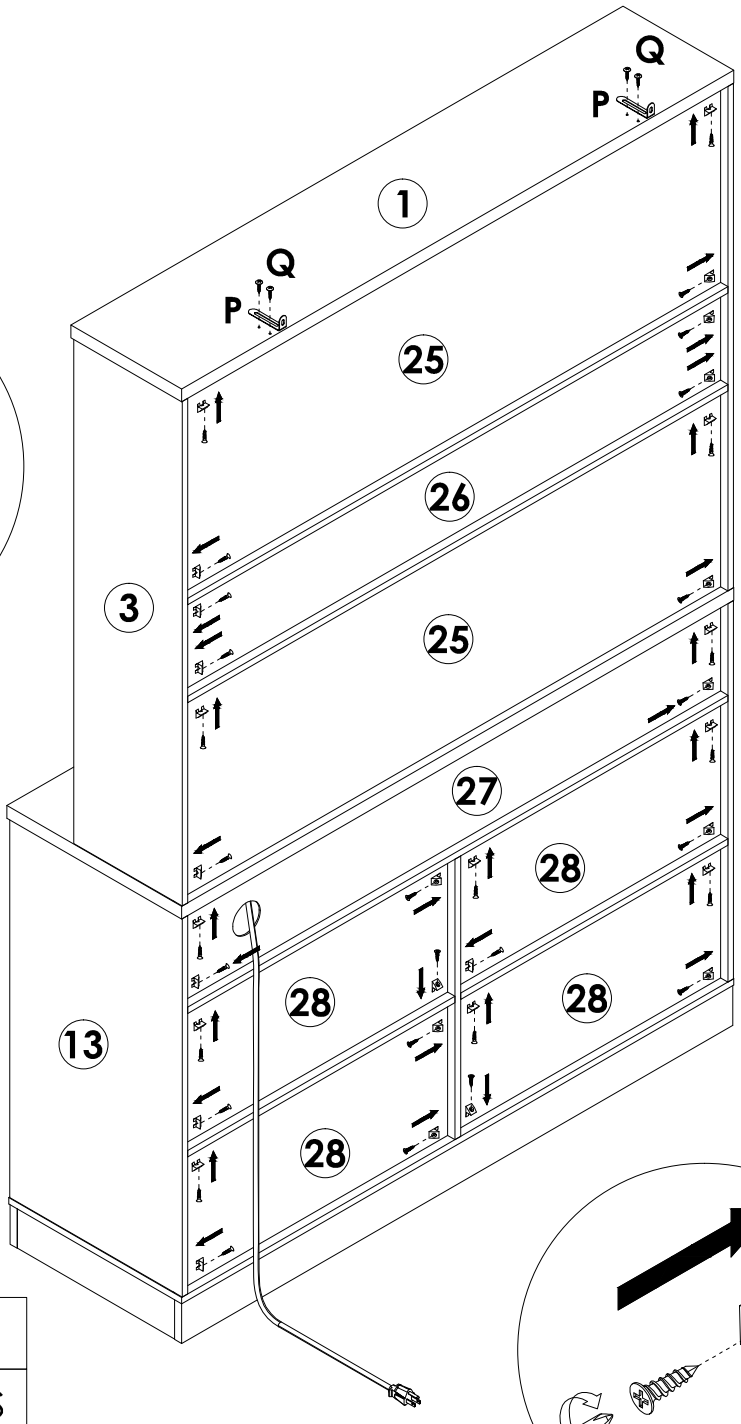

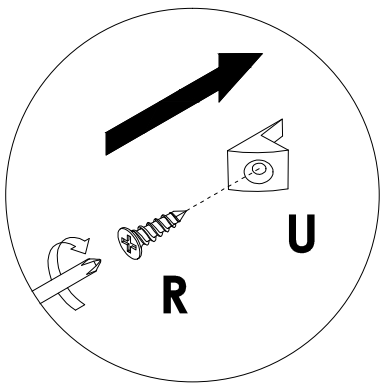

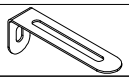	**P** x 2PCS
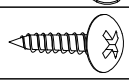	**Q** x 4PCS
	**R** x 32PCS
	**U** x 32PCS

STEP 59

Drill 2 holes on the wall at the required position for anti-falling device installation.

WALL





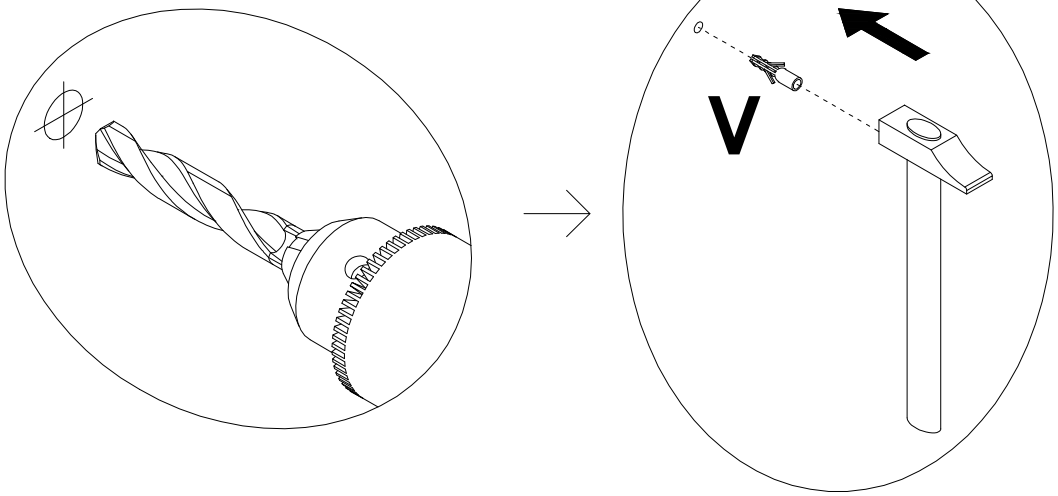

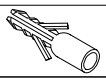	**V** x 2PCS

STEP 60

Move the cabinet to the required position, use the " **C** " long screw to fix the cabinet to the wall.

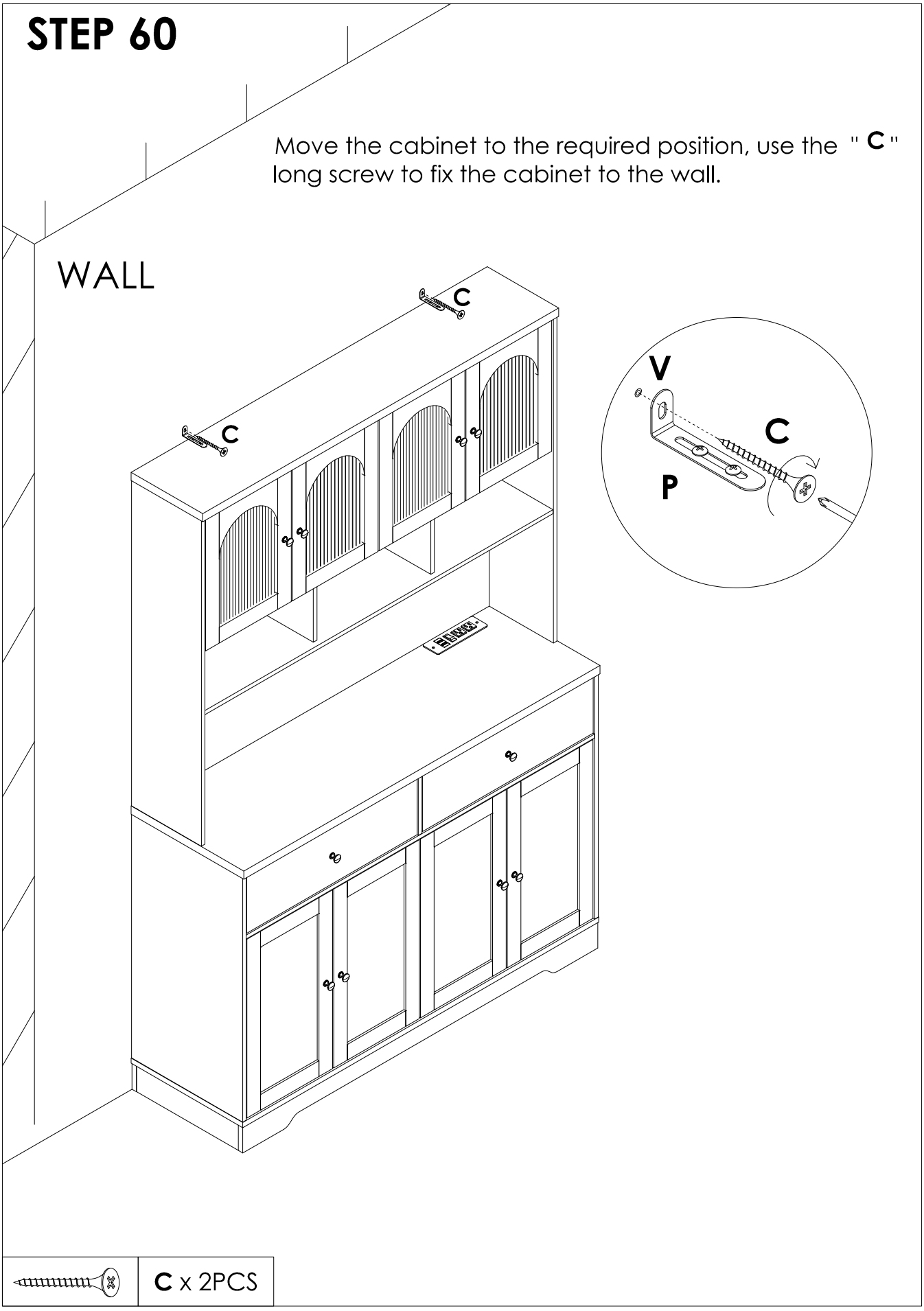

	C x 2PCS

The ways to adjust the door

- Before adjusting the hinge, please check whether the cabinet is skewed.
- If the skew can not be repaired, please remove the anti-tipping device first, then adjust the cabinet to vertical position.
- Please adjust the hinge with the door open.
- Please operate it with more than 2 people, one person holds the door and the other one adjusts the screw.

Components Name

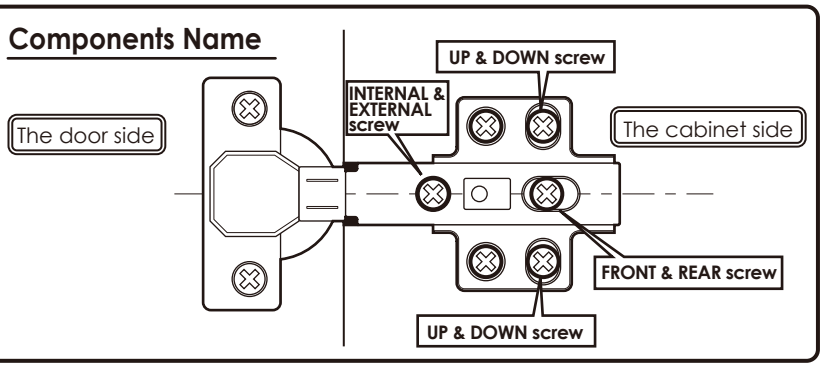

Obvious gaps between doors or Doors don't look closed

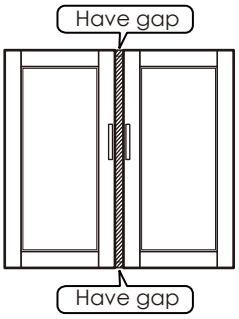

1 Turn "internal & external screw" to the right can make the door approach inside.
Please adjust the doors little by little.

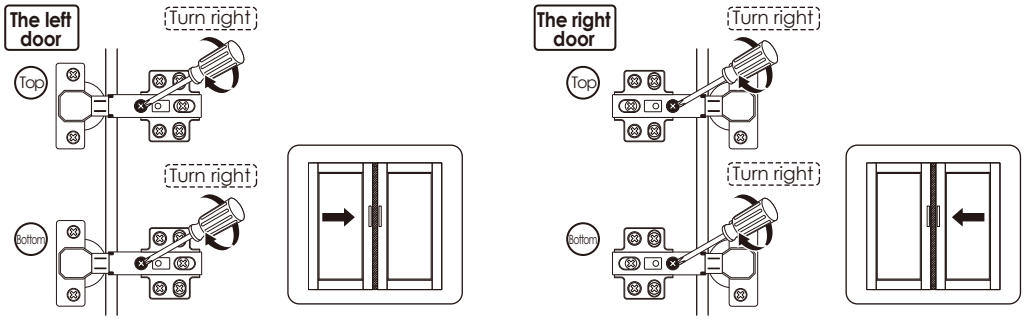

※ If the 2 doors are overlap, please turn the "internal & external screw" to the left.

When door is crooked



Please take the following steps to adjust first.

1 Rotate the "front and rear screws" to the left

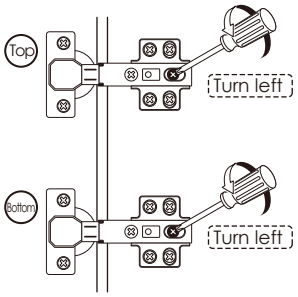

※ After adjusting the "front and rear screw", the door still does not change, please turn the "internal & external screw" to the right Slightly.

2 Push the door to the cabinet

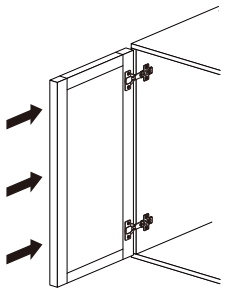

3 Rotate the "front and rear screws" to the right

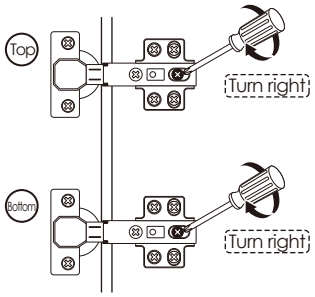

When door is leaning

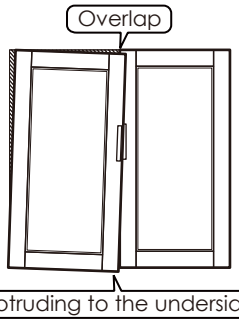

1 Turn "internal & external screw" to the left can make the top of the door tilted outward.

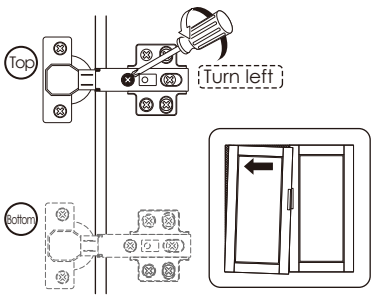

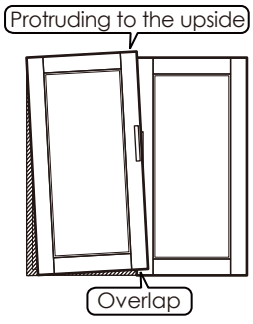

1 Turn "internal & external screw" to the left can make the bottom of the door tilted outward.

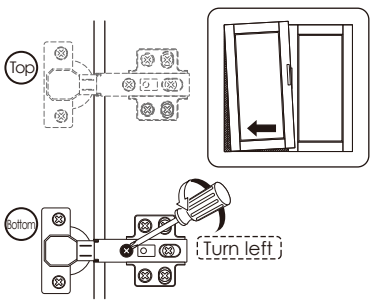

When the door is higher on top

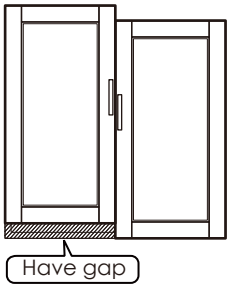

1 Turn "up & down screw" to the left

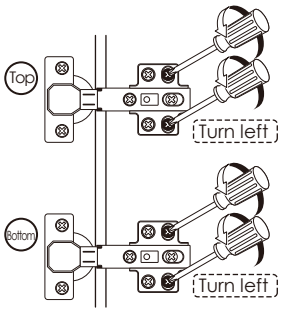

2 Lower the door's height so that 2 doors are of the same height.

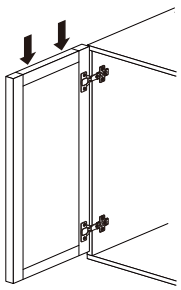

3 Turn "up & down screw" to the right

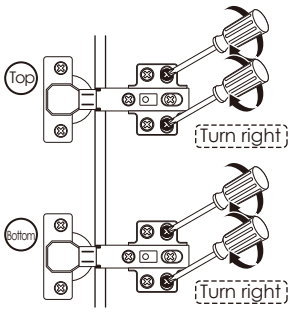

※ If the door is lower on bottom, please lift up the left door slightly on step 2

⚠ WARNING





Children have died from furniture tipover. To reduce the risk of furniture tipover:

- **ALWAYS install Anti-tip device provided.**
- **NEVER put a TV on this product.**
- **NEVER allow children to stand, climb or hang on any drawers, doors, or shelves.**
- **NEVER open more than one drawer at a time.**
- **Place heaviest items in the lowest drawers.**

This is a permanent label. Do not remove!

Made in China