Assembling Guide

Thank you for choosing our product!

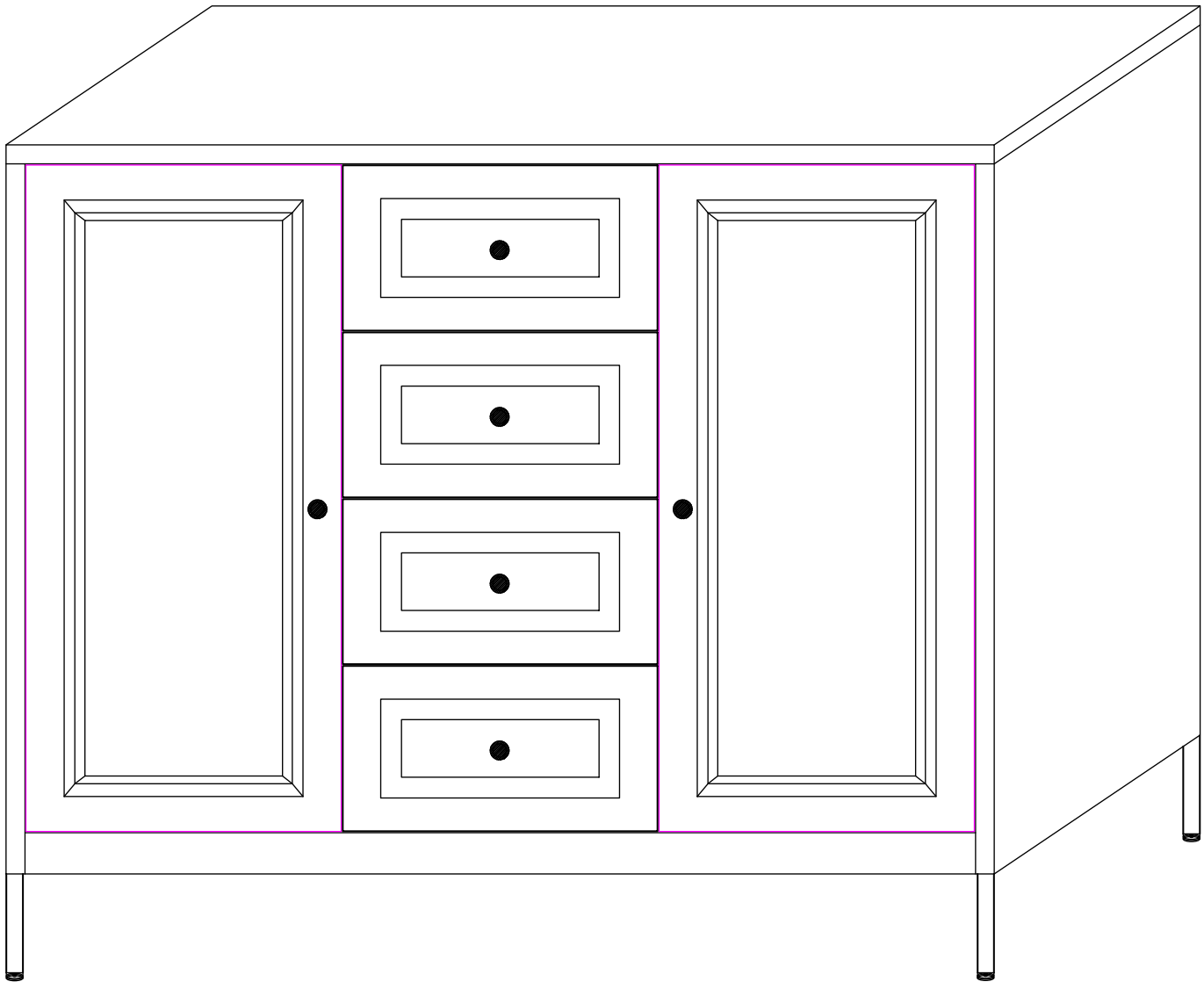



2 PERS



40 MINS

Exploded View

⚠ WARNING!

If furniture is tipped over, it may cause serious injury or even death. To prevent tip-over of this furniture, be sure to use it with the wall attachment devices provided. Use the appropriate screws and plugs for your wall.

If the supplied wall attachment devices do not match the walls in your home, consult your local professional to use screws and plugs that fit your walls. Please read and follow each step in the instructions carefully.

Please pay attention to the iron corner protectors and cabinet parts inside the package. If the iron corner guard is damaged, you can just discard it; if you find any broken or damaged cabinet parts, please contact customer service immediately for replacement.

Sharp edges of metal parts can cause serious injury.

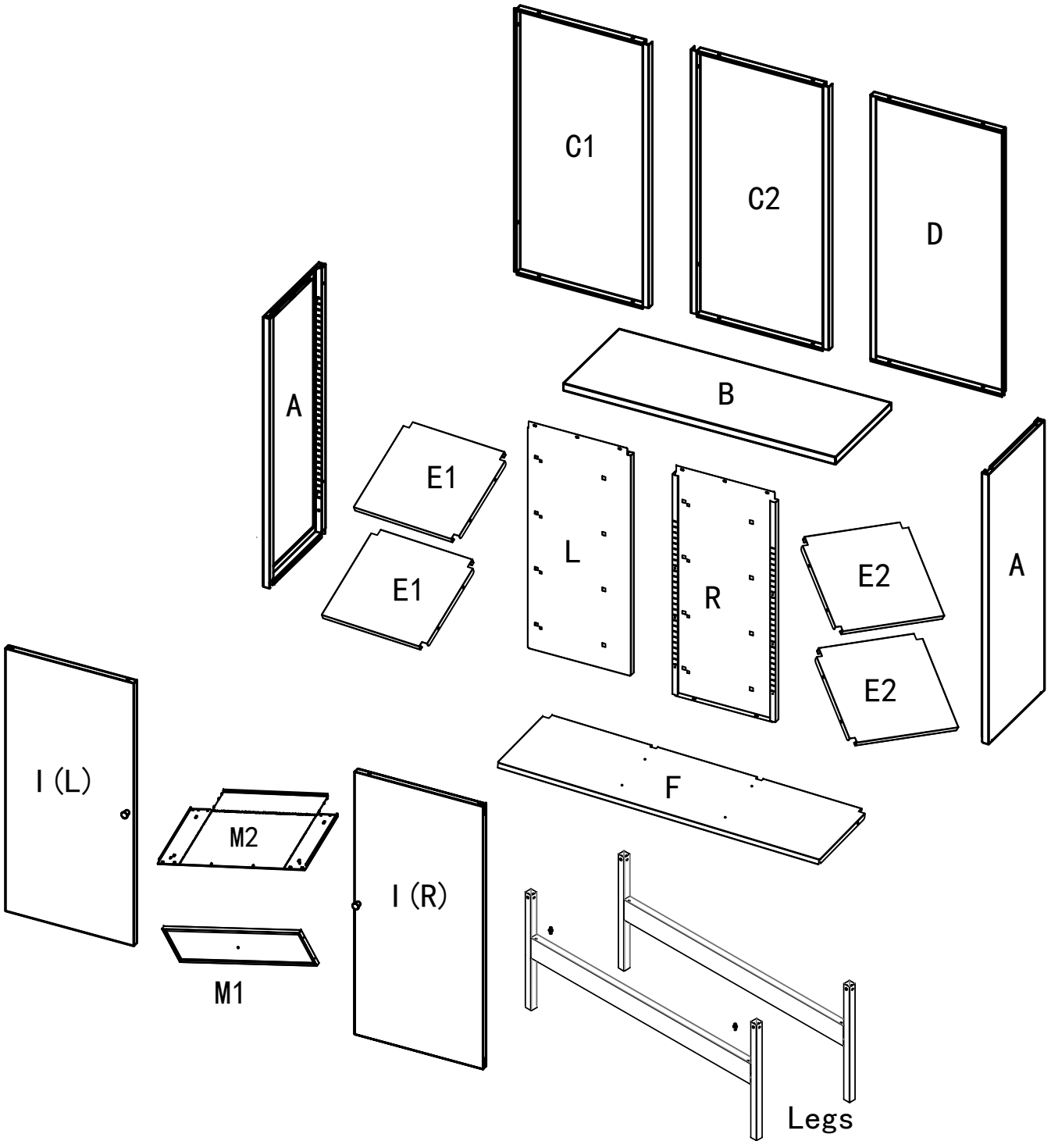

Ax2 Side Panel 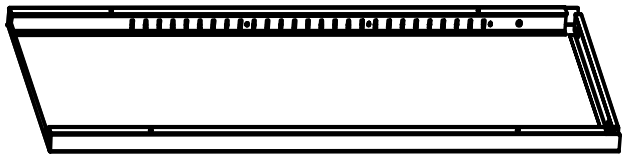	Bx1 Top Panel 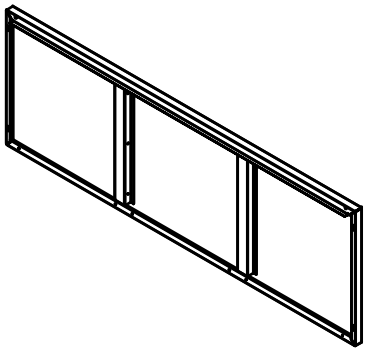
C1x1 Left Back Panel 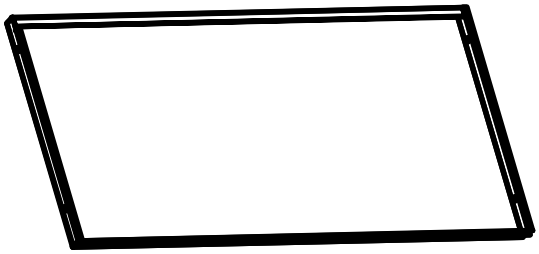	C2x1 Middle Back Panel 
Dx1 Right Back Panel 	E1x2 Left Shelf 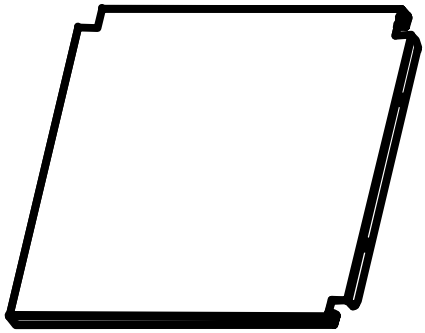
E2x2 Right Shelf 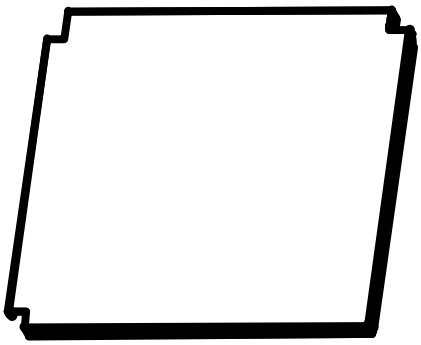	Fx1 Bottom Panel 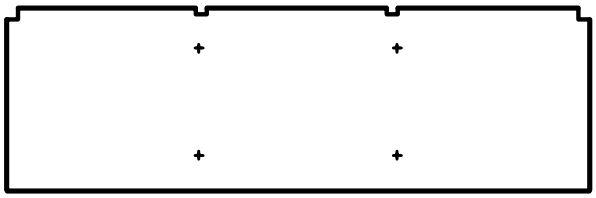

Lx1 Middle Left Panel 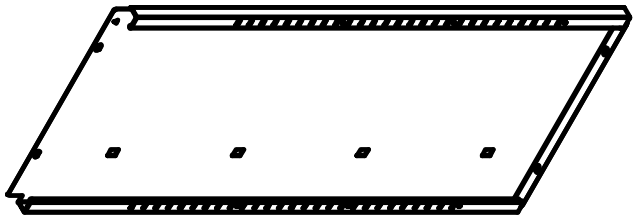	Rx1 Middle Right Panel 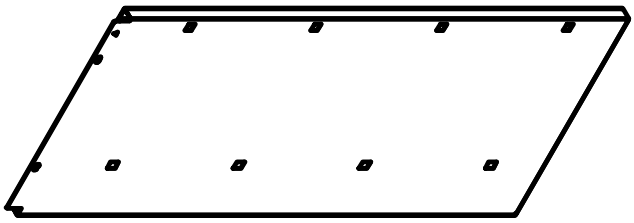
M1x4 Drawer Front 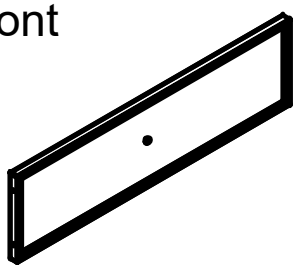	M2x4 Drawer Base 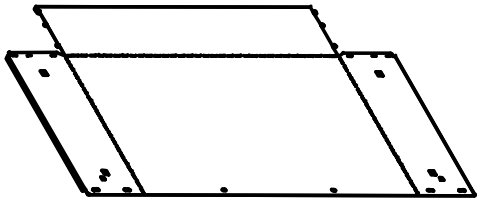
I(L)x1 Left Door 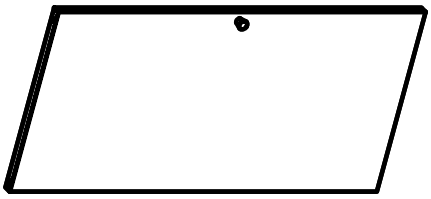	I(R)x1 Right Door 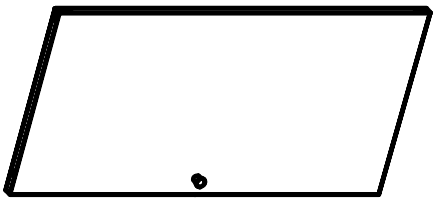
Legs x2 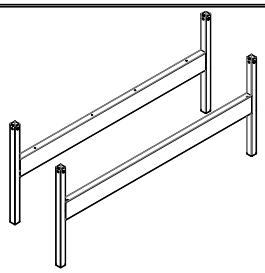	Drawer Rail x 4L&4R 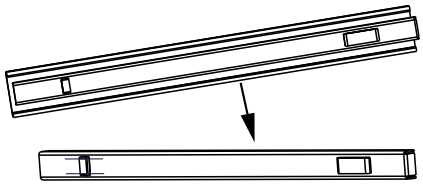
Shelf Clips x16 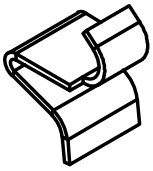	Hinge and Gasket x2 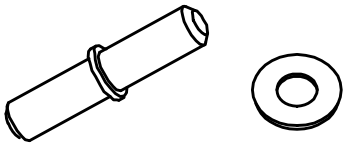
Handle and Screws(M4x8) x6 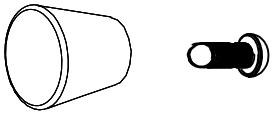	Assembling Screws(M5x10) x56 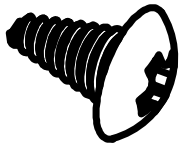
Expansion screws 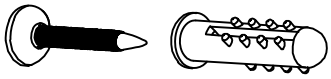	Screwdriver 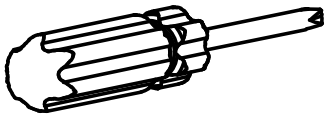 *It would be better if you could use power tools for installation.

STEP 1 Install the sides.

Attach As to legs, and secure with 4 screws.

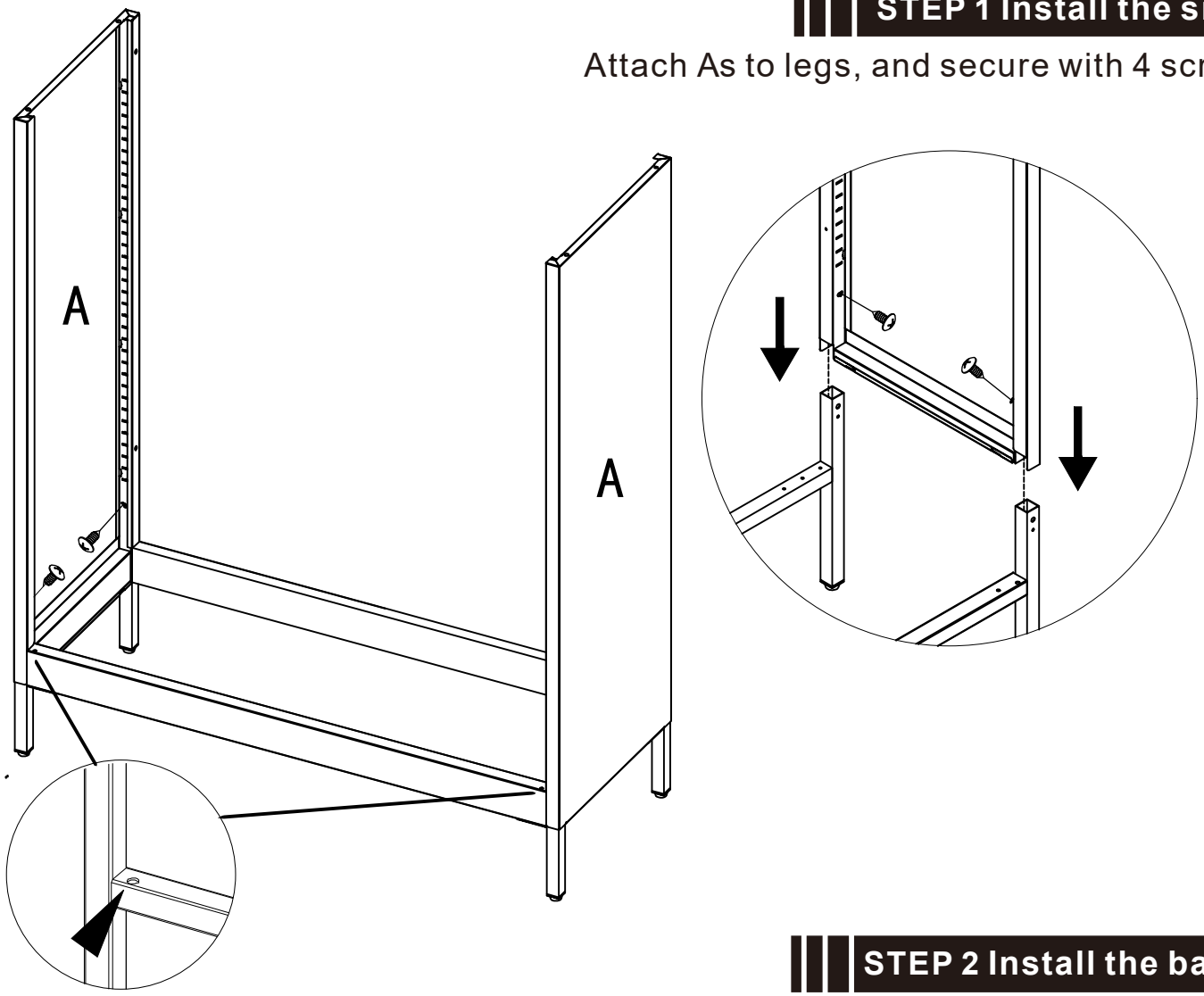

Holes keep outward

STEP 2 Install the backs.

First to attach C1 and D, secure with 4 screws to side panel As, then slide C2 in and secure 4 screws, finally to secure 6 screws at bottom of each back panel to the legs.

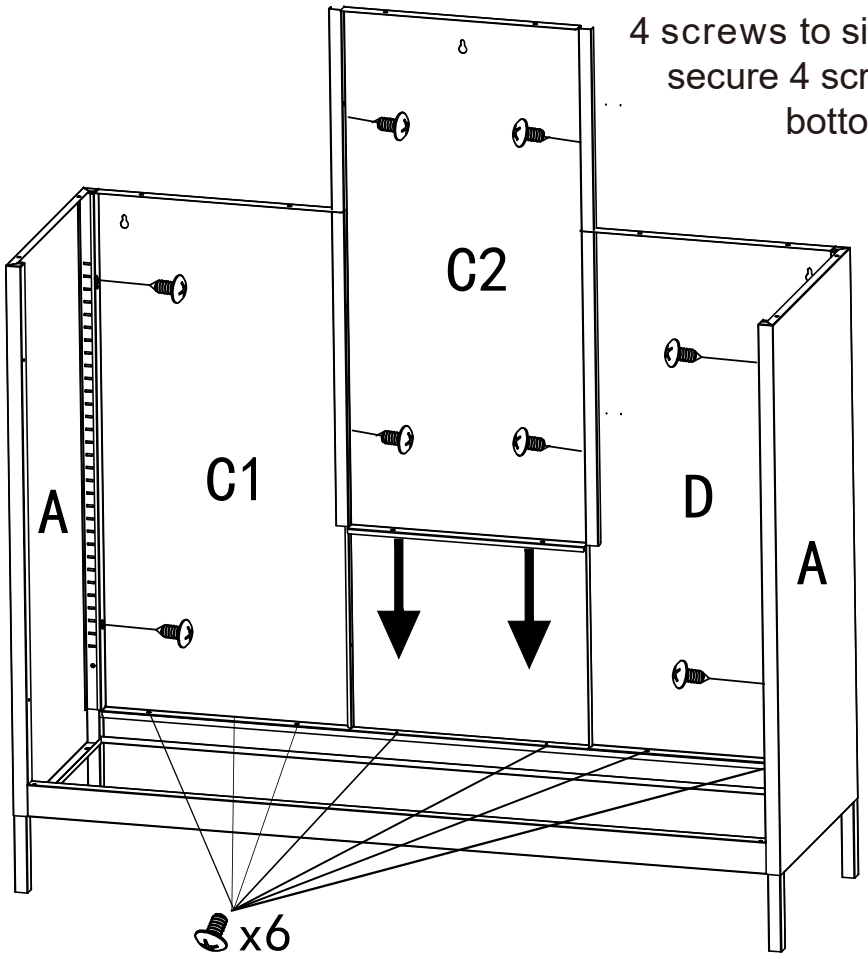

STEP 3 Install the top.

Attach top panel B, and secure with 10 screws

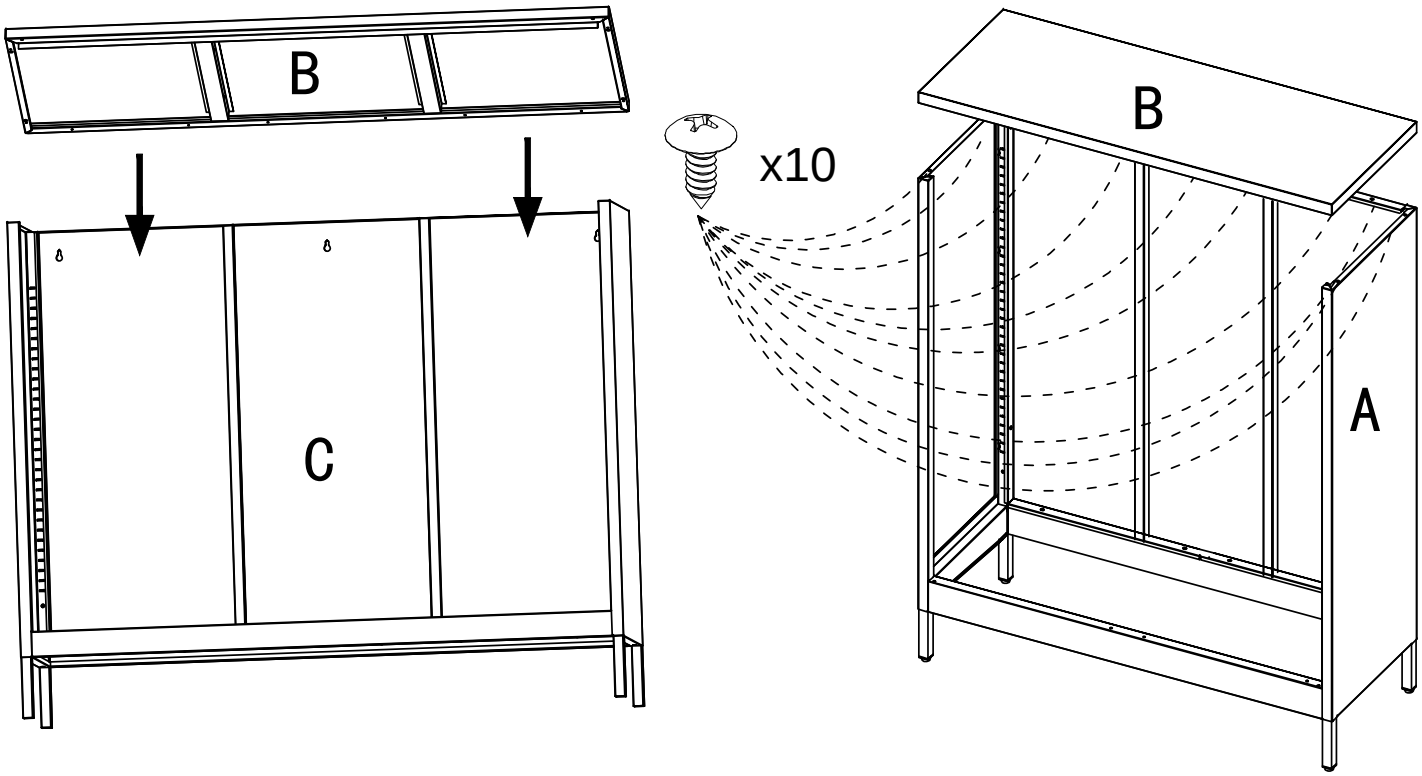

STEP 4 Install the bottom.

Put in the bottom panel F.

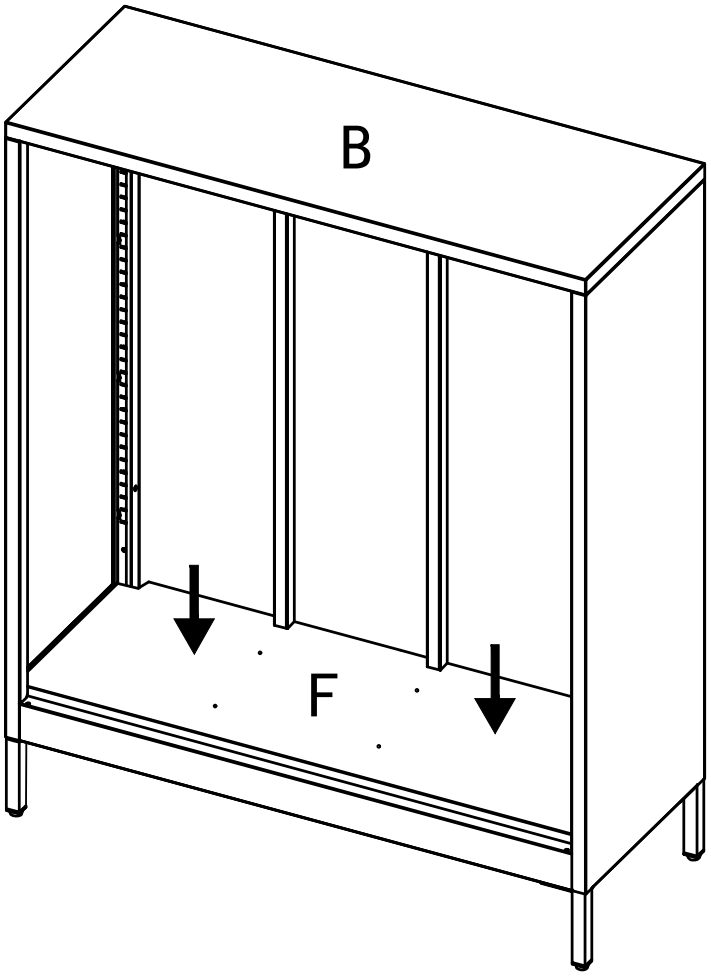

STEP 5 Install the middle panel L & R.

Install the middle panel , and secure with 8 screws.

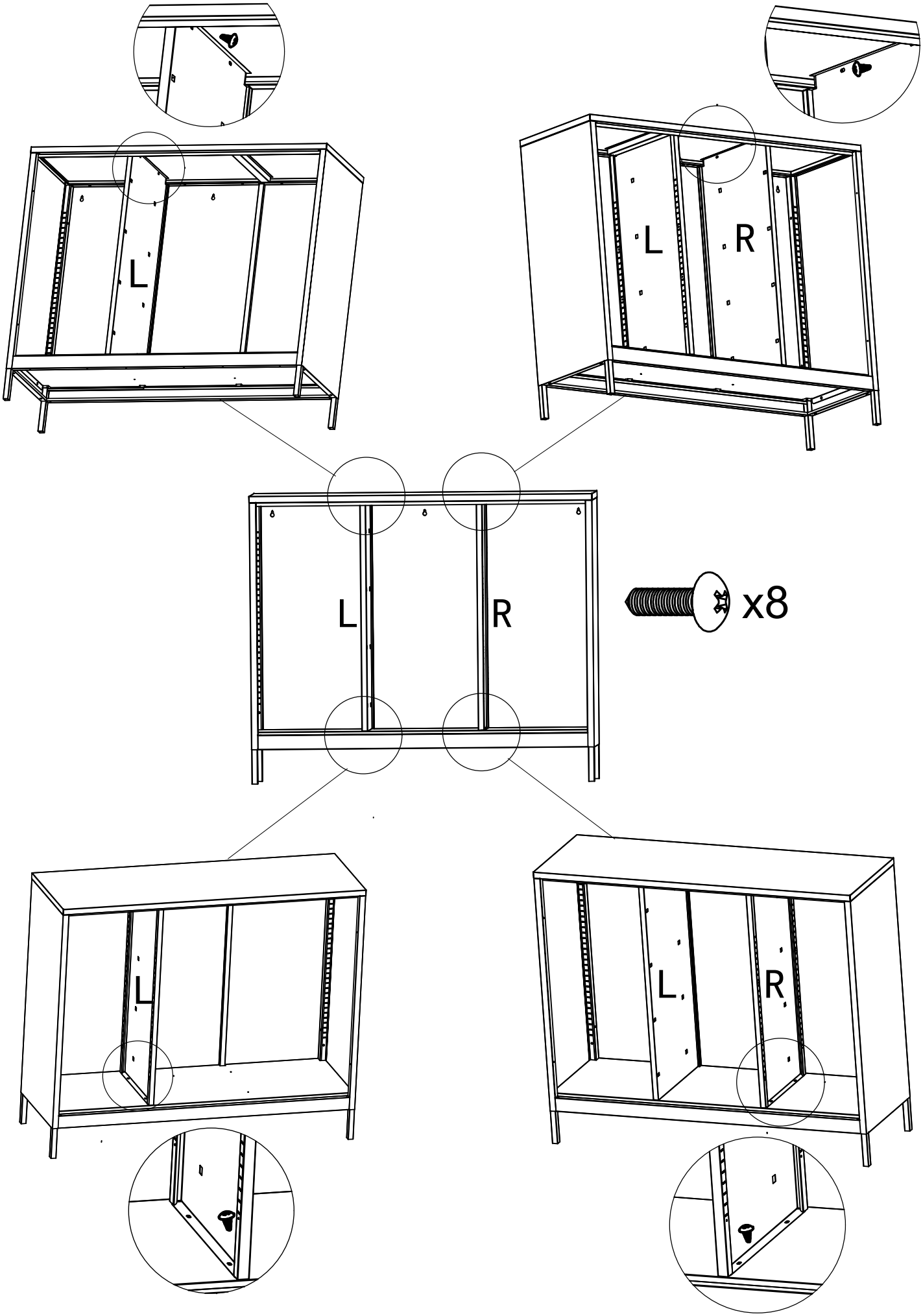

STEP 6 Install the shelf E1 and E2.

First to install the shelf clips and then put Es on it.

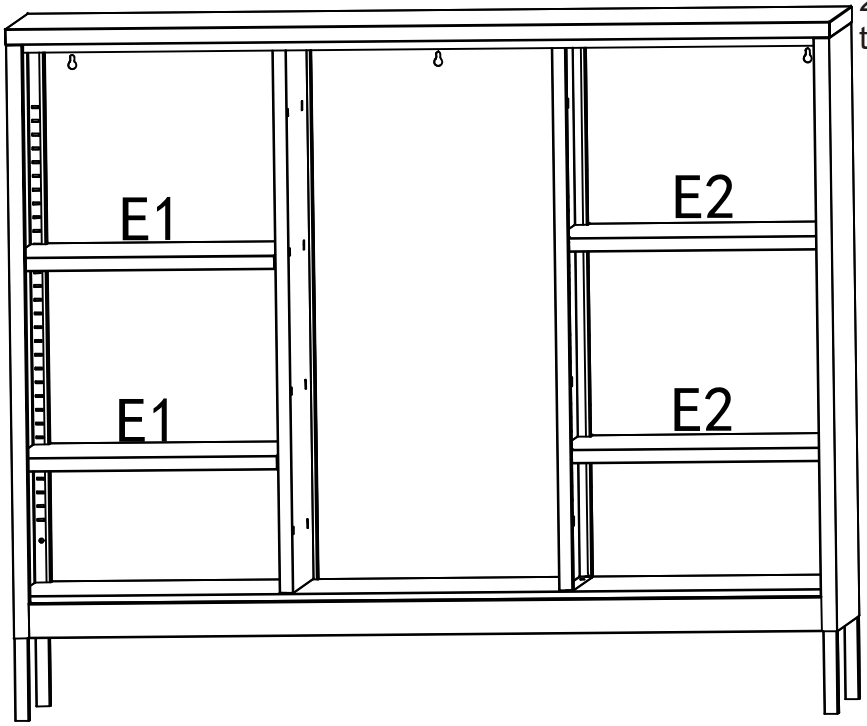

1. Insert bending side first,
2. Fall down the flat side to secure.

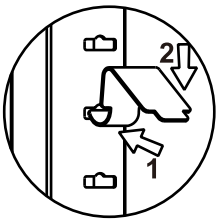

3. Now shelf can safely sits on it.

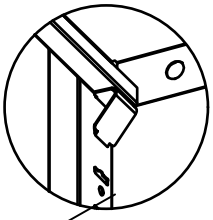

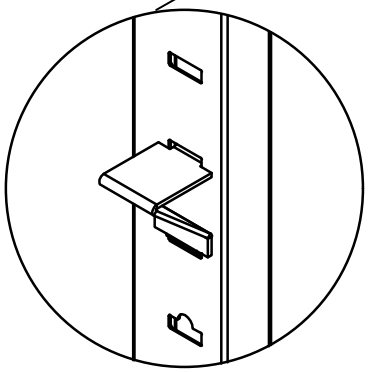

Make sure the clips at 4 corners are at the same height.

STEP 7 Assemble the drawers.

Fold the drawer base and attach the drawer front, then secure with 5 screws.

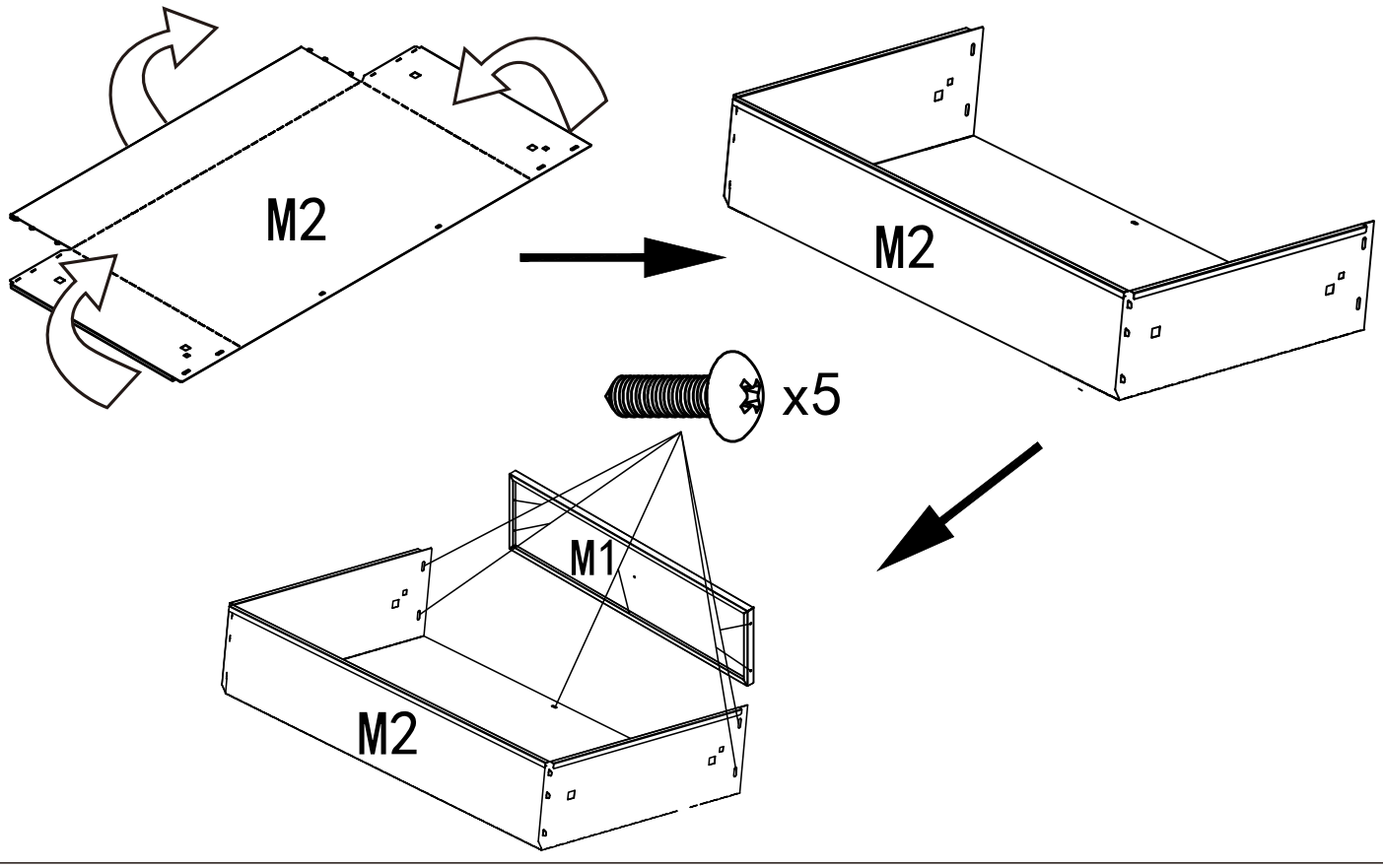

STEP 8 Install the rail.

Push and lift up the rail to install.

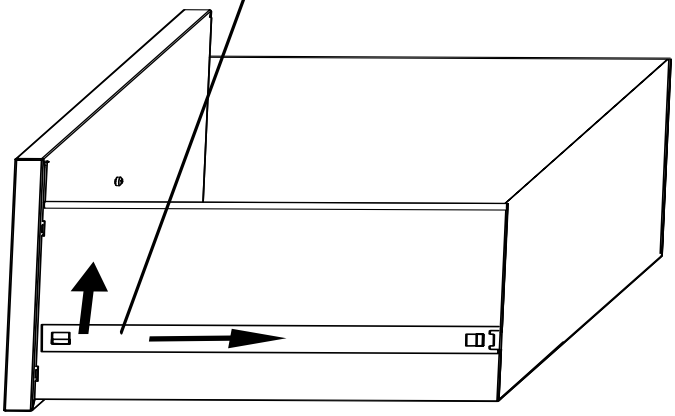

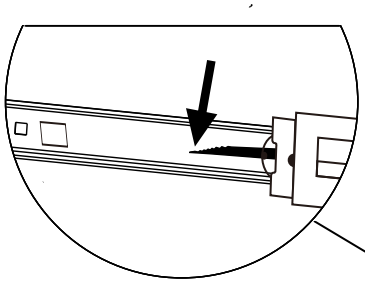

Press down (or pull up)
the release bar to take out
the front half of the rail.

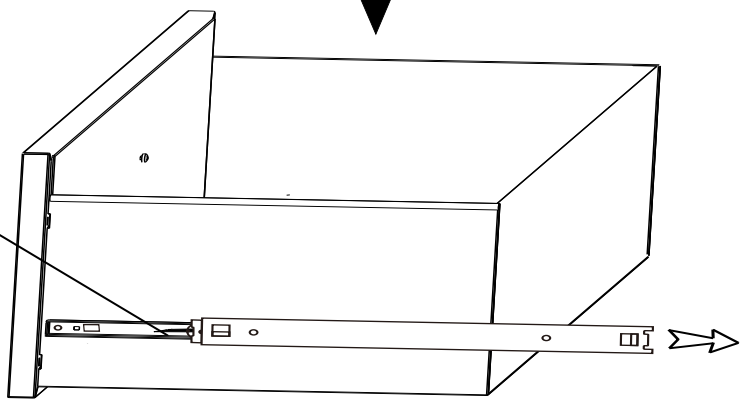

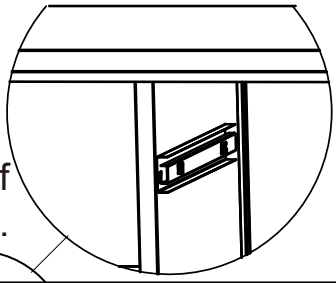

Install the front half
into the cabinet.

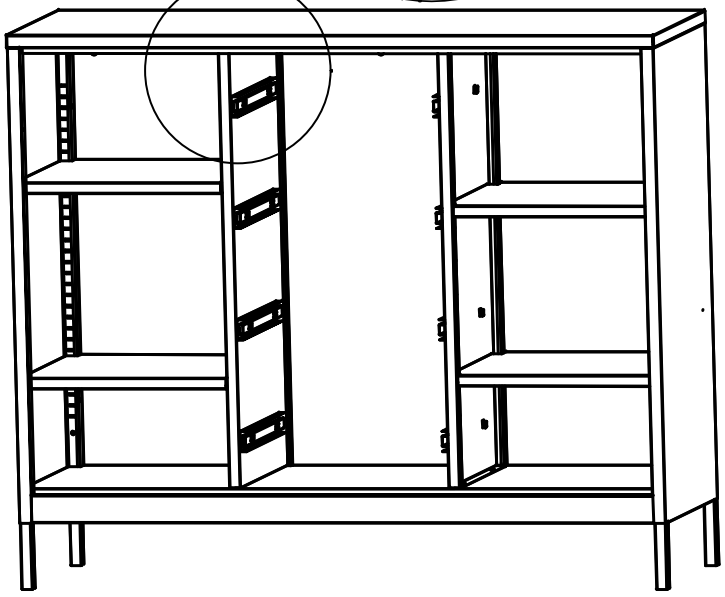

Pull out the rails.

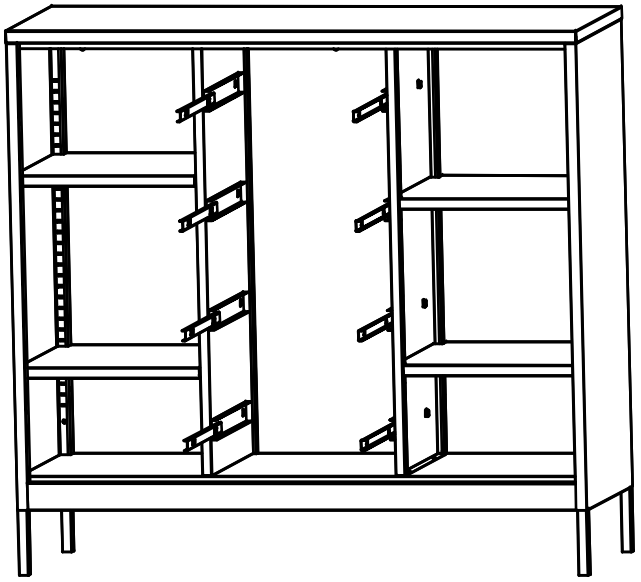

STEP 9 Install the drawers.

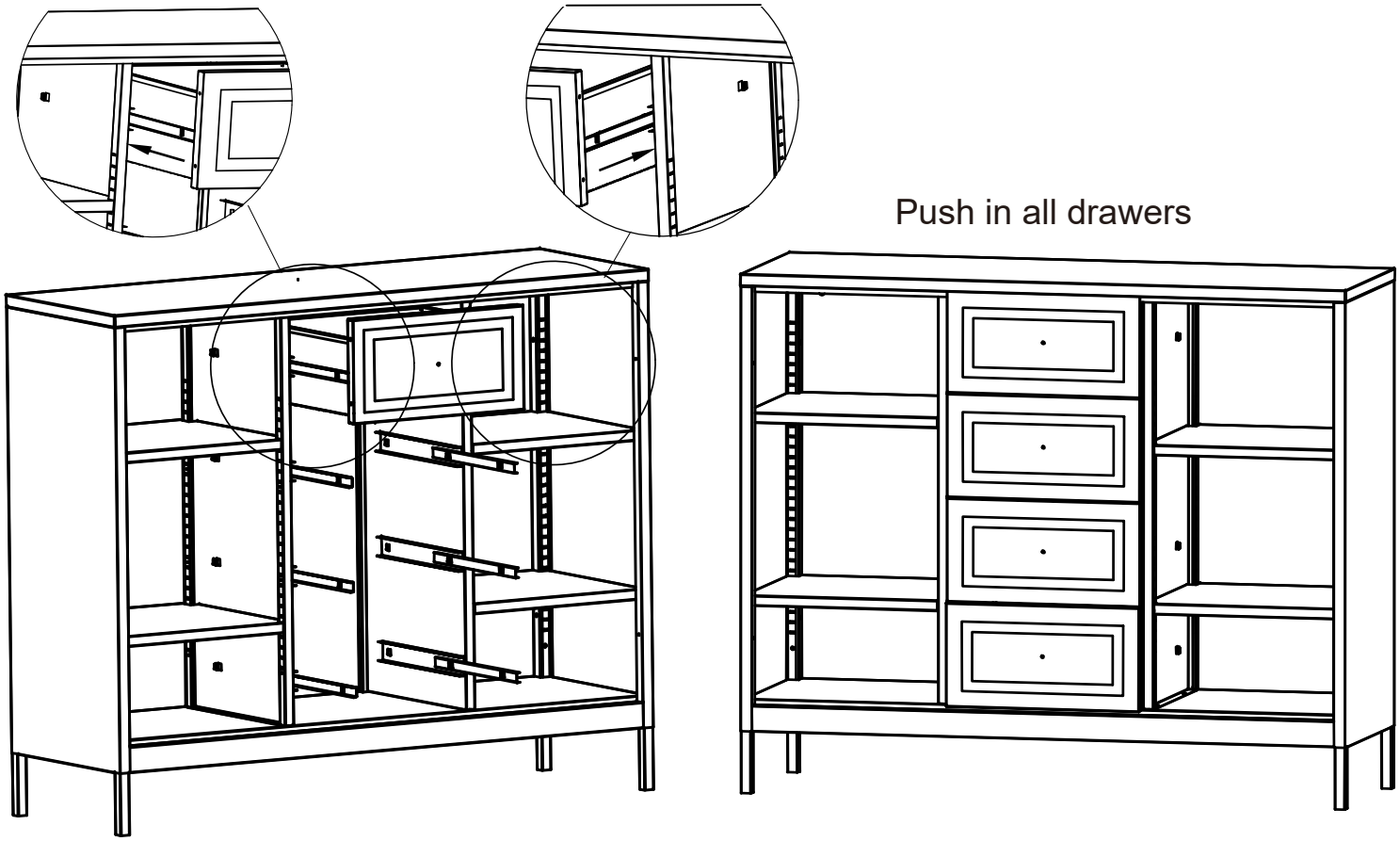

STEP 10 Install the doors.

First to insert hinge and gasket into the holes on the leg.
Then put door in, press down the top hinge spring to insert the door to the cabinet.

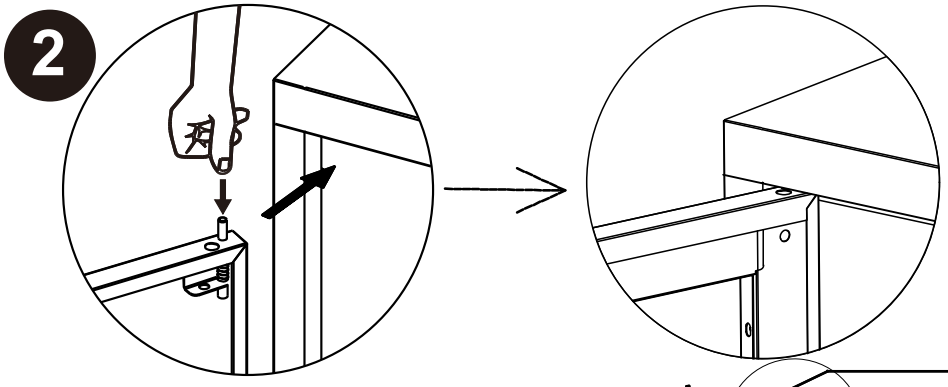

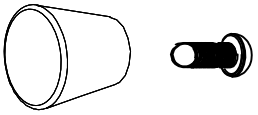

Finally to install the handles.

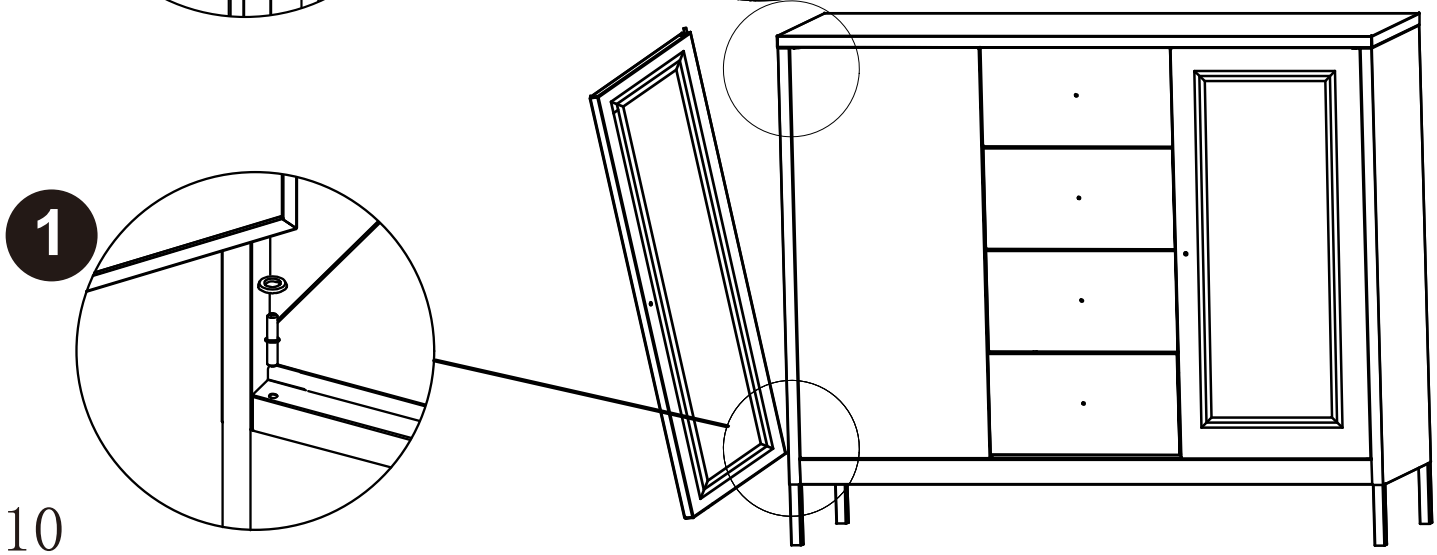

STEP 11 Install the anti-tilt device.

This step MUST be fully completed to prevent the cabinet from tipping over.

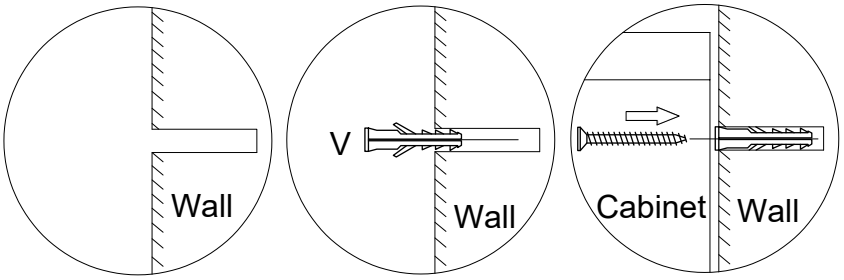

1. Drill holes on the wall 2. Insert V 3. Fasten the screw from cabinet

