ASSEMBLY INSTRUCTION

PATIO FURNITURE SETS

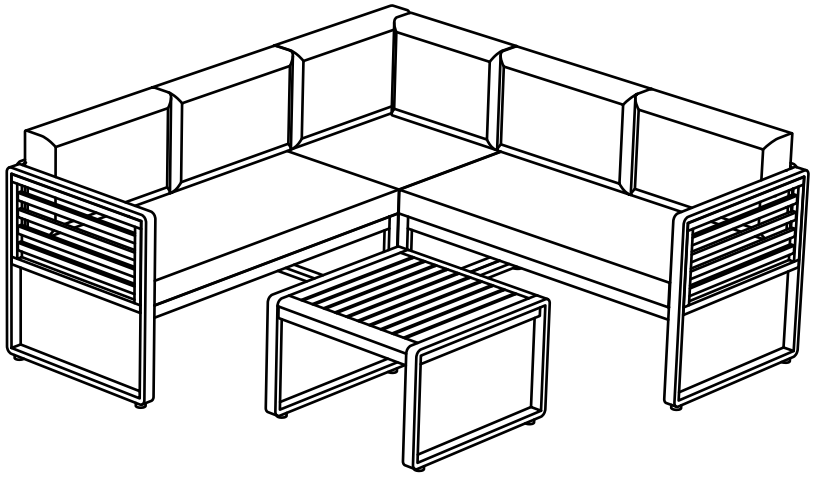

Notice:

1. 50% Tighten before fixing all screws, Allen wrench is recommended instead of an electric drill.
2. Place the item on a flat ground to adjust and make sure it remains stable.
3. Tighten up all screws with tools gradually.
4. If the screws are not aligned with holes during assembly, please loosen all the other screws to 50% and continue the assembly process.
5. If the item is not stable, please loosen all the screws, adjust it on a flat ground and tighten up all screws again.
6. Note : If one or some screws are fully tightened during assembly, chances are the others will not be aligned with holes. In addition, all the holes are designed to be relatively larger to provide more space for the adjustment of the screws.

x1

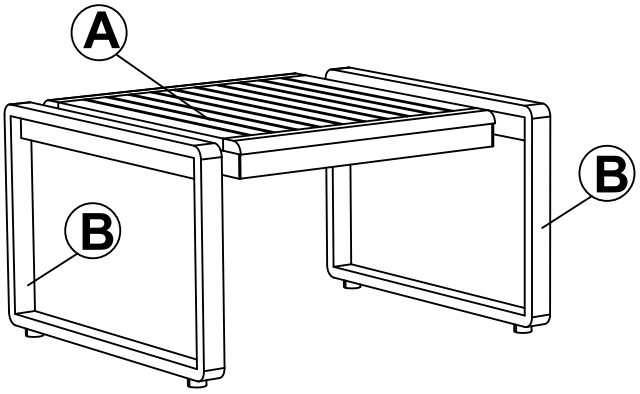

x1

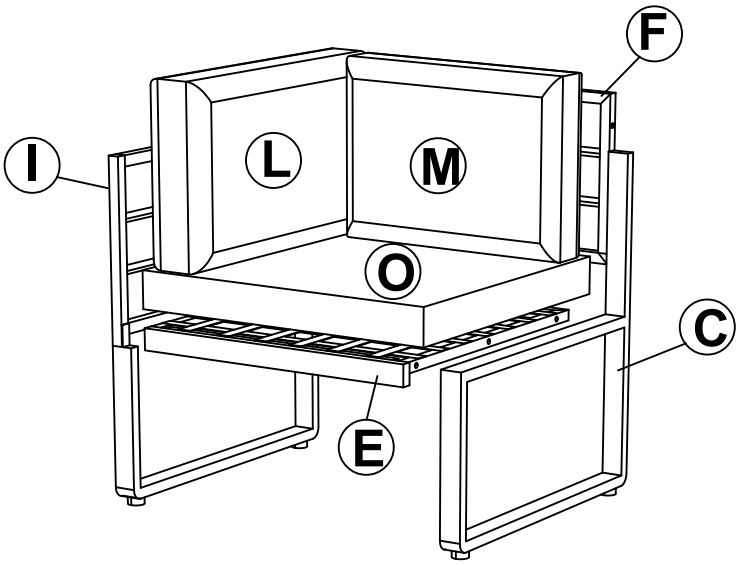

x1

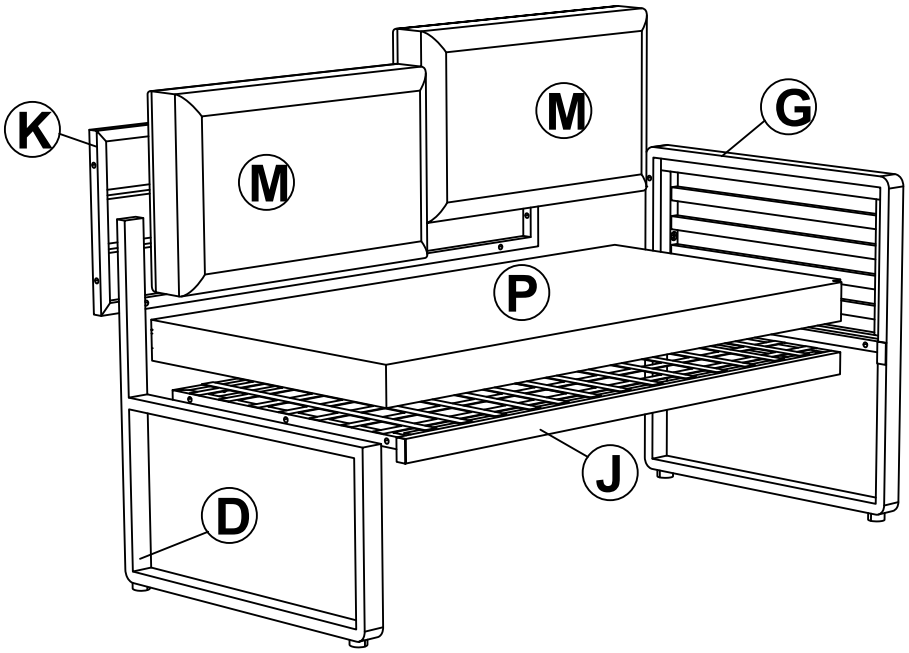

x1

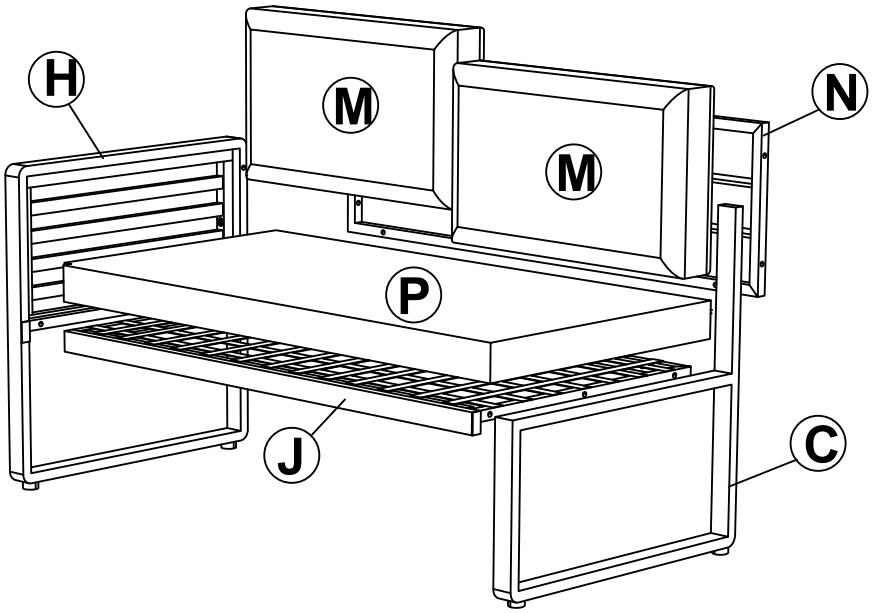

Part List and Hardware

A

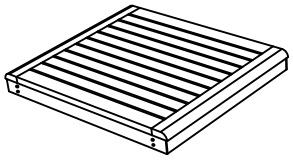

Wooden Top (1 pc)

B

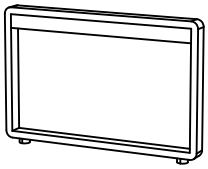

Table Leg (2 pcs)

C

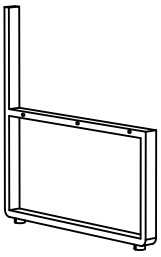

Right H-Shape Leg (2 pcs)

D

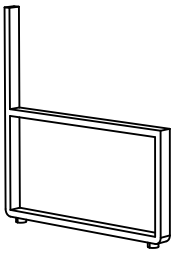

Left H-Shape Leg (1 pc)

E

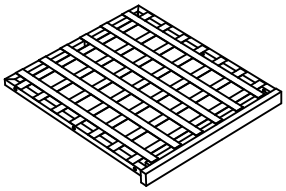

Chair Seat (1 pc)

F

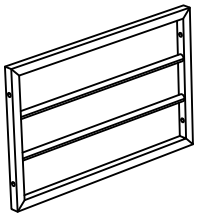

Chair Back (1 pc)

G

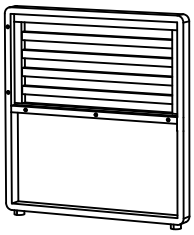

Right Armless (1 pc)

H

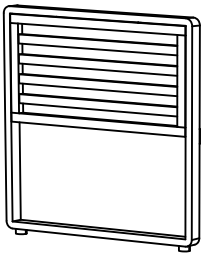

Left Armless (1 pc)

I

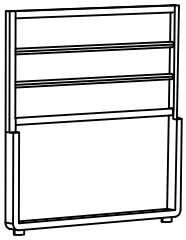

Corner Chair Leg (1 pc)

J

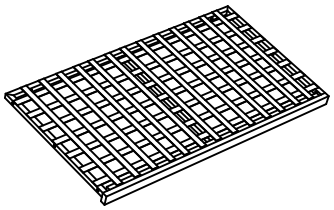

Bench-2 Seat (2 pcs)

K

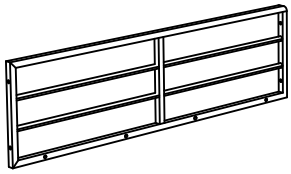

Right Bench-2 Back (1 pc)

N

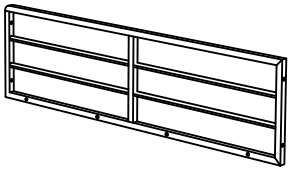

Left Bench-2 Back (1 pc)

L

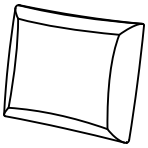

Small Back Cushion (1 pc)

M

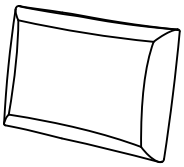

Big Back Cushion (5 pcs)

O

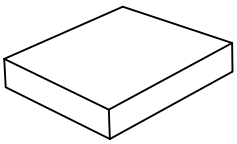

Chair Seat Cushion (1 pc)

P

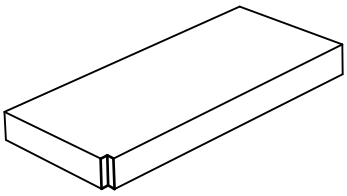

Bench-2 Seat Cushion (2 pcs)

1

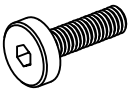

Extra (2 pcs)
Bolt M6x20 (8 pcs)

2

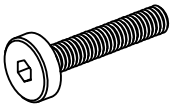

Extra (3 pcs)
Bolt M6x35 (40 pcs)

3

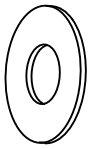

Extra (4 pcs)
Flat Washer M6 (48 pcs)

4

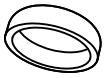

Extra (2 pcs)
Plastic Bolt Cover (12 pcs)

5

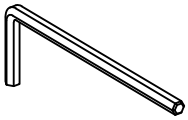

Allen Key (2 pcs)

CARTON CONTENT:

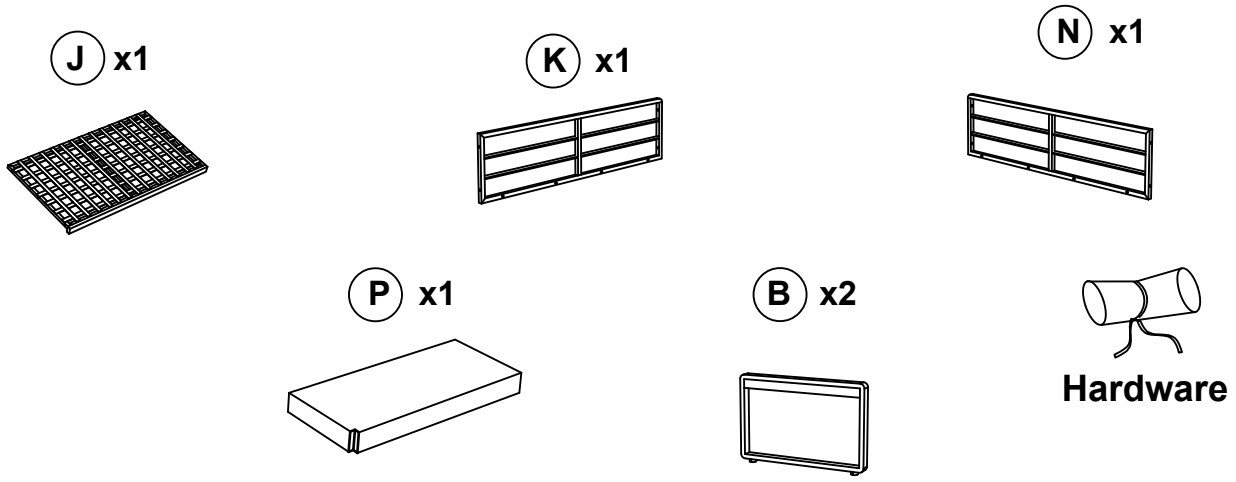

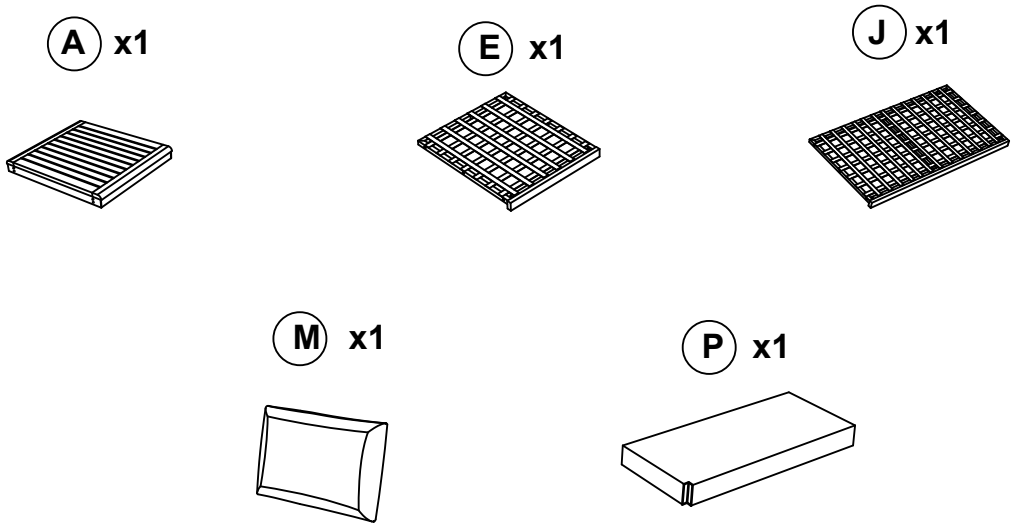

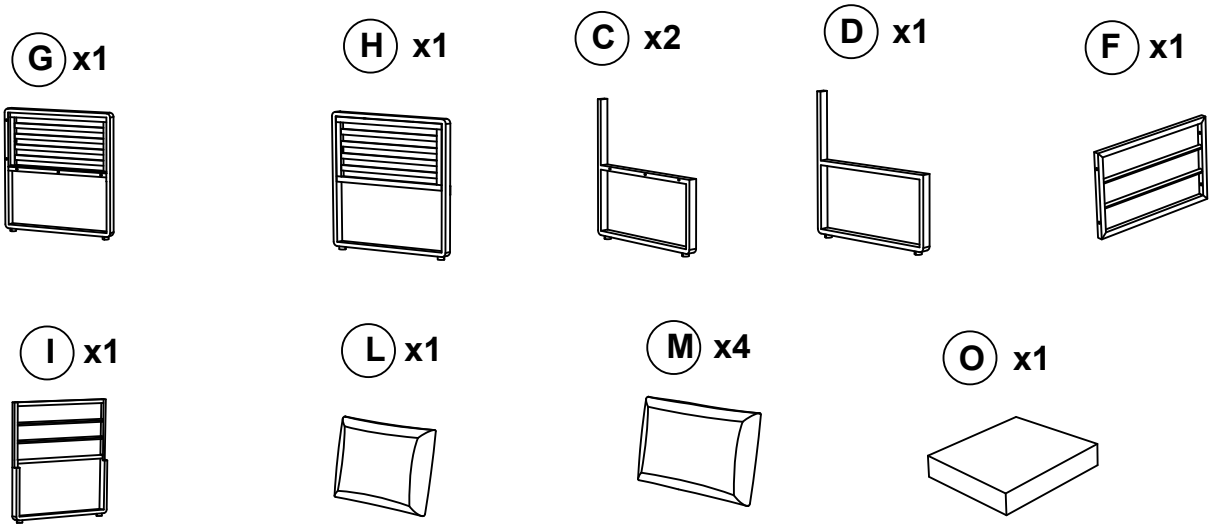

STEP 1

A x1

B x2

① x8

③ x8

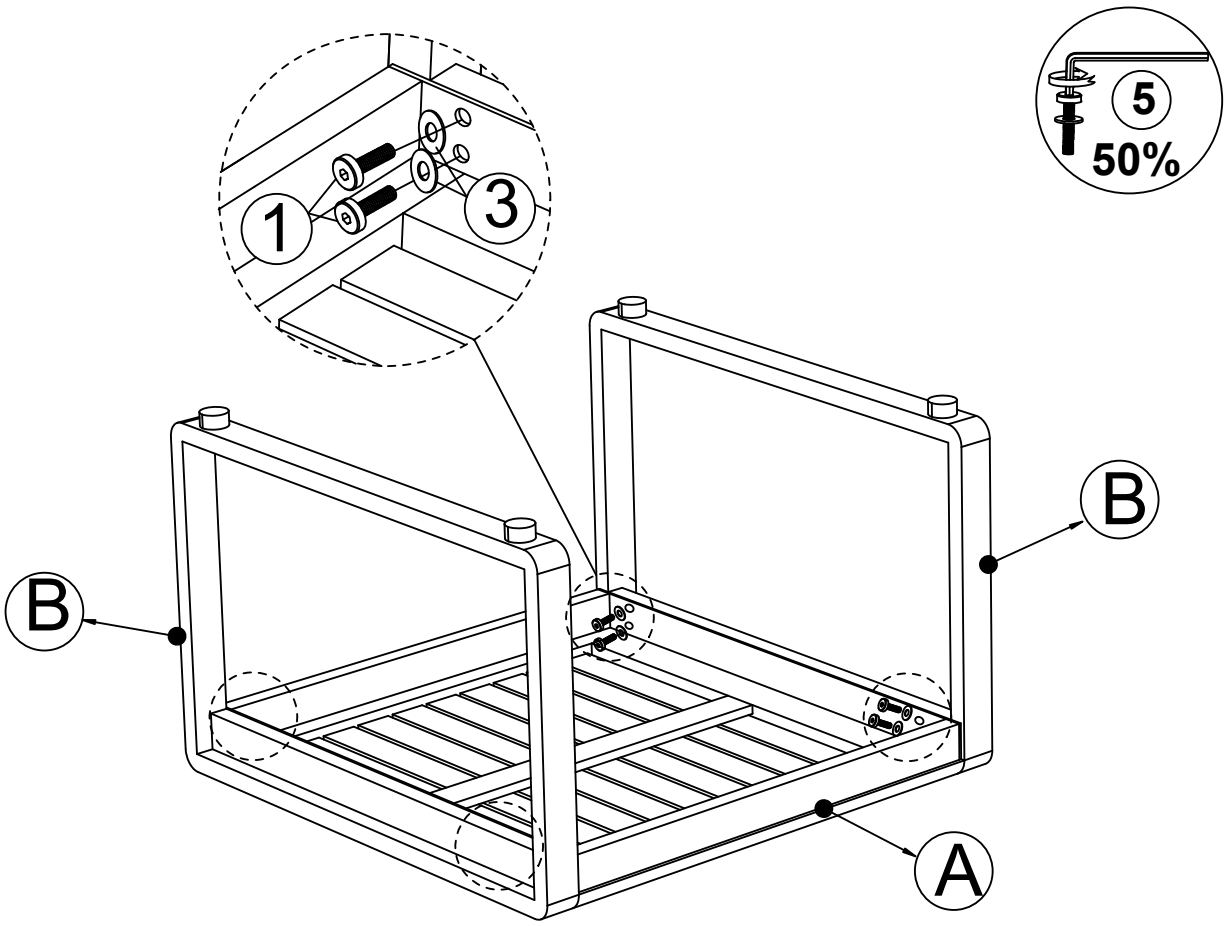

Connect Wooden Top (A) & Table Leg (B) by tighten Bolt (1), Flat Washer (3) with Allen Key (5).

STEP 2

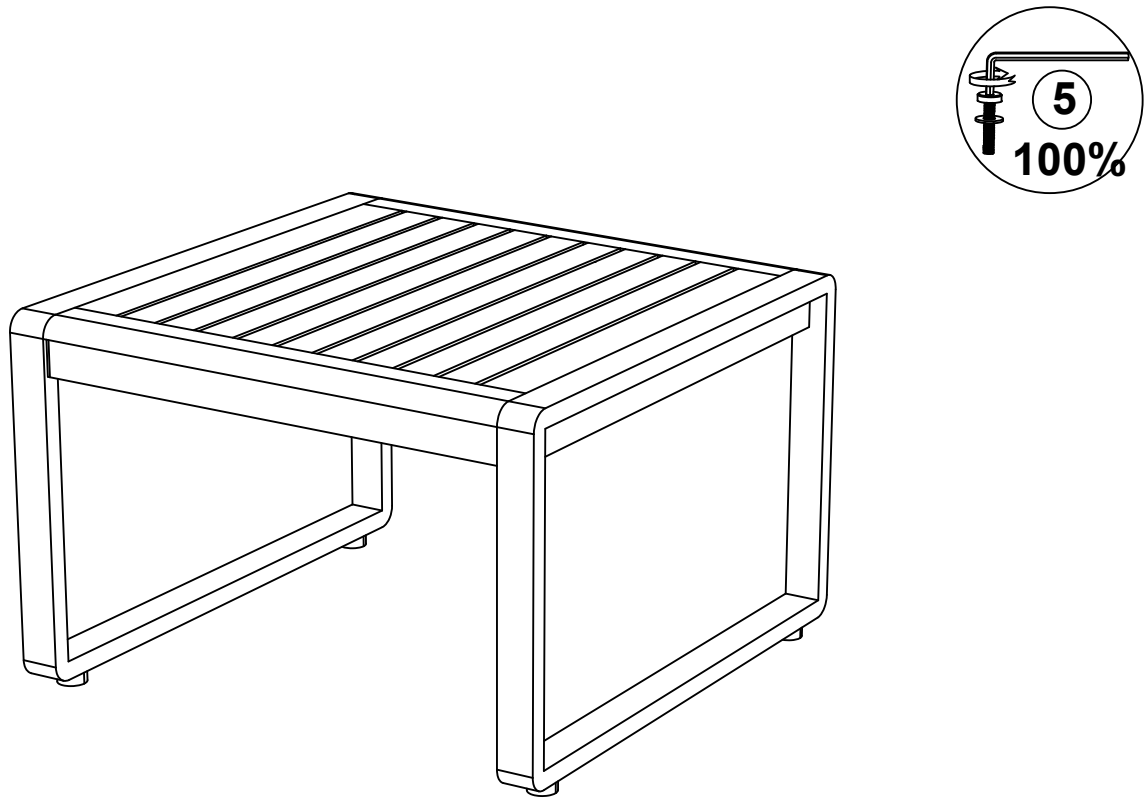

Firmly, tighten all Bolts and put the Table upright to finish Table.

STEP 3

I x1

E x1

② x3

③ x3

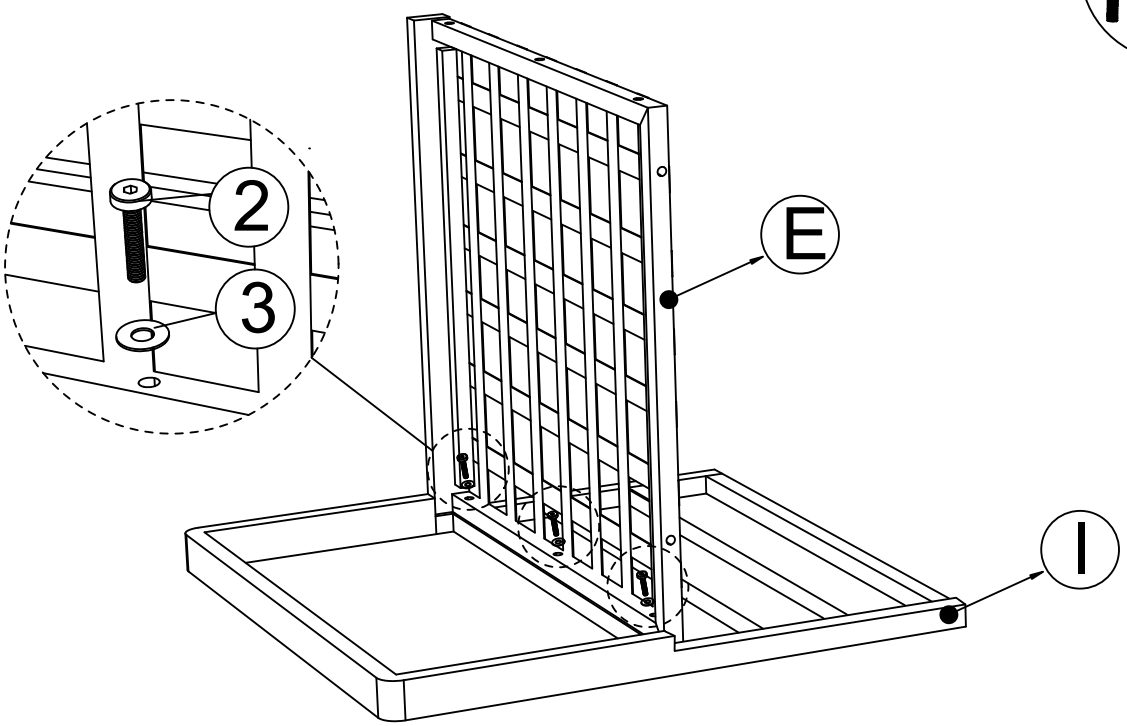

Connect Corner Chair Leg (I) & Corner Chair Seat (E) by tighten Bolt (2), Flat Washer (3) with Allen Key (5).

STEP 4

F x1

② x4

③ x4

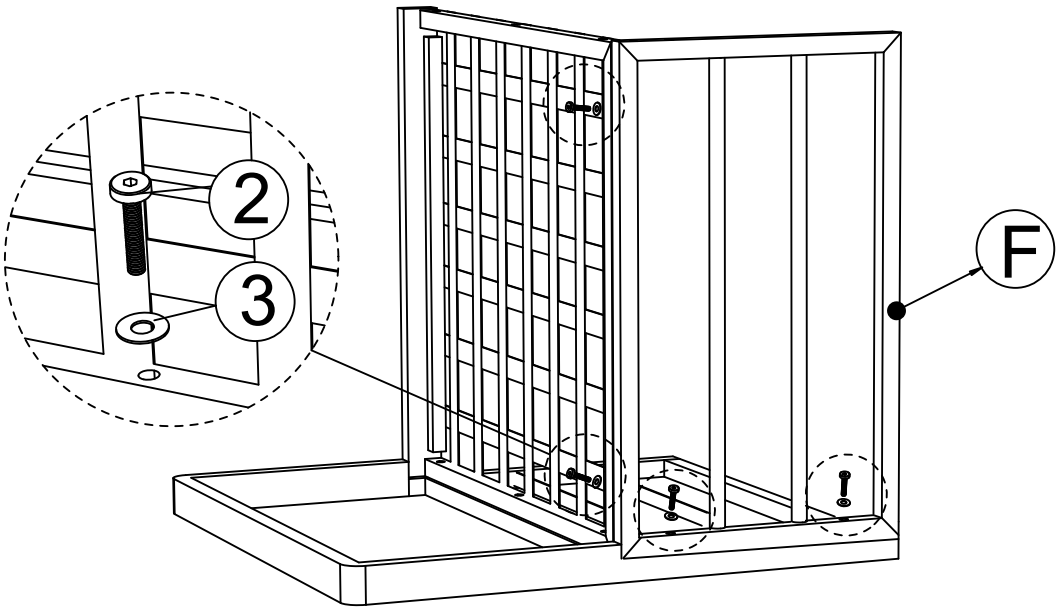

Connect the part from Step 3 & Corner Chair Back (F) by tighten Bolt (2), Flat Washer (3) with Allen Key (5).

STEP 5

C x1

② x5

③ x5

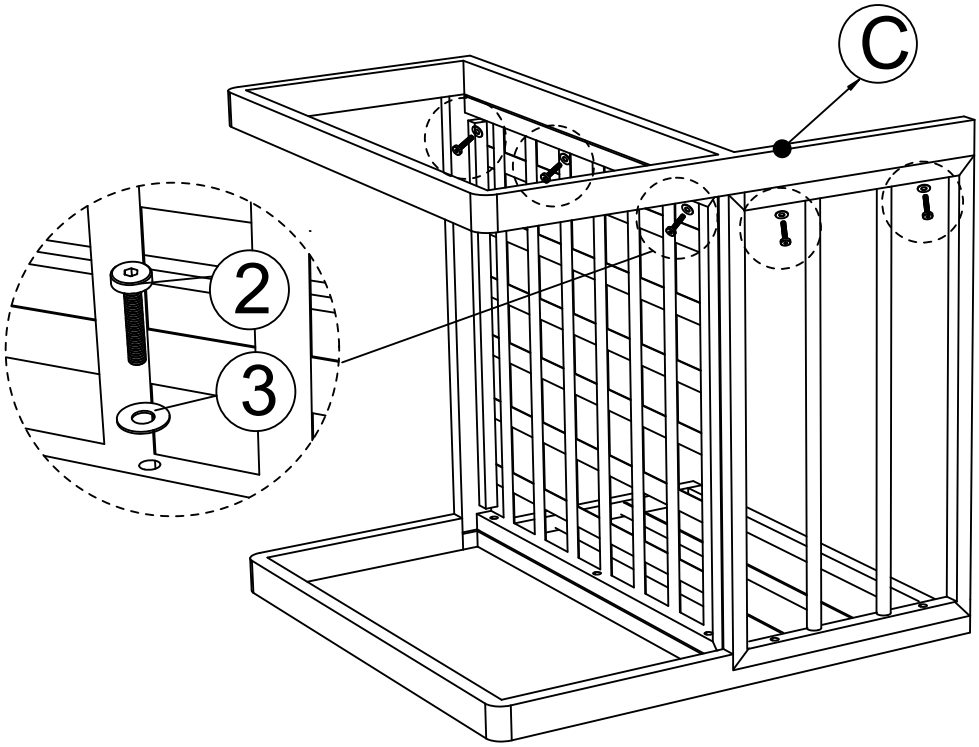

Connect the part from Step 4 & Right H-Shape Leg (C) by tighten Bolt (2), Flat Washer (3) with Allen Key (5).

STEP 6

④ x4

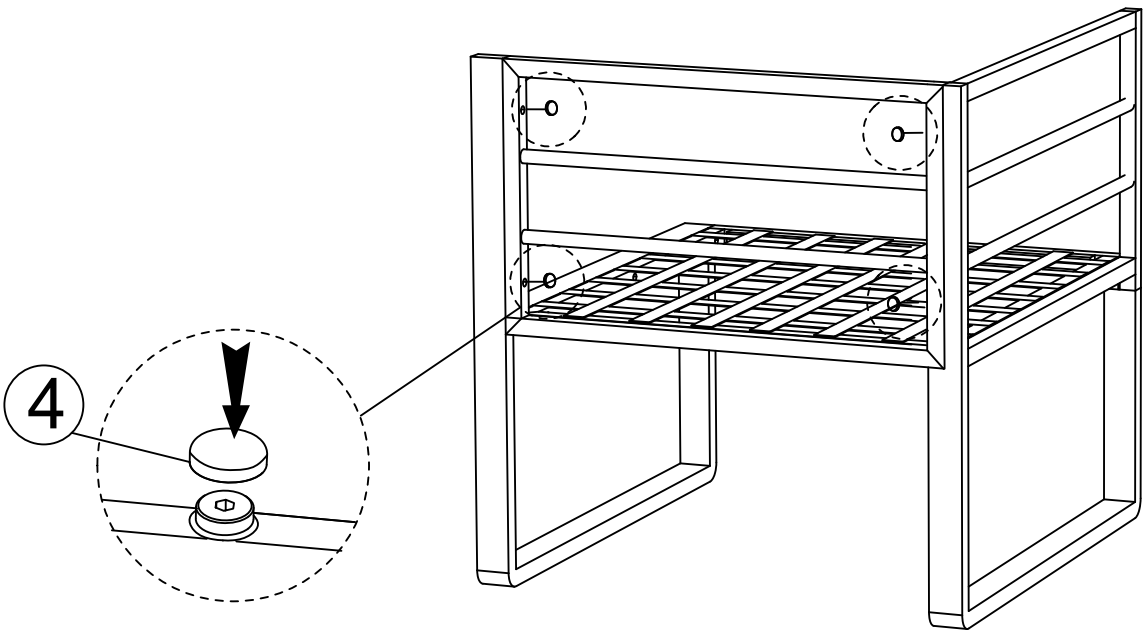

Firmly, tighten all Bolts and Put the Corner Chair upright. Push the Covers (4).

STEP 7

O x1

M x1

L x1

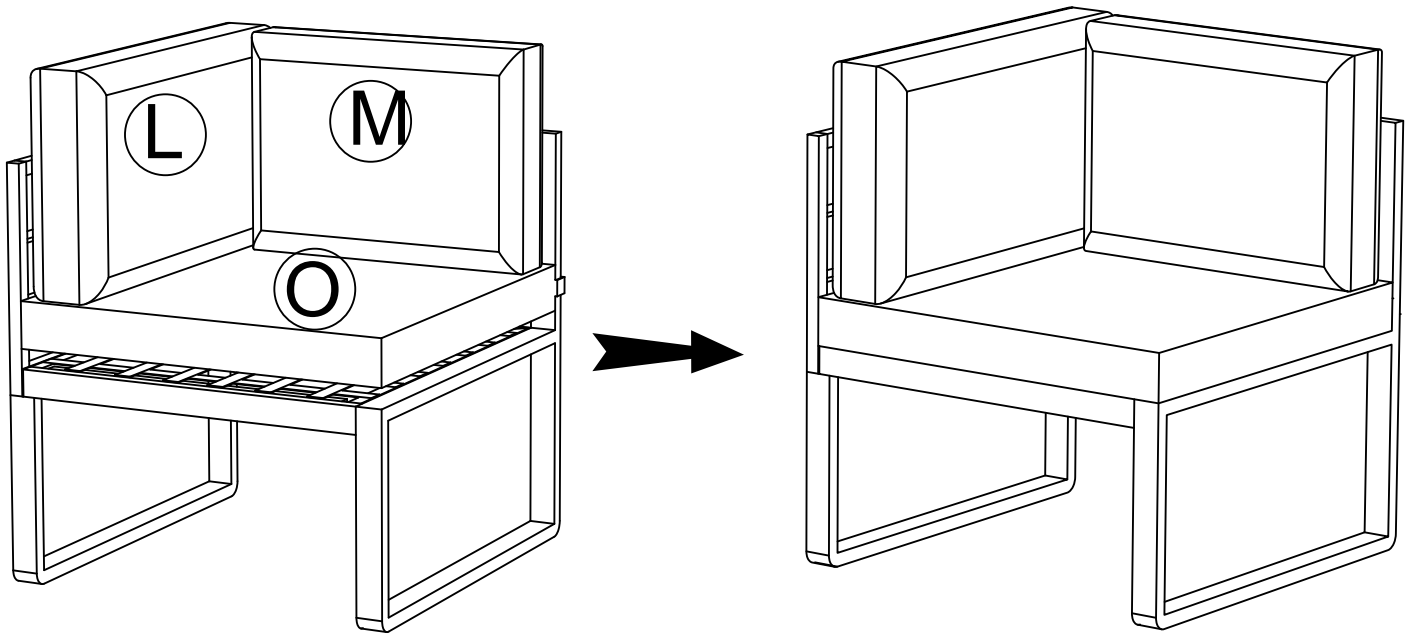

Set up the Cushion (O), (M), (L) to finish Corner Chair.

STEP 8

J x1

G x1

② x3

③ x3

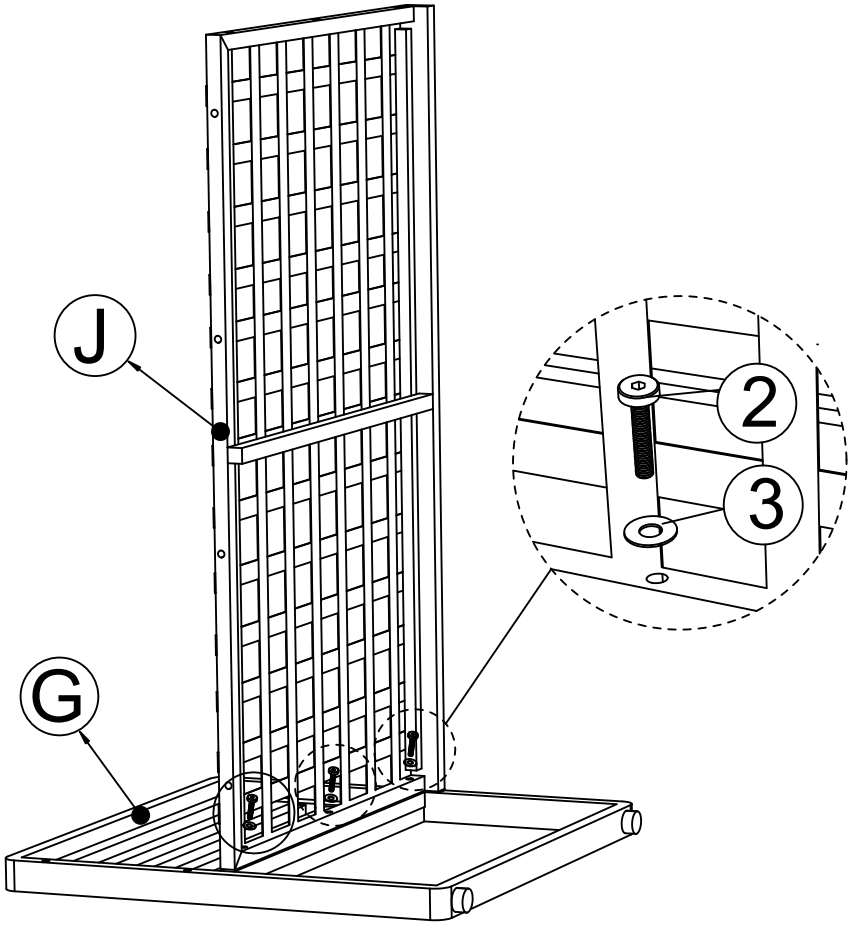

Connect Bench-2 Seat (J) & Right Armless (G) by tighten Bolt (2), Flat Washer (3) with Allen Key (5).

STEP 9

K x1

② x6

③ x6

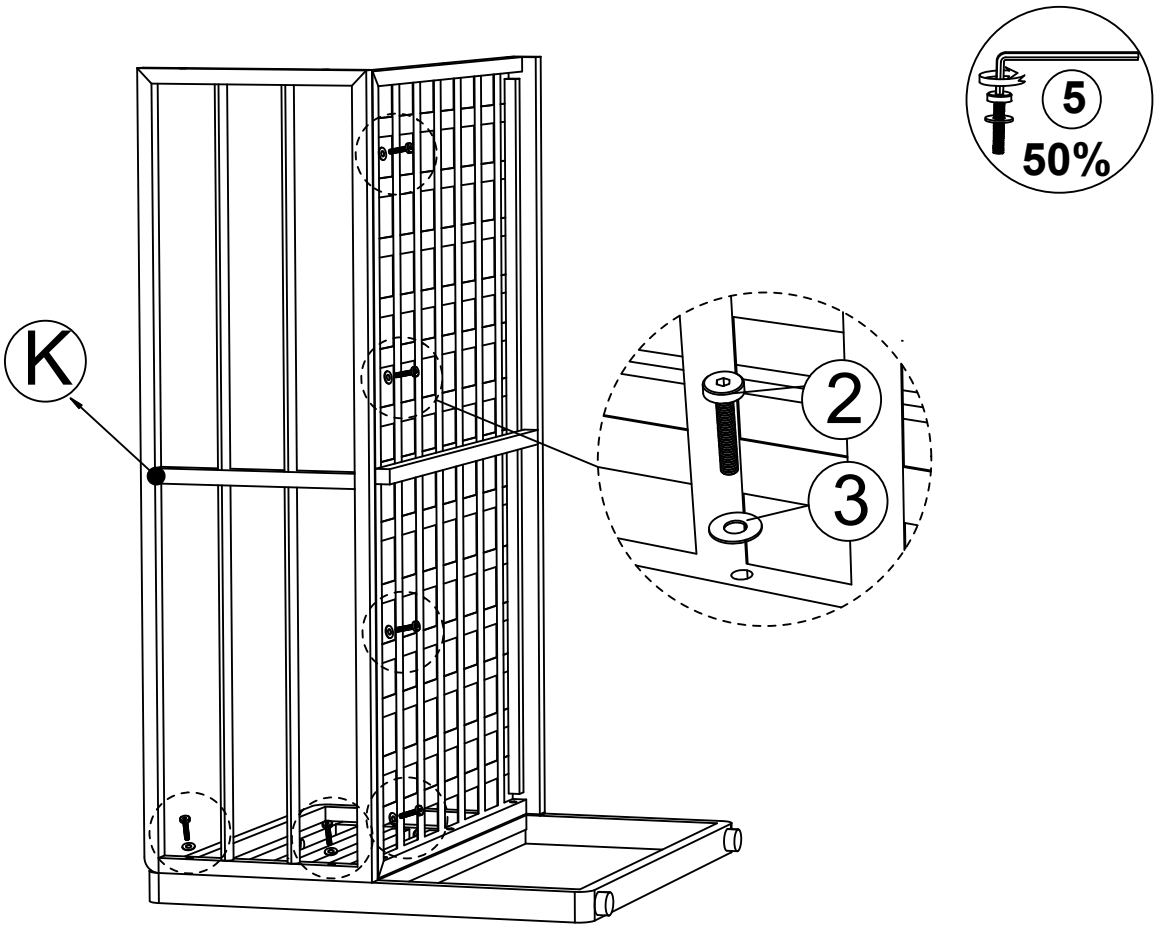

Connect the part from Step 8 & Right Bench-2 Back (K) by tighten Bolt (2), Flat Washer (3) with Allen Key (5).

STEP 10

D x1

② x5

③ x5

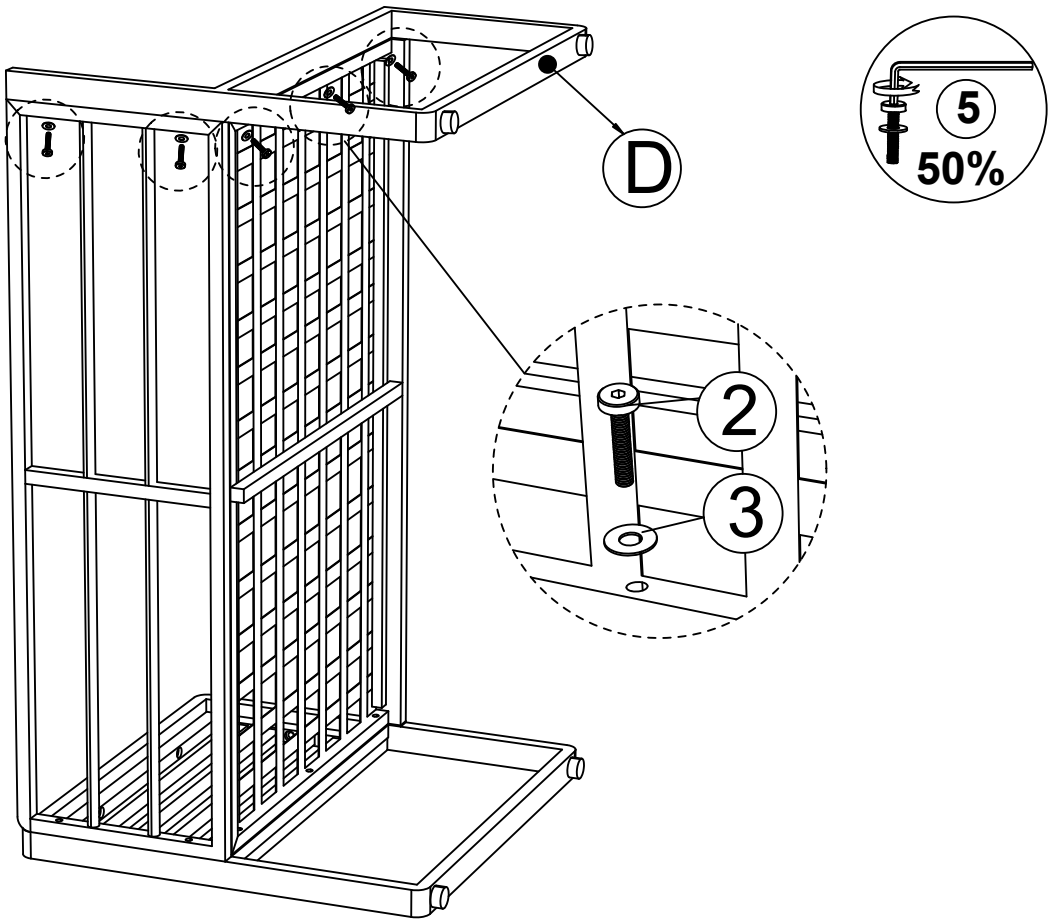

Connect the part from Step 9 & Left H-Shape Leg (D) by tighten Bolt (2), Flat Washer (3) with Allen Key (5).

STEP 11

④ x4

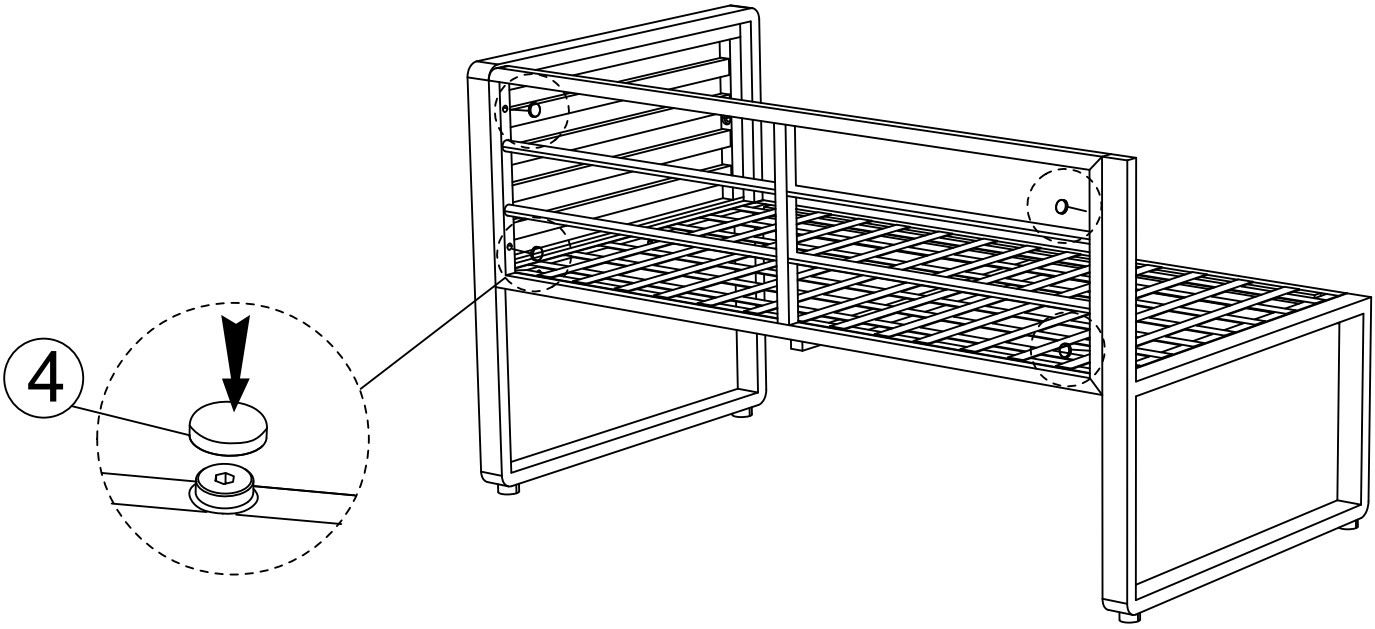

Firmly, tighten all Bolts and put the Bench upright. Push the Covers (4).

STEP 12

P x1

M x2

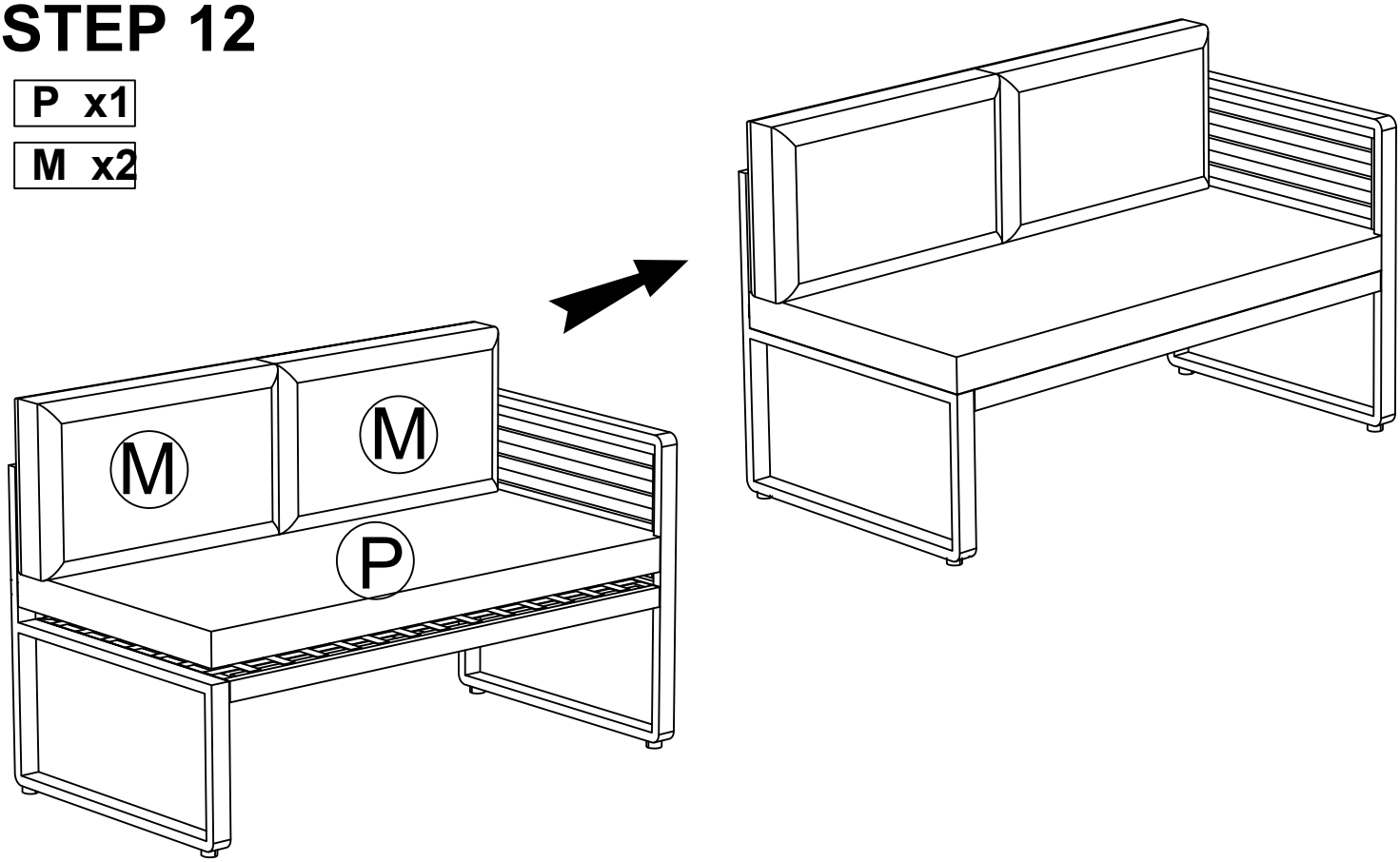

Set up the Cushion (M), (P) to finish the Right Bench.

STEP 13

J x1

H x1

② x3

③ x3

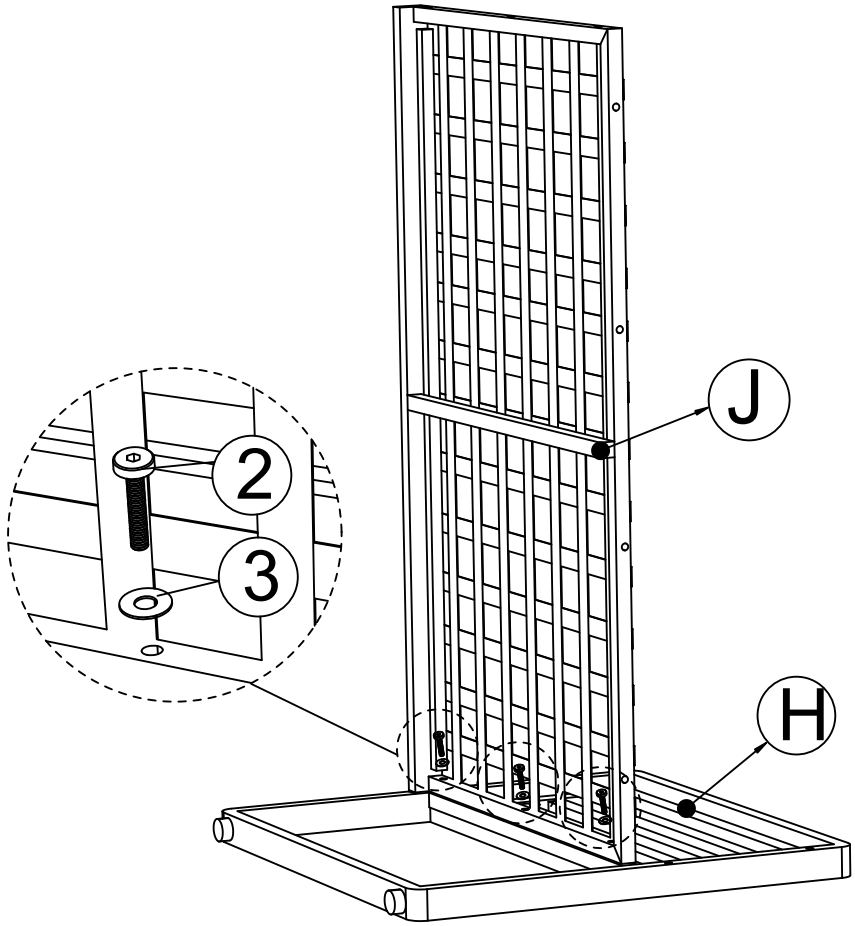

Connect Bench-2 Seat (J) & Left Armless (H) by tighten Bolt (2), Flat Washer (3) with Allen Key (5).

STEP 14

N x1

② x6

③ x6

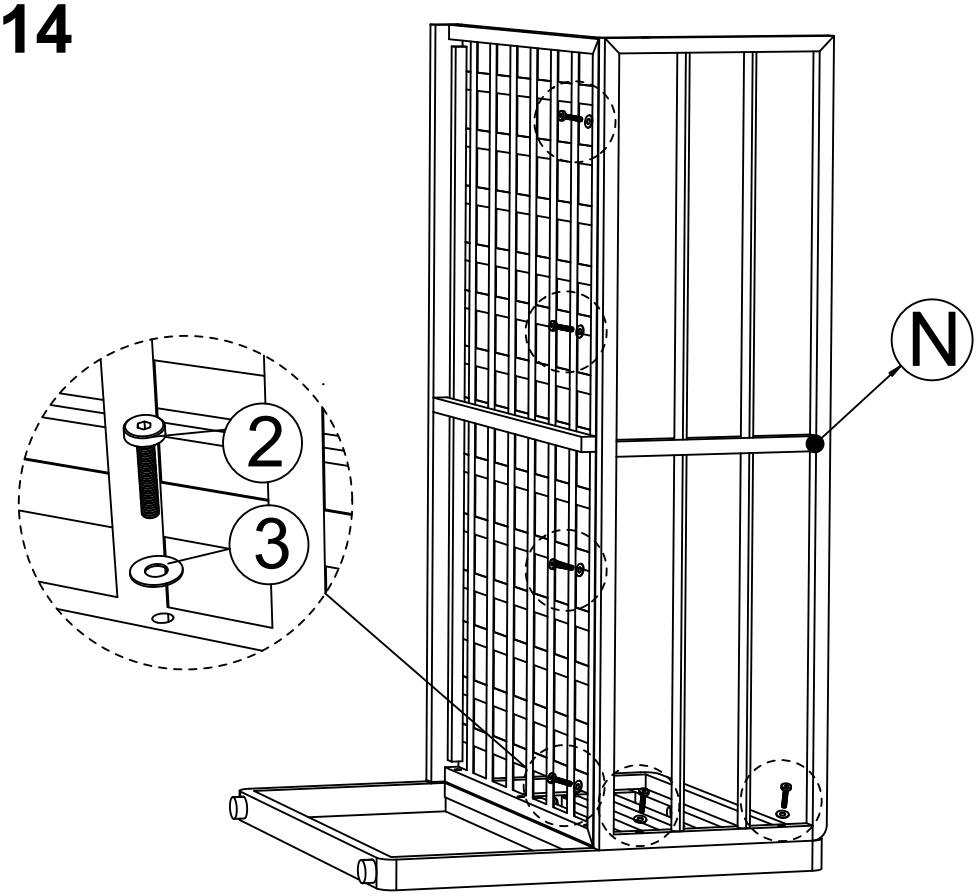

Connect the part from Step 13 & Left Bench-2 Back (N) by tighten Bolt (2), Flat Washer (3) with Allen Key (5).

STEP 15

C x1

② x5

③ x5

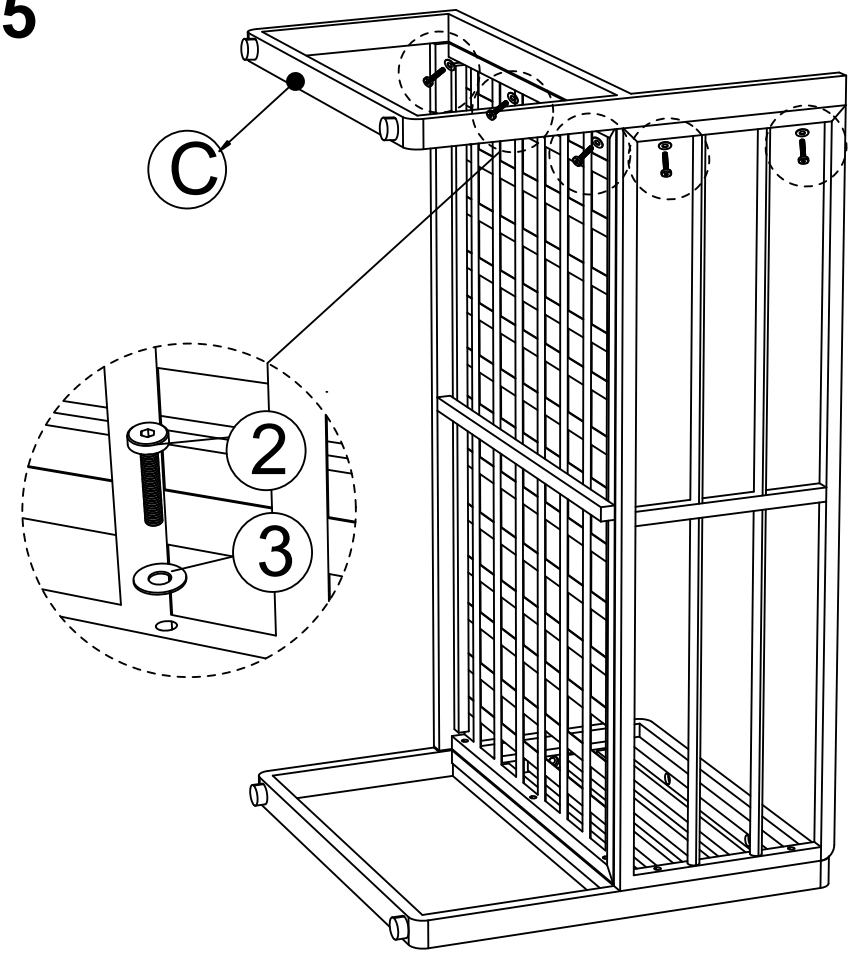

Connect the part from Step 14 & Right H-Shape Leg (C) by tighten Bolt (2), Flat Washer (3) with Allen Key (5).

STEP 16

④ x4

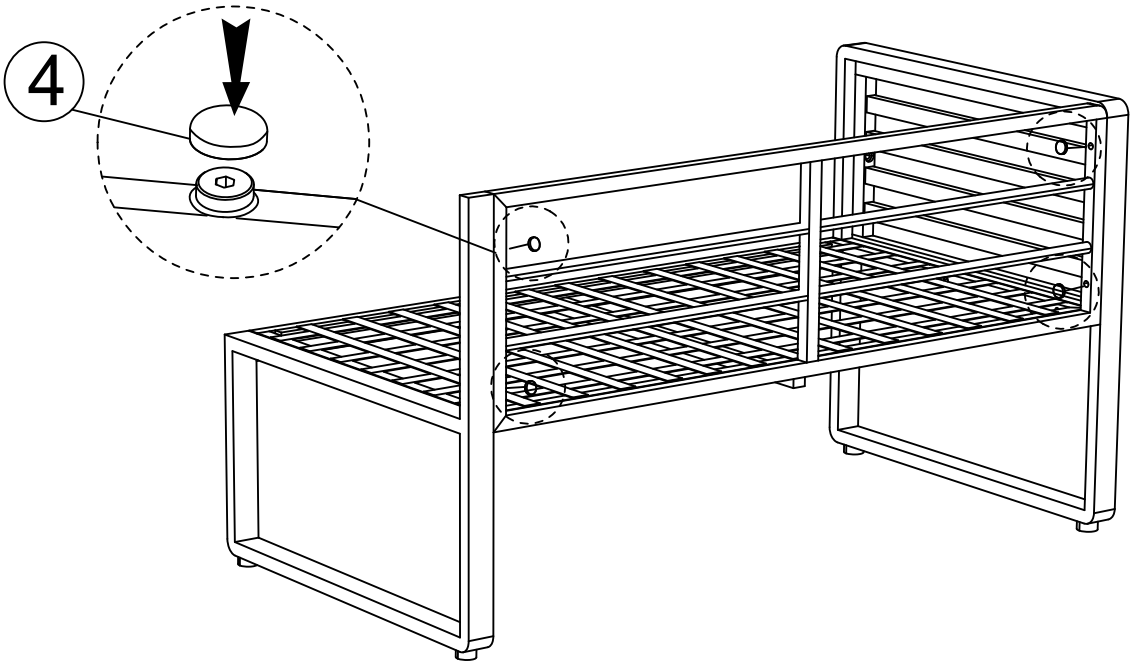

Firmly, tighten all Bolts and put the Bench upright. Push the Covers (4).

STEP 17

P x1

M x2

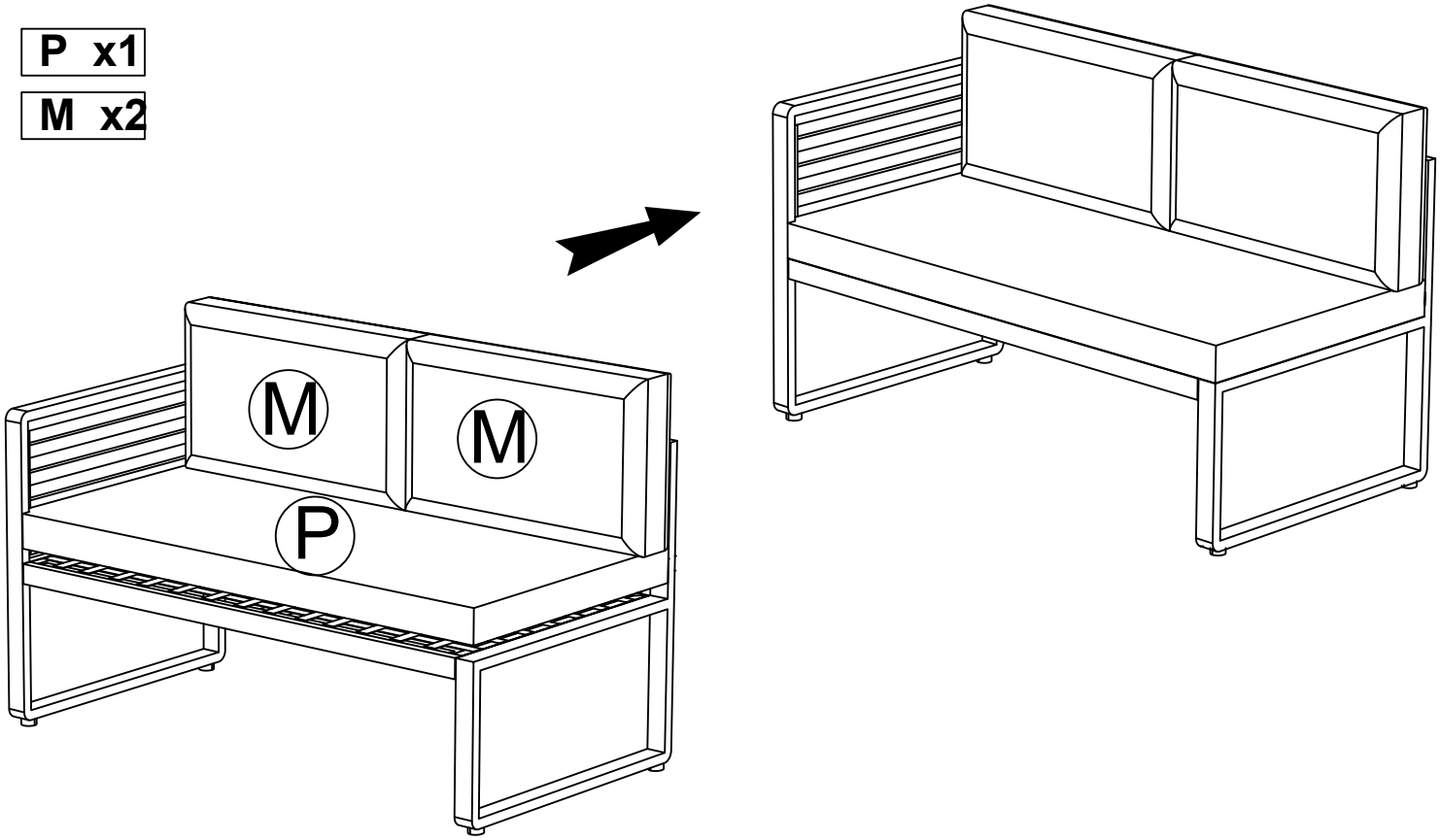

Set up the Cushion (M), (P) to finish the Left Bench.

STEP 18

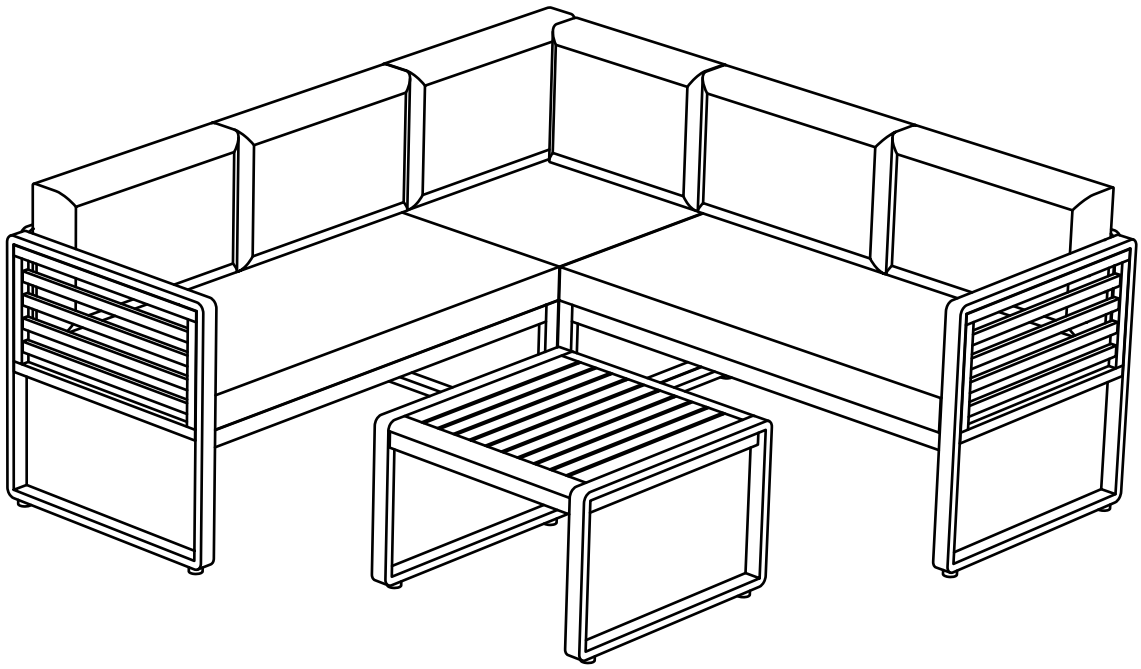

Finish the set