APP Control Applicable

INSTALLATION MANUAL

CEILING FAN WITH LIGHTS

Model No.: FS-5372M-20X

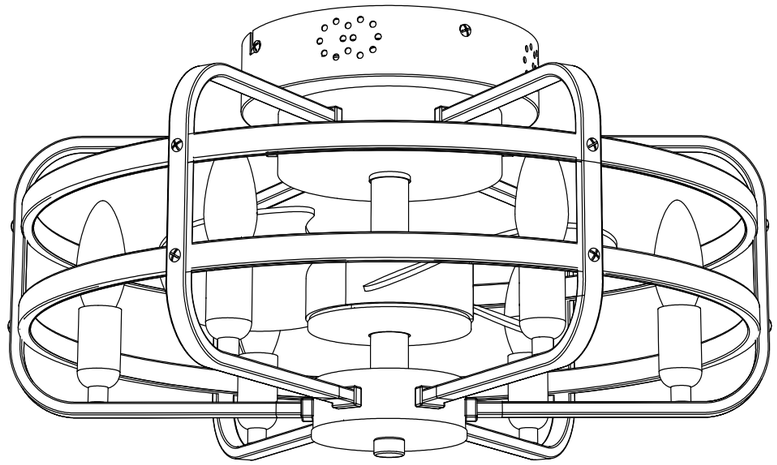

APP Control Applicable

TOOLS REQUIRED



Ladder

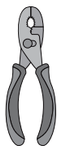

Pliers

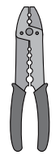

Wire Strippers

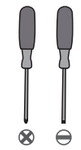

Screwdrivers

PACKING LIST

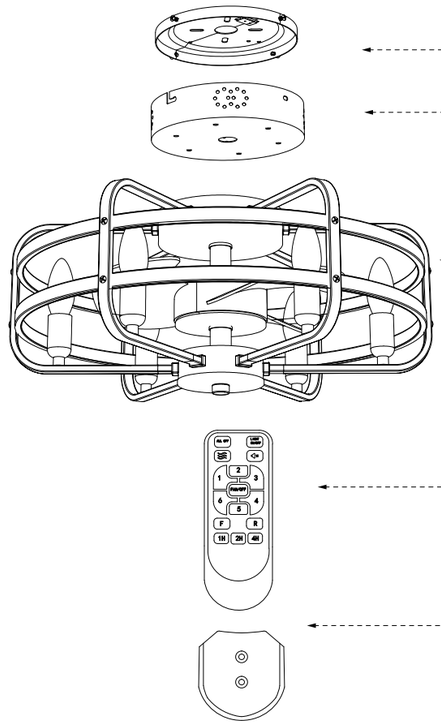

A Mounting Bracket ×1

B Canopy ×1

C Fan Assembly ×1

D Remote Control ×1

E Remote Holder×1

INSTALLATION KIT

AA 4×  Canopy Screw	**BB** 3× 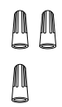 Wire Nut	**CC** 1×  Gloves	**DD** 1×  "S" hook
EE 4×  Wood Screw	**FF** 2×  Outlet Box Screw & Washer	**GG** 6×  Split Disk Screw	

Note:

1. Some extra hardware may be included. The quantity listed above is the number required for installation.
2. Some parts may be assembled together in the package.
3. AA is pre-installed on Bracket (A).

APP CONTROL INSTRUCTIONS

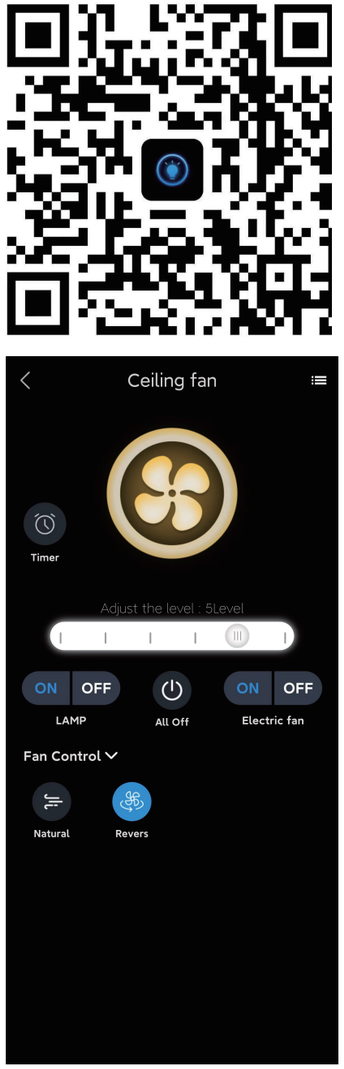

Note: Install the "Tiny Smart" app from Google Play, Apple App Store, or other app stores by scanning the QR code or searching for the app name.
Ensure that your phone is connected to the internet and Bluetooth enabled.

Pairing: Add device → Follow the APP operation to turn off the wall switch, and turn it on after 5 seconds. The device will automatically connect to the Ceiling Fan.

	Slide to adjust the Fan Speed.
	Turn on/off the light.
	Turn on/off the fan.
	Turn off the fan and light.
	1H-8H for timing the fan.
	Natural Wind: Simulate natural wind and automatically adjust the wind speed.
	Fan forward & Fan reverse.

REMOTE CONTROL INSTRUCTIONS

1. Insert 2 batteries before using: AAA 1.5V battery x 2pcs (not included).
2. Mark and drill screw holes in the wall, and use wood screws (EE) to fix the remote holder (E) onto the wall.

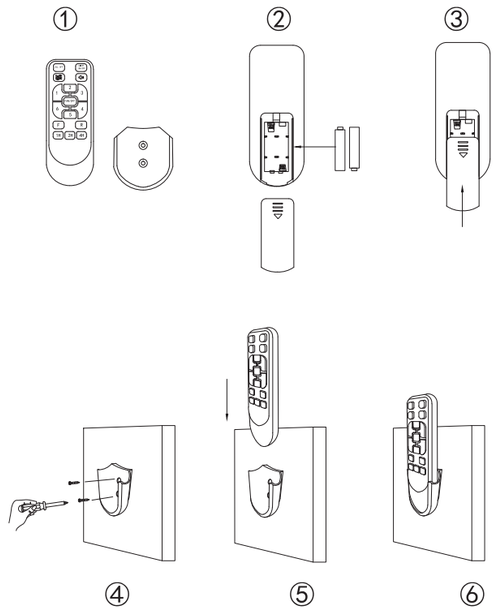

REMOTE CONTROL INSTRUCTIONS

NOTE:

Please insert 2 batteries tefore using.AAA 1.5V battery x 2pcs (not included)

①Tur off the light and fan.
②Turn on/off the light.
③Natural wind mode.
④Turn on/off the mute mode .
⑤ 1/2/3/4/5/6 for Fan speed.
⑥Turn off the fan (remote signal pairing).
⑦Fan forward.
⑧Fan reverse.
⑨1H-4H for timing the fan.

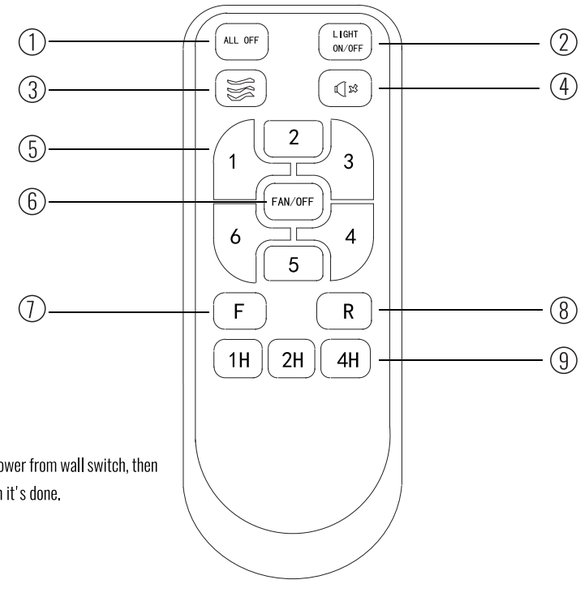

REMOTE S|GNAL PA|RING: |f the remote control looses the signa| of the fan, turn off the power from wall switch, then turn it on, press ⑥immediately for anund 3 seconds, after the fixture beeps or flashes, then it's done.

INSTALLATION

1. Separating Mounting Bracket

Step 1: Loosen the Canopy Screw (AA) from the Canopy (B), and take out the Mounting Bracket (A).

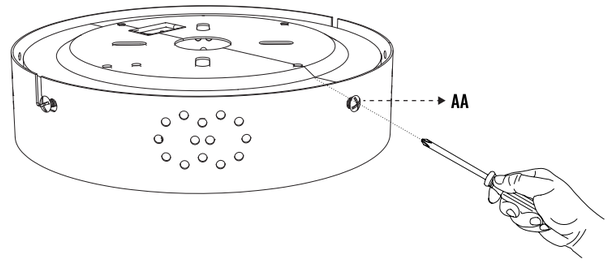

2. Installing the Mounting Bracket

Take off the screws from the oulet box, and secure the Mounting Bracket (A) onto the box with the screws taken off or Outlet Box Screw & Washer (FF).

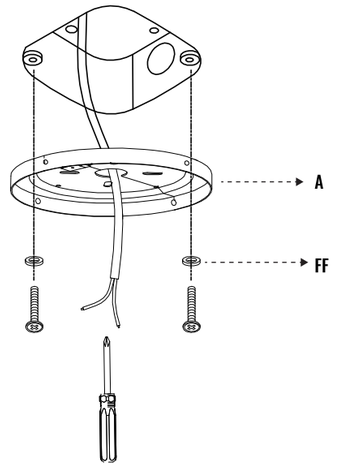

3. Install the bulbs

Install the E12 bulbs (not included) ×6, Max 40W each.

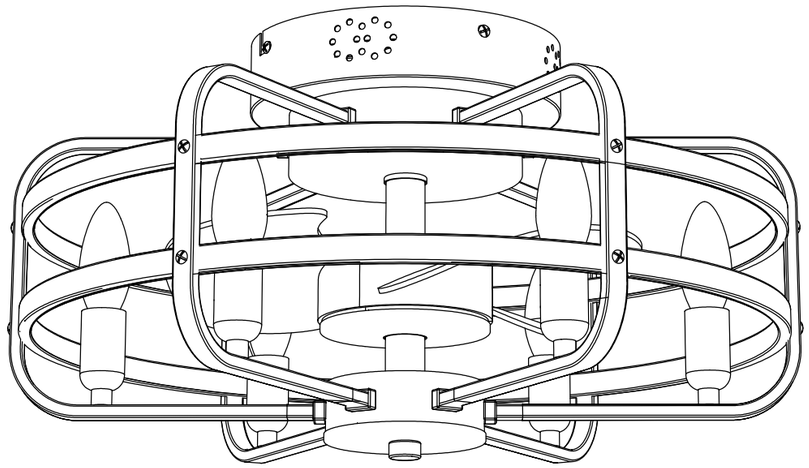

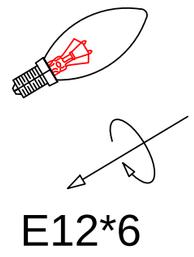

4. Installing the Canopy

Install the Canopy (B) onto the Fan Assembly (C) with the Split Disk Screws (GG).

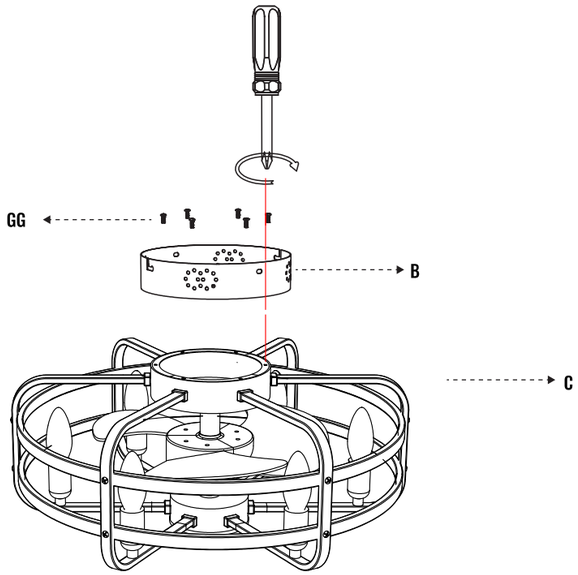

5. Hanging

Hang the fixture (C) onto the Mounting Bracket (A) with "S" hook (DD).

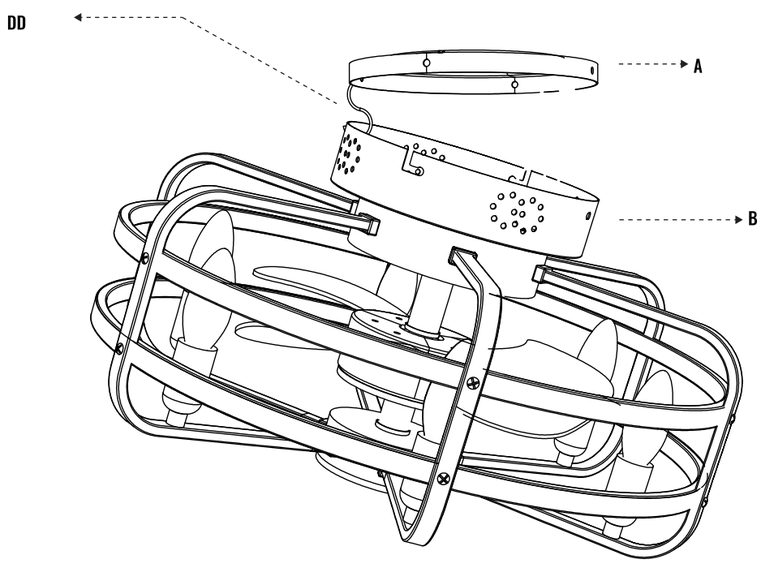

6. Wiring

Step 1: Wrap the ground wire from the outlet box around the Ground Screw on the Mounting Bracket (A), and then connect the ground wire from the fixture to the ground wire from the outlet box.

Step 2: Connect the wires with the Wire Nut (BB) from the fixture to the house supply wires, neutral (white) to neutral wire, and hot (black) to hot wire.

Step 3: Spread apart the wires so that the hot wires are on one side of the outlet box and the neutral wires are on the other.

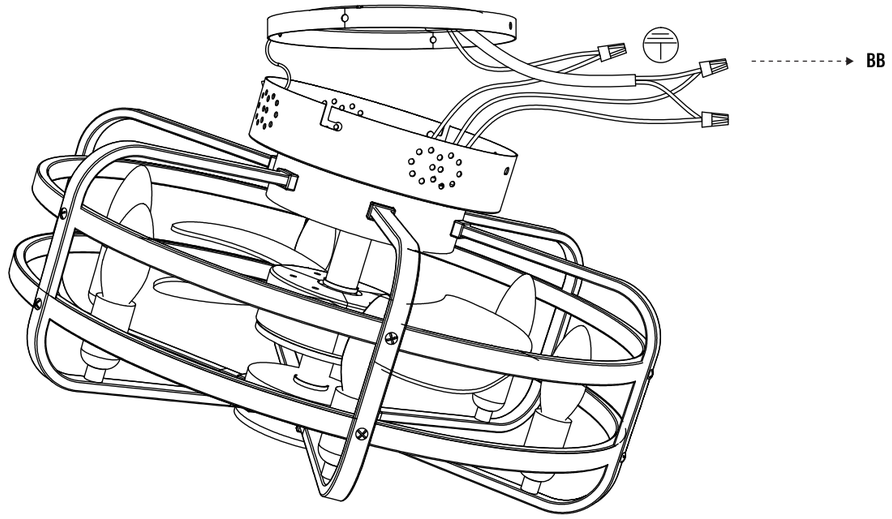

7. Attach the Canopy

Step 1: Take away the "S" hook (DD).

Step 2: Align the "L" slots from the canopy to the canopy screws (AA) on the mounting bracket (A) , rotate the canopy to lock it onto the mounting bracket (A). Tighten the canopy screws (AA).

