# Instruction Manual

## To Consumer

. Please read this notice carefully and keep it all along the use of this product. Follow the instructions for a safe and correct installation and functioning of the fitting.

. The manufacturer does not accept any responsibility for damage caused by improper installation and service.

## Warm reminds

. Always isolate the power before commencing installation, maintenance or repair.In case of doubts, please contact a qualified electrician.

. This product is for indoor use only. Please do not use it on humid places. Do not put it in contact with water or any liquids or inflammable products. Always respect the minimal distance to inflammable products.

. During installation, make sure that the cables will not be squeezed or damaged by sharp edges.If the external cable is damaged, it needs to be replaced exclusively by the manufacturer,his service agent, or another qualified electrician.This is to avoid all risks.

## Part and Installation instruction

Step 1.1 Connecting the wires of power.

1.2 Installing the metal canopy to the ceiling, and set up the wattage and color temperature as you prefer.

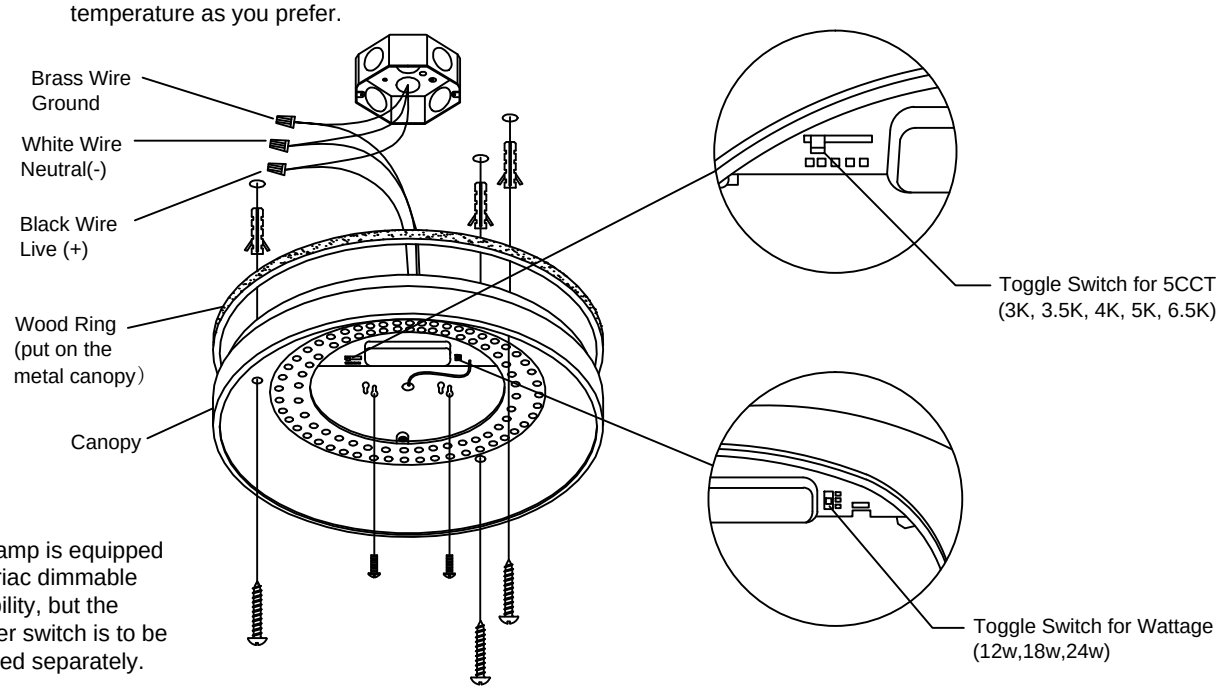


This lamp is equipped with triac dimmable capability, but the dimmer switch is to be supplied separately.

Step 2 Bending the acrylic plate a little bit, then insert the canopy.

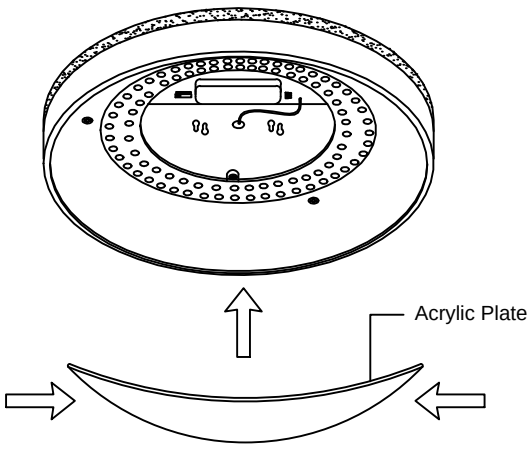


Step 3 Power-on test the lighting fixture.

