ASSEMBLY INSTRUCTIONS

(English)

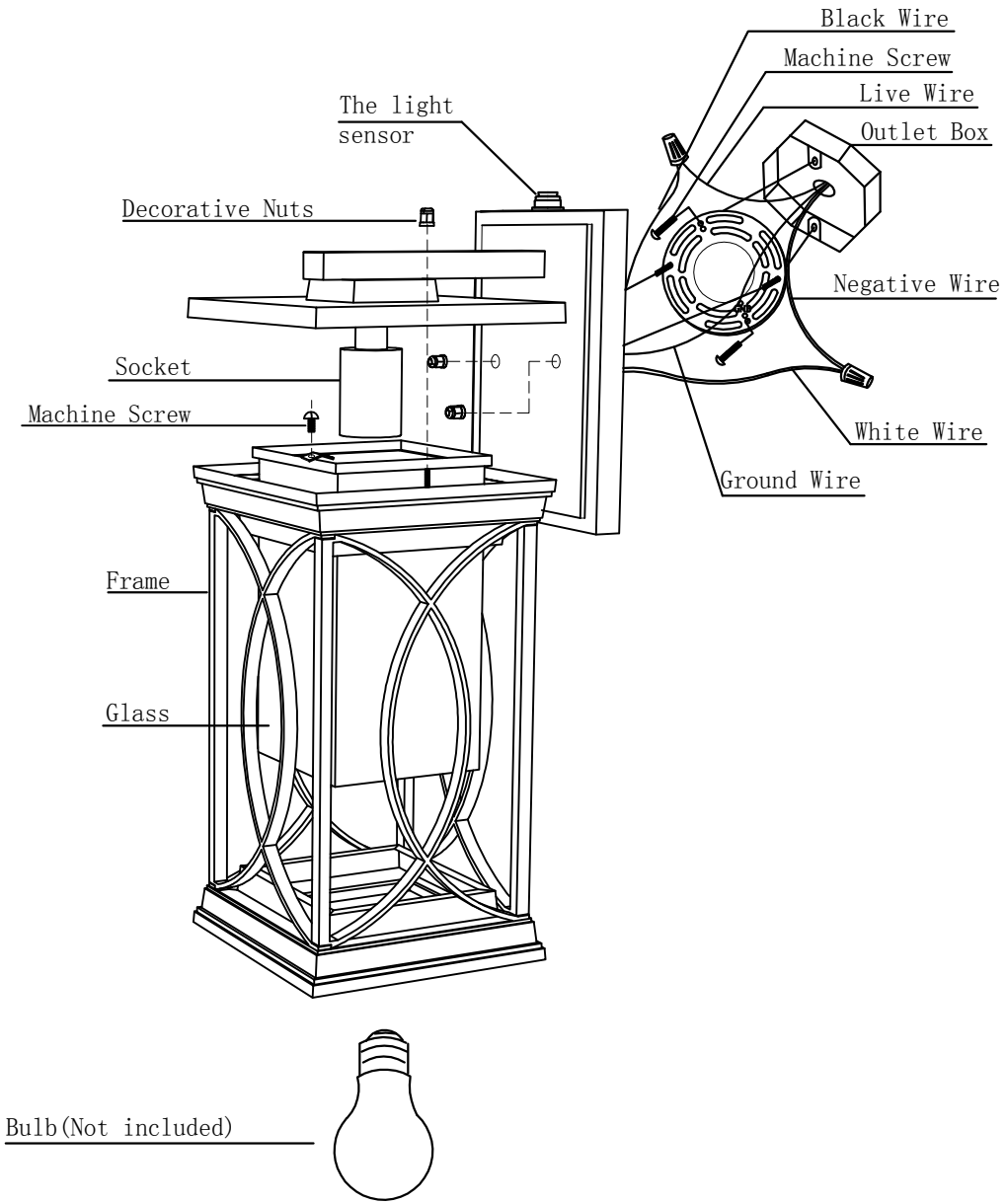

READ & SAVE
INSTALLATION & OPERATION INSTRUCTIONS

TOOLS & MATERIALS REQUIRED

- Screwdriver
- Wire Cutters
- Adjustable Wrench
- Wiring Supplies

CAUTION

Prior to assembly, refer to **ELECTRICAL CONNECTIONS** section. If you do not have electrical wiring experience, refer to a do-it-yourself wiring handbook or have your fixture installed by a qualified licensed electrician.

GENERAL

1. Be sure to read these instructions and review the diagrams thoroughly before beginning.
2. Electrical connections must be in accordance with local codes, ordinances, or the National Electric Code. If you are unfamiliar with methods of installing electrical wiring, secure the services of a qualified licensed electrician.
3. Before starting the installation, disconnect the power by turning off the circuit breaker or by removing appropriate fuse at fuse box. Turning the power off at the light switch is not sufficient to prevent electrical shock.

PREPARE THE FIXTURE
NOTE: First turn off electricity.

1. If replacing an existing fixture, disconnect and remove old fixture. Expose the supply wiring from outer fixture.
2. If your fixture is supplied with three machine screws, thread the long machine screws into the opposite side of outer fixture. While supporting the fixture, make electrical connections.

ELECTRICAL CONNECTIONS 120V ~, 60Hz

Connect white wire(s) from fixture to white neutral wire from supply circuit. Connect black wire(s) to black hot wire from supply circuit. Connect green wire to green or bare wire or grounding screw on mounting bracket. In all cases grounding conductor to earth must be used. Use UL/CSA Listed wire connects suitable for the size, type, and number of conductors. No loose strands or loose wires should be present. Secure wire connectors with UL/CSA Listed electrical tape.

FINAL ASSEMBLY

1. Spread electrical splices so black wires are on one side of outlet box and white wires on the other.
2. Attach assembled unit to outer fixture by using three screws and brass nuts, or the threaded stem with nut provided.
3. Install light bulbs (not provided) and cover assembly. Some models employ a twist off top cap to allow access to bulbs.
4. **CAUTION**: Refer to the relamping label located near lampholder for recommended maximum wattage. Do not exceed recommended wattage.
5. Use weather resistant caulk to seal around top and side perimeter of fixture back plate. Leave bottom uncaused to allow for condensation evaporation.
6. Restore electrical power.