Installation and Operating Manual

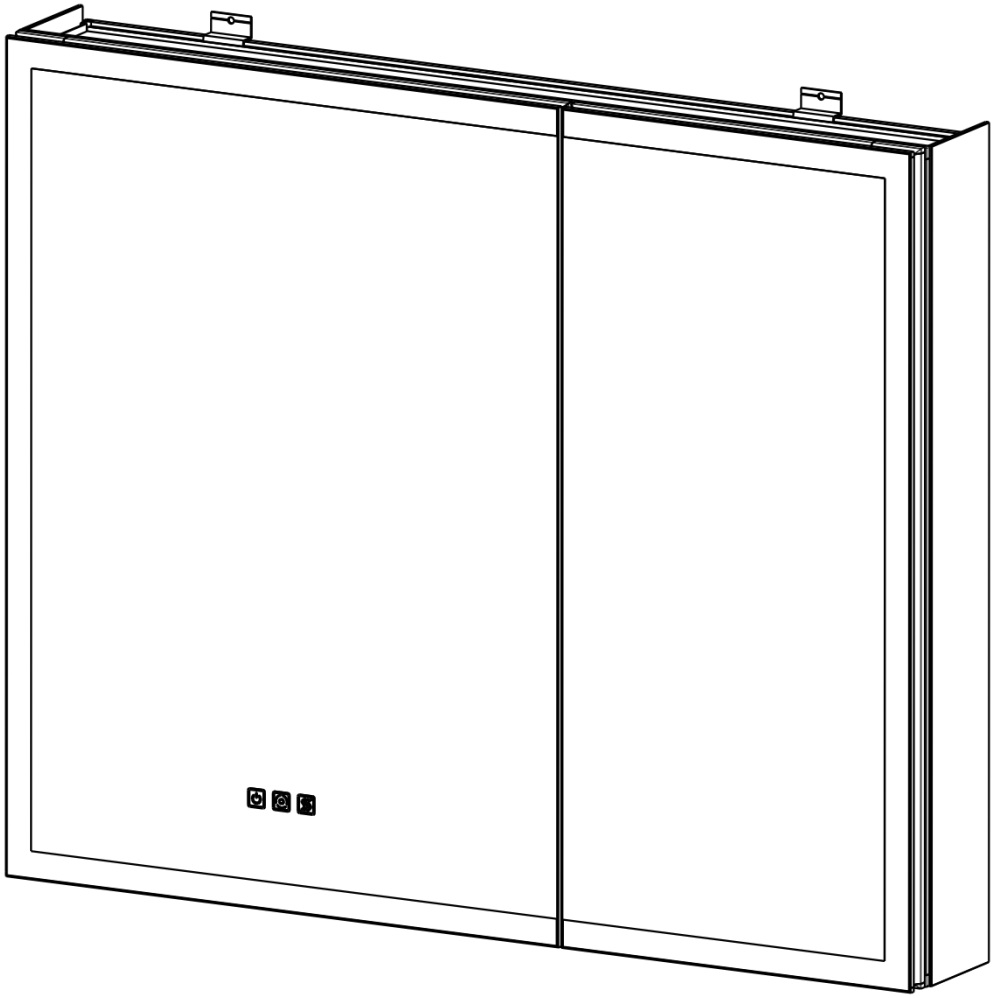

Model Specification

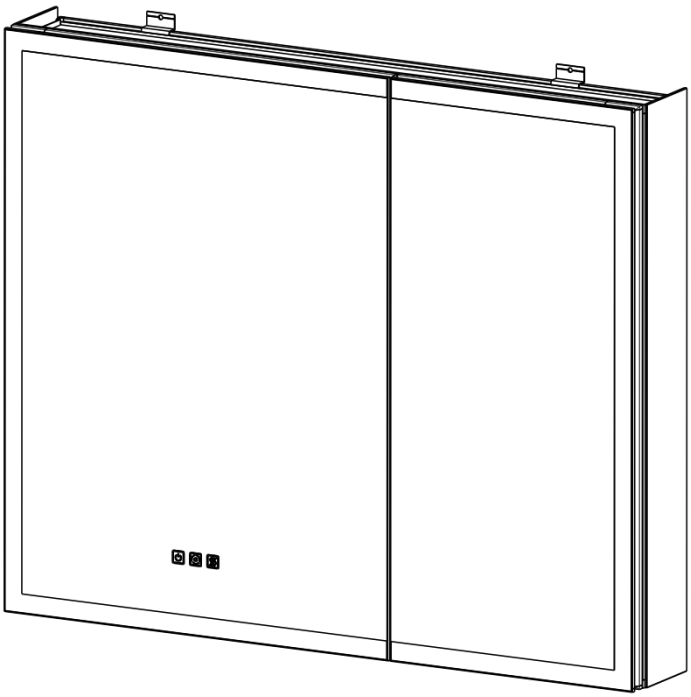

- Aluminum Frame
- Integrated LED
- Double Side Mirror
- Adjustable Shelves
- Quiet Hinge
- Recessed or surface mounting
- Color Temperature:3000-6500K
- Dimming
- Anti Fog

No.	Dimension	Color	Door Type	Remark
1	24"×30"	Silver	Single door Left or Right	
2	30"×30"	Silver	Double Door	
3	36"×30"	Silver	Double Door	
4	40"×30"	Silver	Double Door	
5	48"×30"	Silver	Triple Door	

Note

For easy and safe installation, please refer to the following:

Read all instructions thoroughly before installing the enclosed product. Read and take note of all **Safety Precautions**, care and maintenance information.

PLEASE KEEP THIS INSTRUCTION MANUAL FOR FUTURE REFERENCE DURING PRODUCT OPERATION AND MAINTENANCE.

WARNING AND SAFETY INSTRUCTIONS

Before installing your LED Medicine Cabinet, please make sure that you carefully read through this instruction sheet, refer back to them during installation to ensure your product is fitted safely and correctly. Keep the instruction for future use.

WARNING Risk of Fire and Electric Shock

●All fittings must be installed in accordance with current IEE wiring regulations. If in doubt, please consult a qualified electrician.

●Turn breaker off the electrical supply at the main circuit board before installation and maintenance.

●Suitable for indoor use only. This product should be positioned well away from curtains and fabrics. Never cover the mirror.

●Regularly check any parts for damage, if any part is damaged the product should not be used.

INSTALLATION SAFETY

●Inspect the product immediately upon receipt for any possible damage during transportation or missing parts. Handle the product with care and protect against knocks to all sides and edges of the glass.

●Ensure there are no hidden pipes or cables in the wall before drilling and sawing.

●Wear suitable safety glasses when drilling. Take care if drilling on tiled surfaces in case the drill slips.

CAUTION

The light source of this product is non-changeable light diodes (LED). Do not disassemble the product, as the light diodes can cause damage to the eyes.

NOTE:The important safeguards and instructions that appear in this manual are not meant to cover all possible conditions and situations that may occur. It must be understood that common sense, caution and care are factors that can't be built into any product. These factors must be supplied by the person(s) caring for and operating the fixture. Do not install this fixture in hazardous locations.

PARTS SUPPLIED

Bottom Mount Bracket
×1

Upper Mount Clip
×2

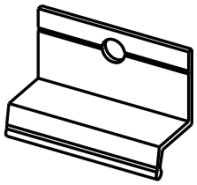

Anchors A
×1

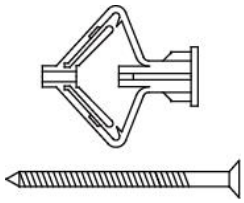

Shelf Clips (L)
×2~4

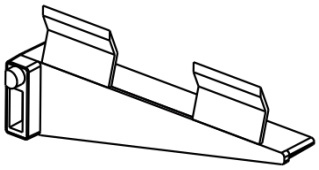

Shelf Clips (R)
×2~4

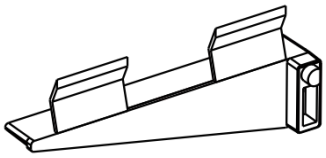

Wire Cap
×3

Shelves
×2~6

Anchor Screws
×5~10

Anchors B
×5~10

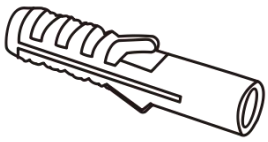

Hinge Covers
×2~8

Side Mirror
×2

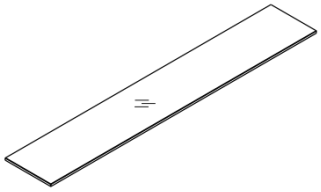

TOOLS REQUIRED

Drill

Pencil

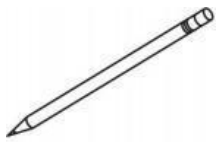

Level

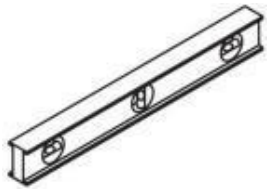

Tape

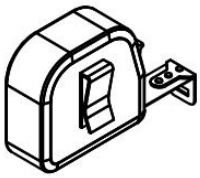

Gloves

Safety Glasses

Phillip Screw Driver

Drill Bit 8mm(5/16”)

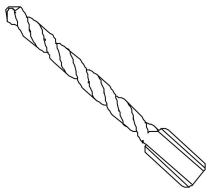

Hammer

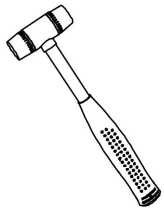

Installation Instruction

The medicine cabinet supports two installation methods: 1.Surface Installation and 2.Embedded Installation.

Please choose the installation way as needed.

Some cabinet doors will be separated from the cabinet to reduce packaging volume. Please install the cabinet door after completing the cabinet installation according to the instruction.

Before installing the medicine cabinet, please remove the cabinet doors first. This will make the installation easier and more convenient.

1. First, disconnect the wires from the cabinet doors.

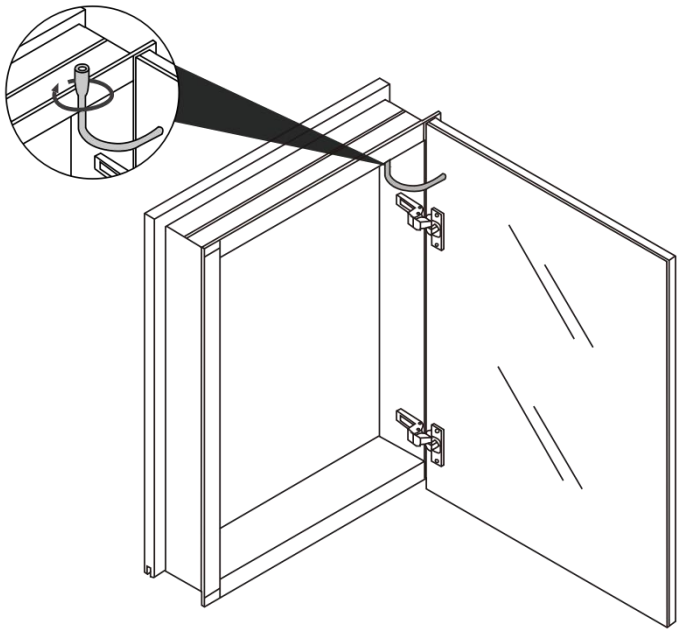

2. Then, press the end of the hinges and detach the cabinet door.

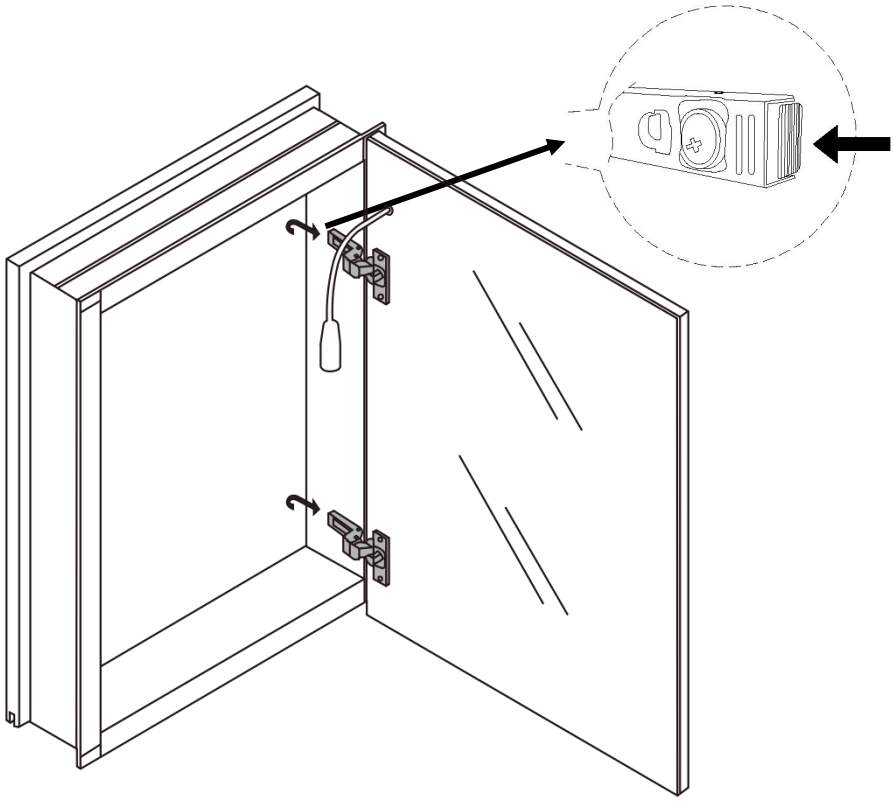

Surface Installation Instruction

Place the medicine cabinet against the wall and mark the placement of the cabinet. Draw a line on the wall with a level and marker to indicate where the cabinet bottom is.

Attention: Please hang the cabinet at least 3 inches above the faucet.

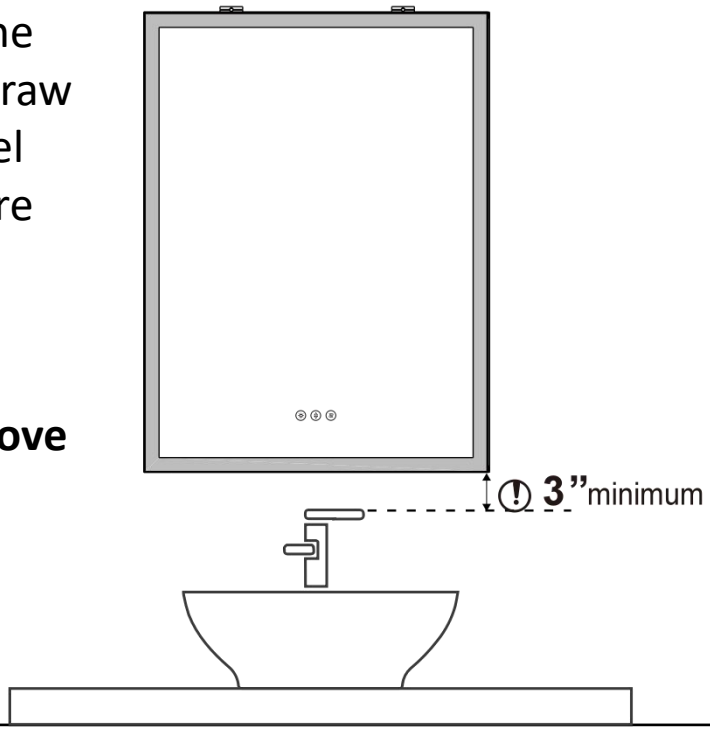

STEP 1

Bottom mounting brackets must be attached to furring strip/channel or wall studs

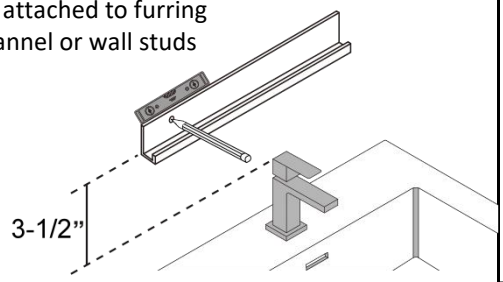

STEP 2 Mark spots for the bottom bracket.

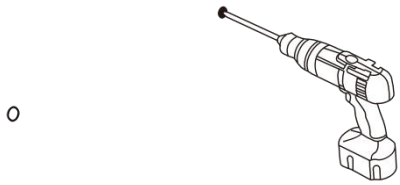

STEP 3 Drill holes in the wall.

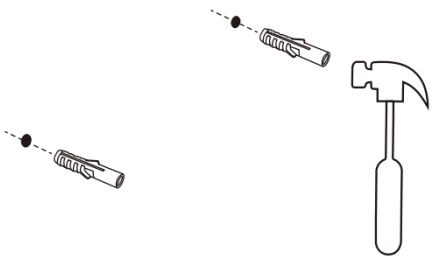

STEP 4 Plug the plastic anchors into the holes.

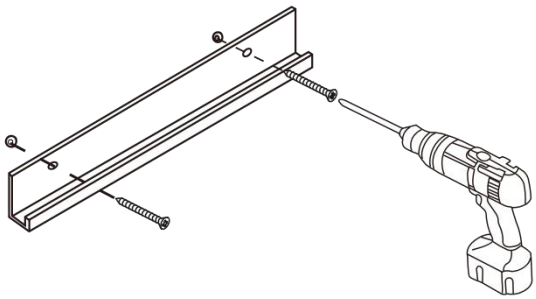

STEP 5 Fasten the mounting bracket to the wall.

Surface Installation Instruction

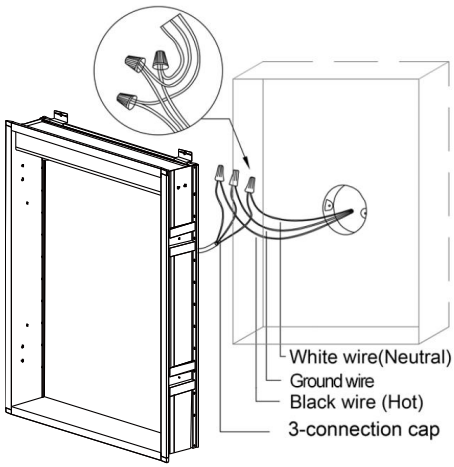

STEP 6

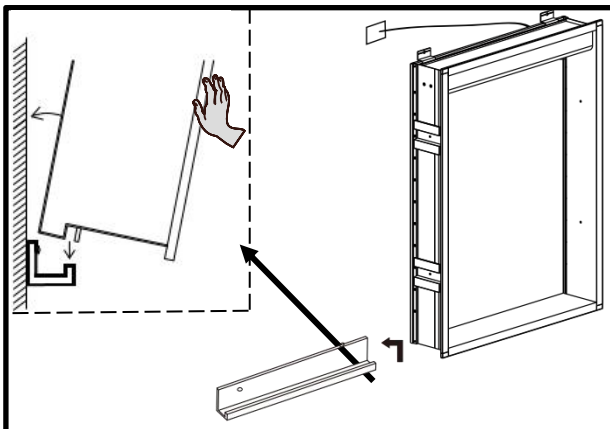

Lift the cabinet onto the mounting bar. Ensure the hooks engage the bar.

STEP 7

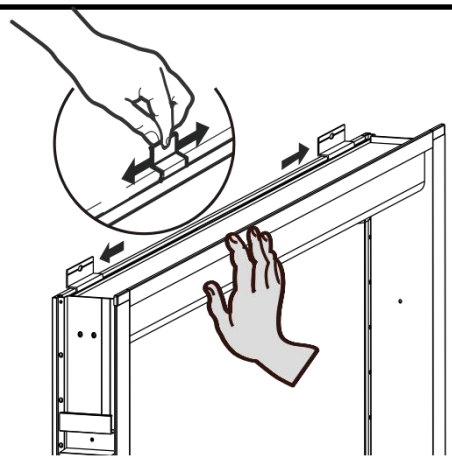

NOTE: Secure two upper brackets in the groove on top of the cabinet and mark the spots on the wall.

STEP 8

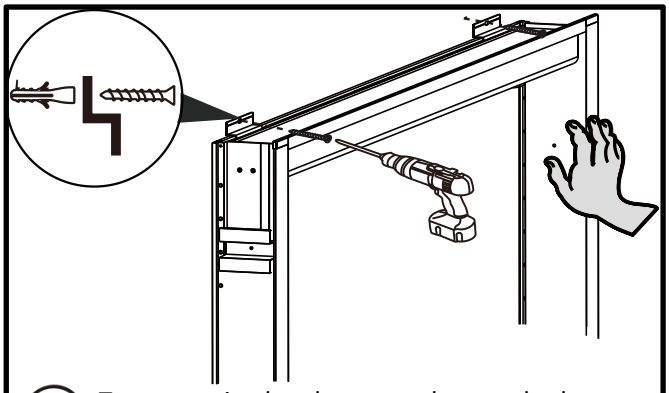

Top mounting brackets must be attached to furring strip/channel or wall studs.

Use an electric drill to punch holes at the marked spots, secure the upper brackets in the groove, and mount them to the wall with screws.

STEP 9

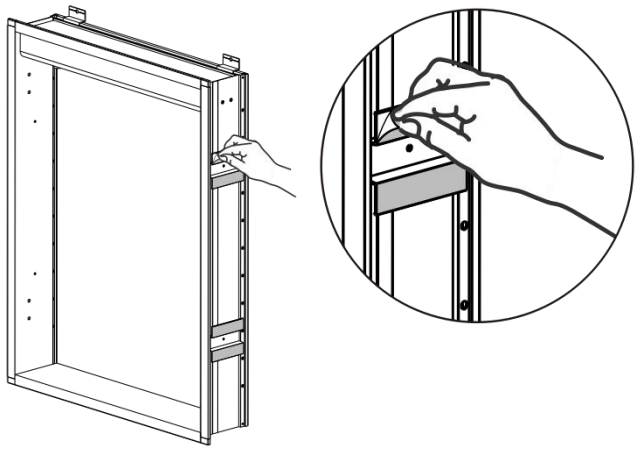

Remove the adhesive tape film on the side mirror brackets on both sides of the cabinet

STEP 10

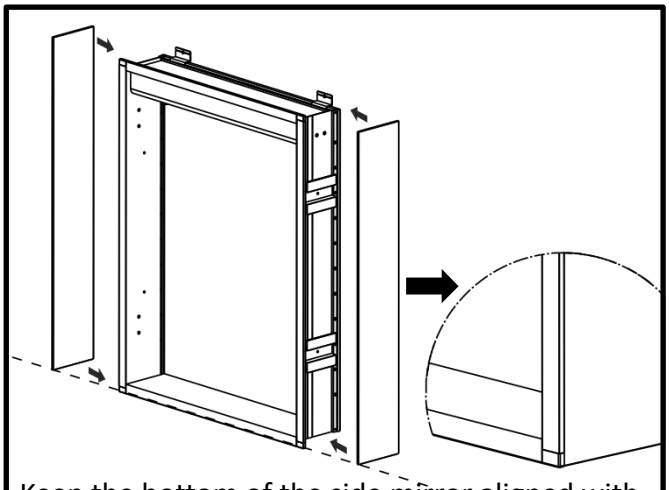

Keep the bottom of the side mirror aligned with the bottom of the cabinet, attach the side mirror to the side mirror bracket, and make sure the front end is close to the vertical edge

STEP 11

Surface Installation Instruction

Rules for Selecting Anchors

Anchors A

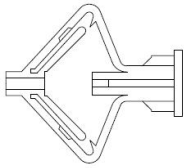

Installing on Drywall:

- Use Anchors A to ensure a secure installation on drywall.
- Anchors A are designed to provide adequate support on drywall.

Anchors B

Installing on concrete wall:

- Use Anchors B for a stronger installation.
- Anchors B are specifically designed for concrete wall, offering higher fastening strength on studs.

STEP 10

Insert clear snap-in shelf clips into holes on the sides of the cabinet.

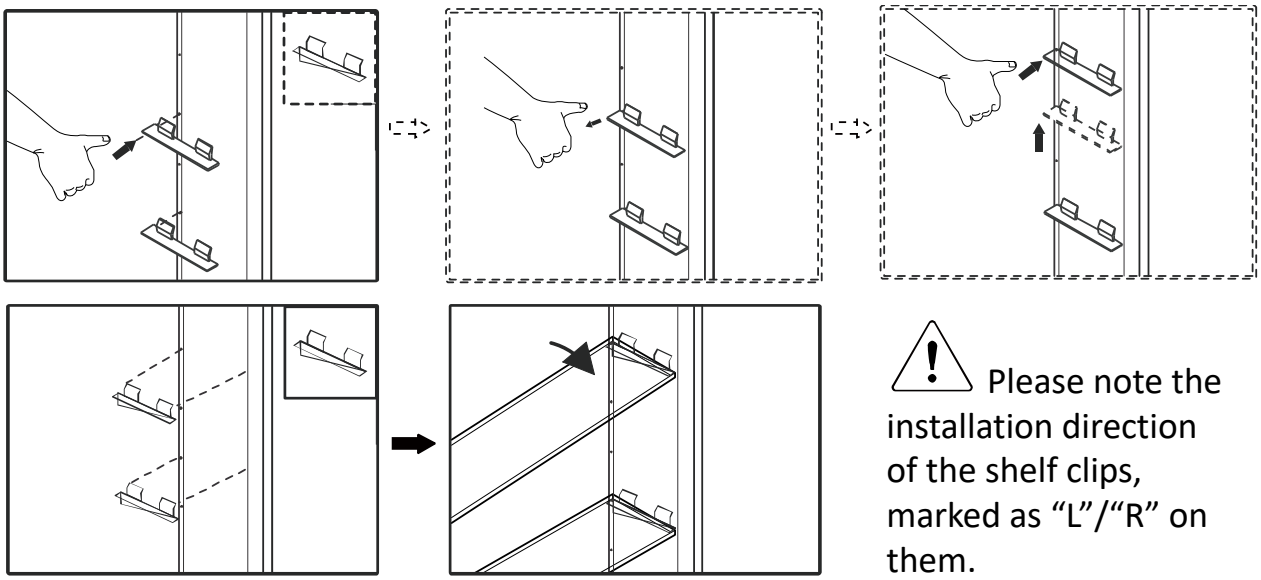

Please note the installation direction of the shelf clips, marked as “L”/“R” on them.

STEP 11

Step12：Cabinet Door Installation

1.Insert the hinges to the base ,then connect the doors with the cabinet

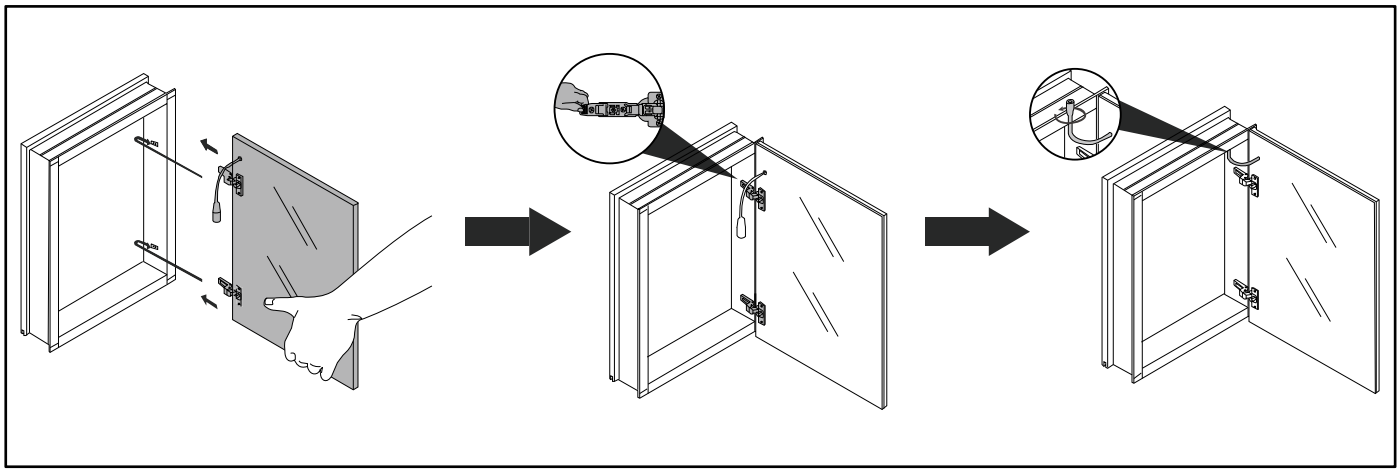

2. hinge adjustment

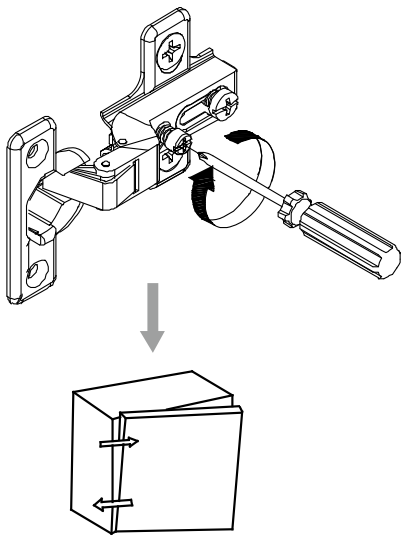	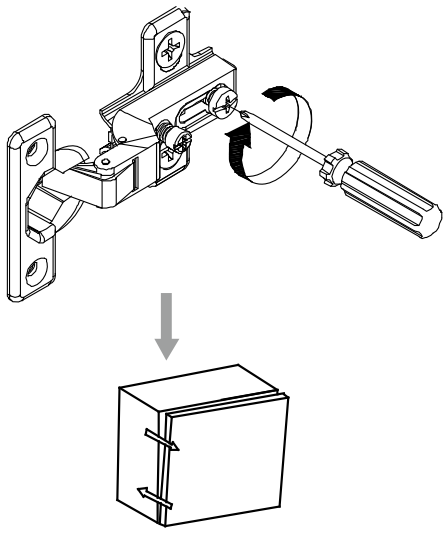	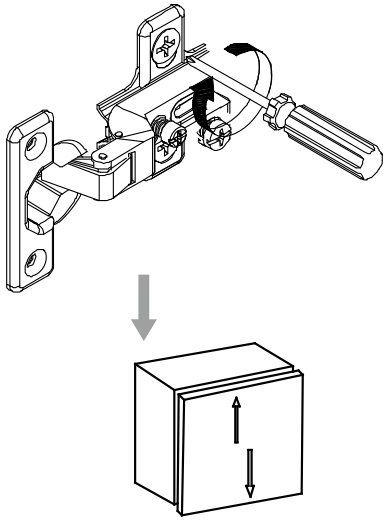
Turn the screw to adjust the depth of door overlay;	Turn the front screw to adjust the gap between the door and cabinet;	Turn the eccentric screw to release the door, allowing the door to be moved up and down.

Embedded Installation Instruction

Before installing, it is necessary to determine the opening size, which can be referred to in the table below.

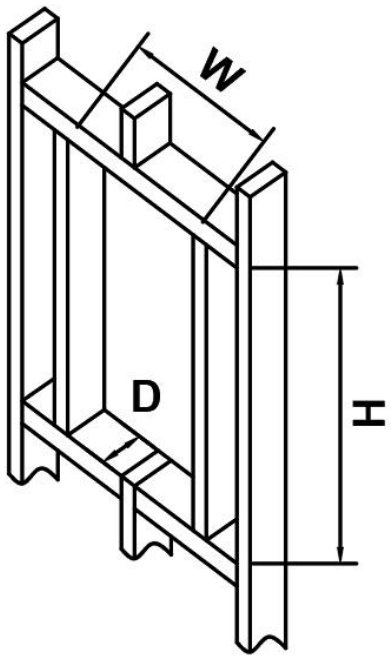

Actual cabinet		Wall opening dimensions for embedded installation all in Inches.		
No.	Dimensions	W（Width）	H（Height）	D（Depth）
1	24"×30"	23-1/4	29-1/4	4
2	30“×30"	29-1/4	29-1/4	4
3	36"×30"	35-1/4	29-1/4	4
4	40"×30"	39-1/4	29-1/4	4
5	48"×30"	47-1/4	29-1/4	4

Embedded Installation Instruction

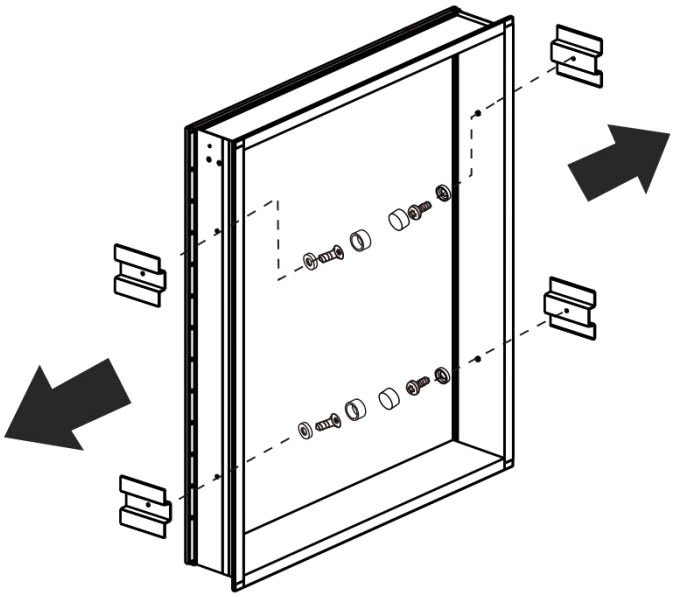

Carefully remove side mirror bracket panels for recess mount installation.

STEP 1

Determine the size of the opening

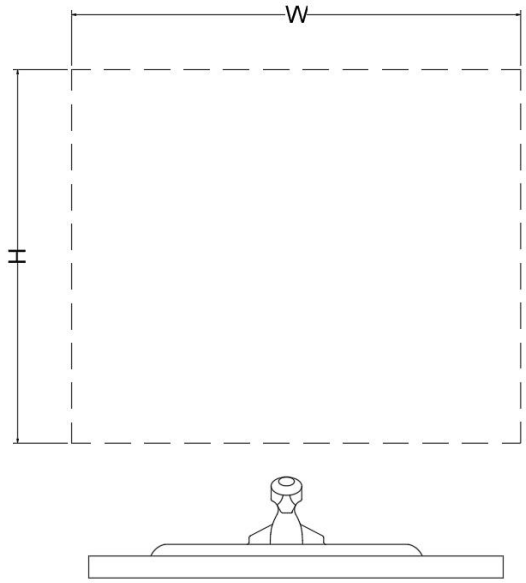

STEP 2

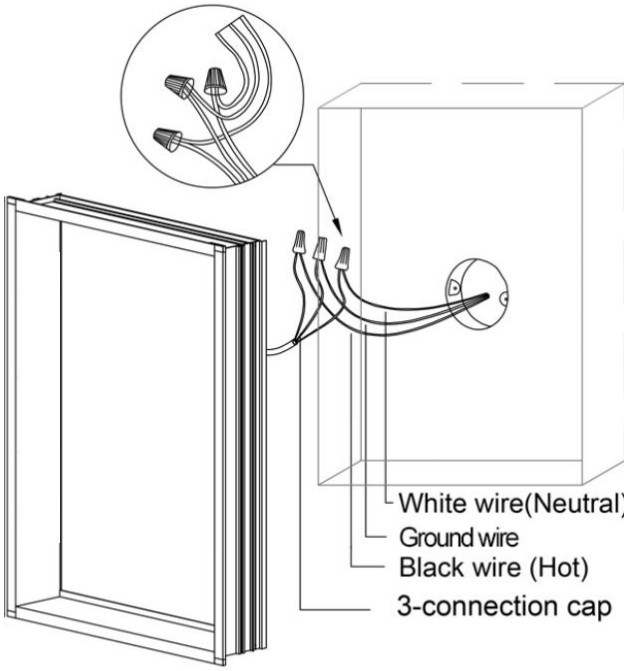

STEP 3

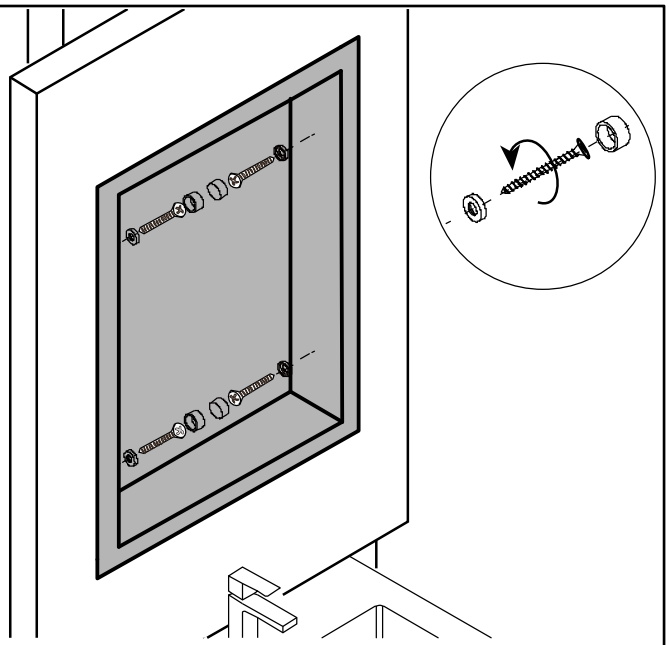

Secure the cabinet to the framing studs with screws.

STEP 4

*All diagrams are for reference only.All model dimensions and proportion position will vary.

Step5: Insert clear snap-in shelf clips into holes on the sides of the cabinet.

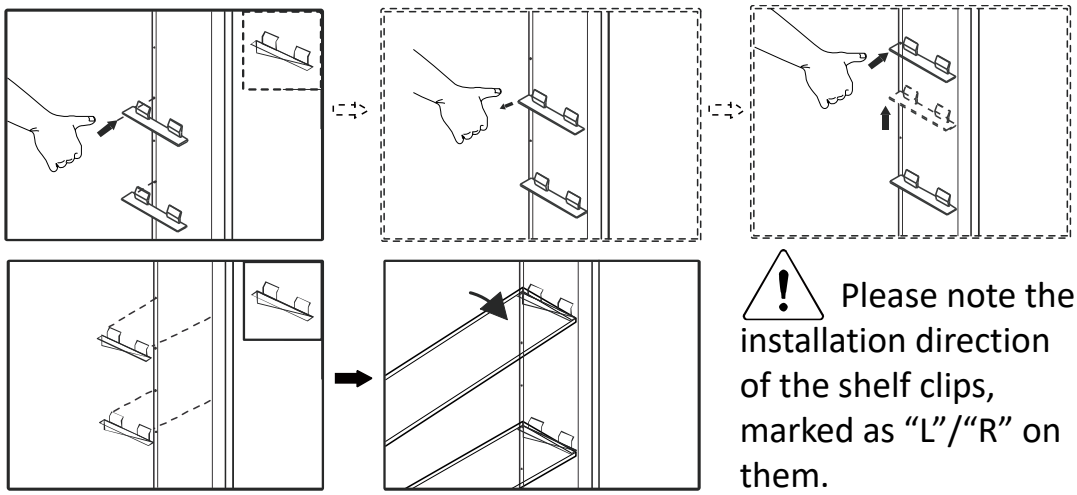

Please note the installation direction of the shelf clips, marked as “L”/“R” on them.

Step6：Cabinet Door Installation

1.Insert the hinges to the base ,then connect the doors with the cabinet

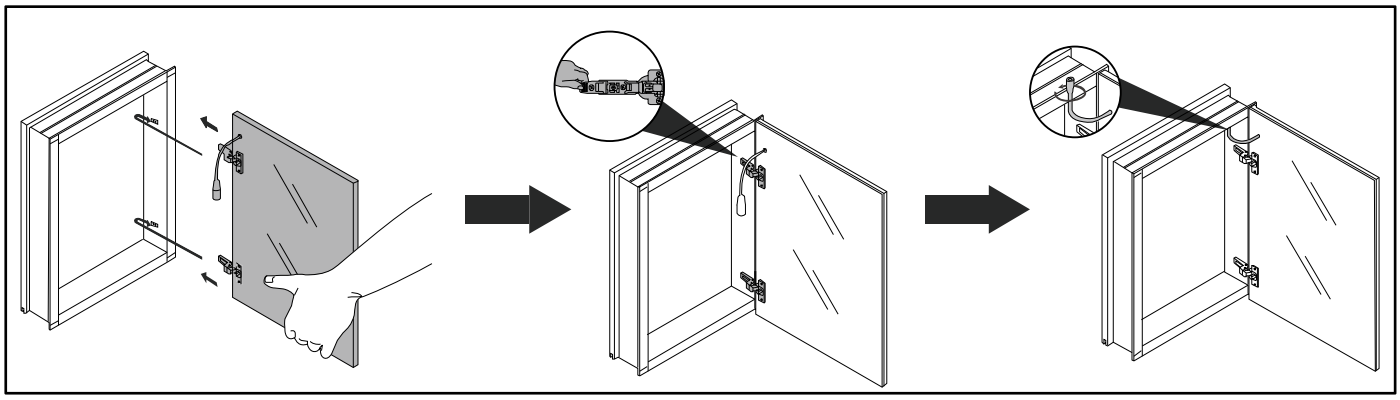

2. hinge adjustment

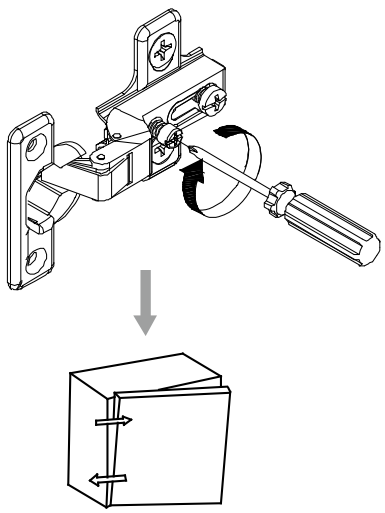

Turn the screw to adjust the depth of door overlay;

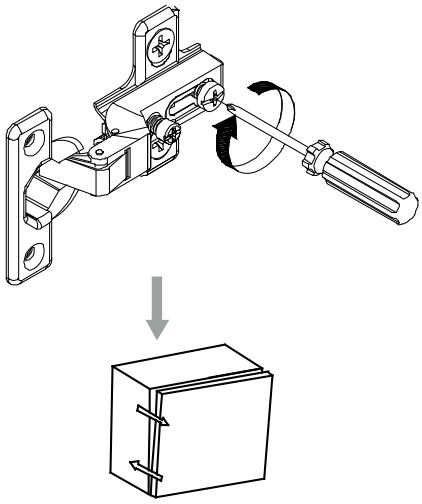

Turn the front screw to adjust the gap between the door and cabinet;

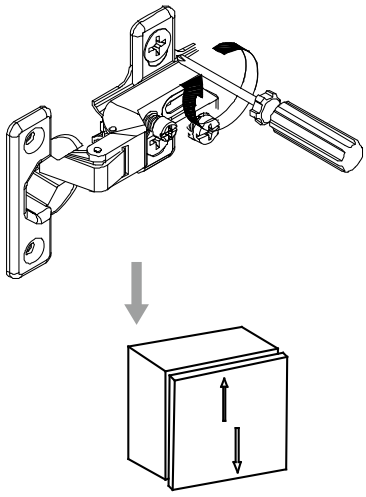

Turn the eccentric screw to release the door, allowing the door to be moved up and down.

Operating Manual

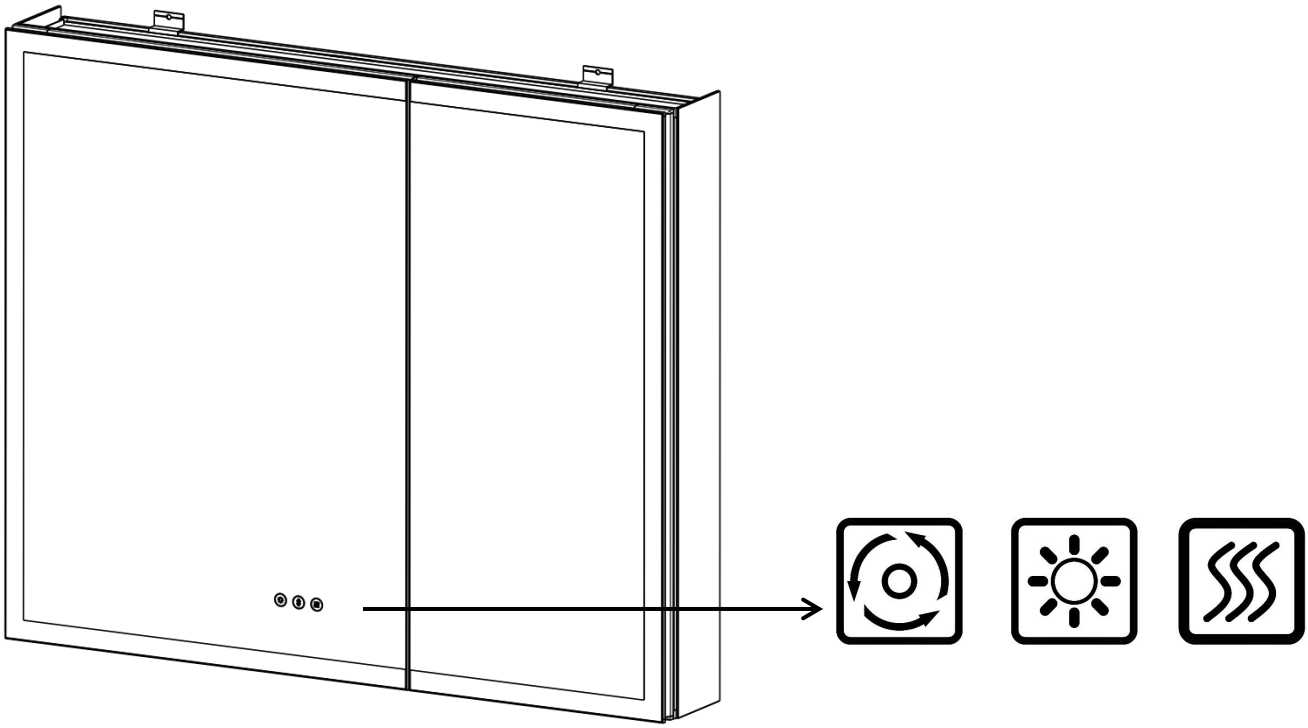

The buttons turn blue when connected to the main power supply and turn white after a brief touch.

- **Briefly touch the button to turn the mirror on or off.**
- **Press and hold the button to change the color temperature when the mirror is on.**
- **Optional to be wired to wall switch by ON/OFF memory function.**

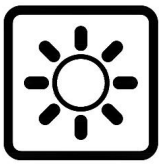

- **Briefly touch the button to turn the mirror on or off.**
- **Press and hold the button to adjust the brightness.**
- **Release the button when the brightness reaches your desired level**

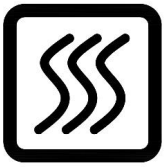

- **The mirror begins to warm up and defog after you press the defogger button.**
- **Press the button again to turn off the anti-fog function.**
- **Press and hold the button to turn the blue backlight on or off.**
- **Note: To prevent damage from prolonged high temperatures, the defogger will automatically stop after 60 minutes of continuous operation.**