OAKMET36ATQZ-DO

BATHROOM VANITY SET
SKU: OAKMET36ATQZ-DO

Colors/Finishes: OAK
Nominal Dimension:36W*22D*35H inches

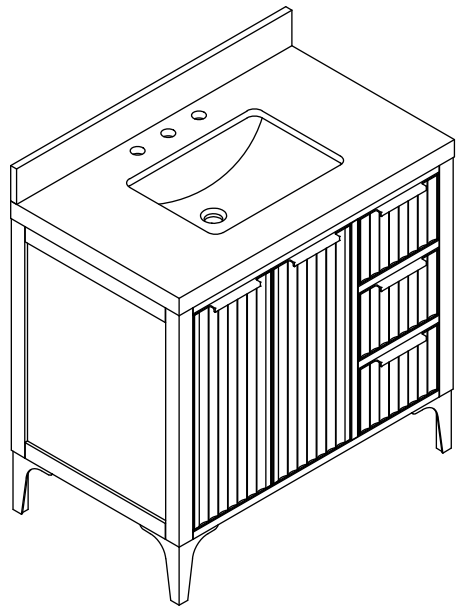

VANITY FEATURES:

1.Material: Oak wood frame, high-quality venner plywood.
2.Doors: 2 soft-close doors, Austria BLUM Soft-close hinges system.
3.Drawers: 3 soft-close drawers ,DTC concealed soft-close sliders.
4.Installation Type: Freestanding
5.Built-in Adjusters: Adjustable height levelers
6.Vanity Top: High-quality quartz with single undermount sink
7.Assemble required: No
8.Vanity top Included: Yes
9.Mirror Included: Optional
10.Medicine Cabinet Included: Optional

Contents

36″Vanity……PAGE2
36″Vanity Top……PAGE3
Vanity Installation……PAGE4

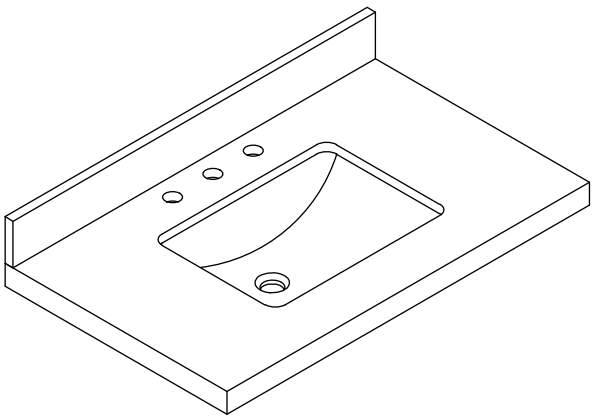

VANITY TOP FEATURES:

1.Material: Highly resilient, nonporous, scratch-and stain-resistant quartz.
2.Top Color: Calacatta quartz
3.Sink: 1*20”undermount rectangle sink
4.Faucet Holes: Top pre-drilled for 8”widespread faucet holes
5.Sink Certified: CUPC certified
6.Backsplash: 4”backsplash included
7.Faucet Included: No
8.Nominal Dimension(W*D*H): 36W*22D*2H inches

All dimensions and specifications are nominal and may vary.Use actual products for accuracy in critical situations.

OAKMET36ATQZ-DO

BATHROOM VANITY SET
SKU: OAKMET36ATQZ-DO

PRODUCT DIAGRAMS:

Front

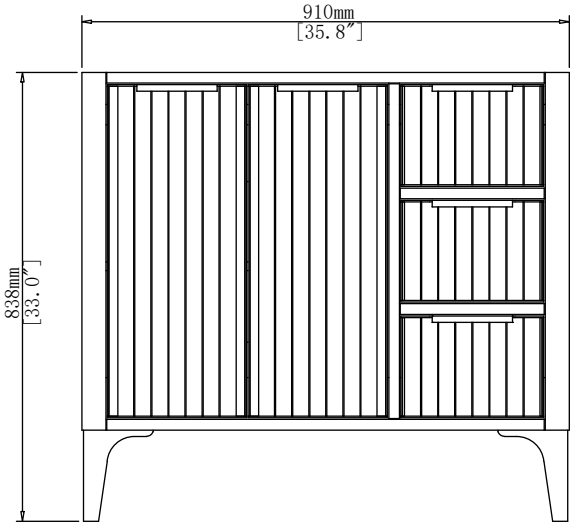

Back

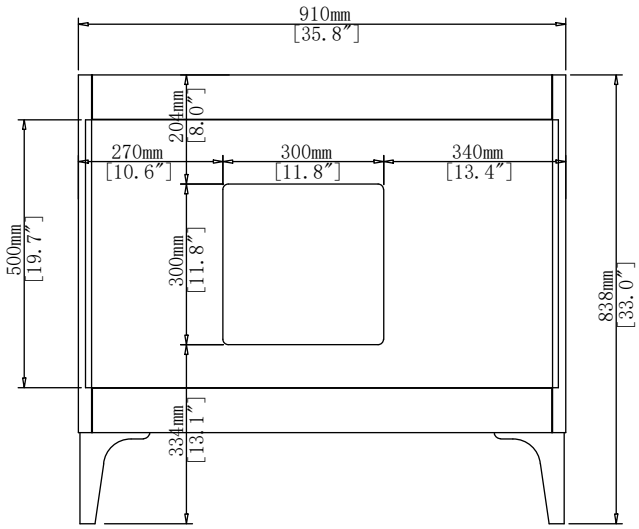

Top

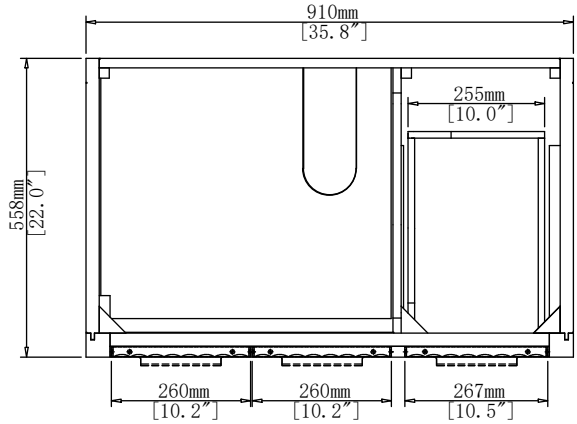

Side

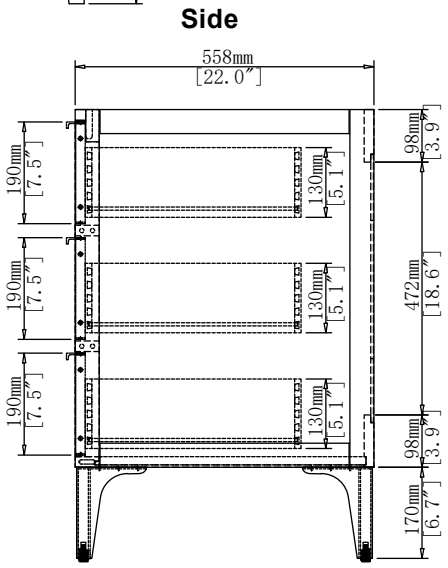

All dimensions and specifications are nominal and may vary.Use actual products for accuracy in critical situations.

OAKMET36ATQZ-DO

VANITY TOP

With rectangular undermount sink

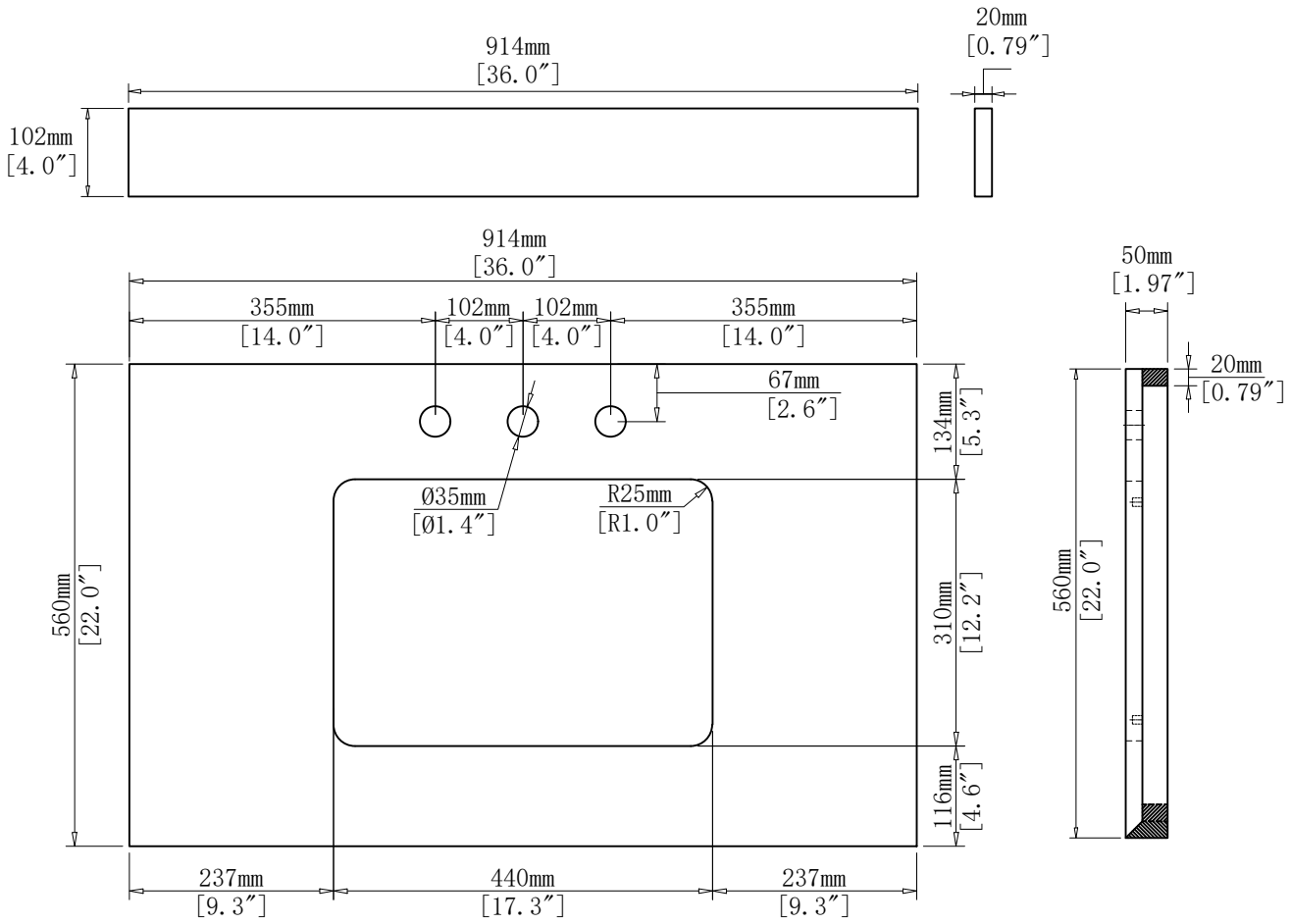

Undermount Sink

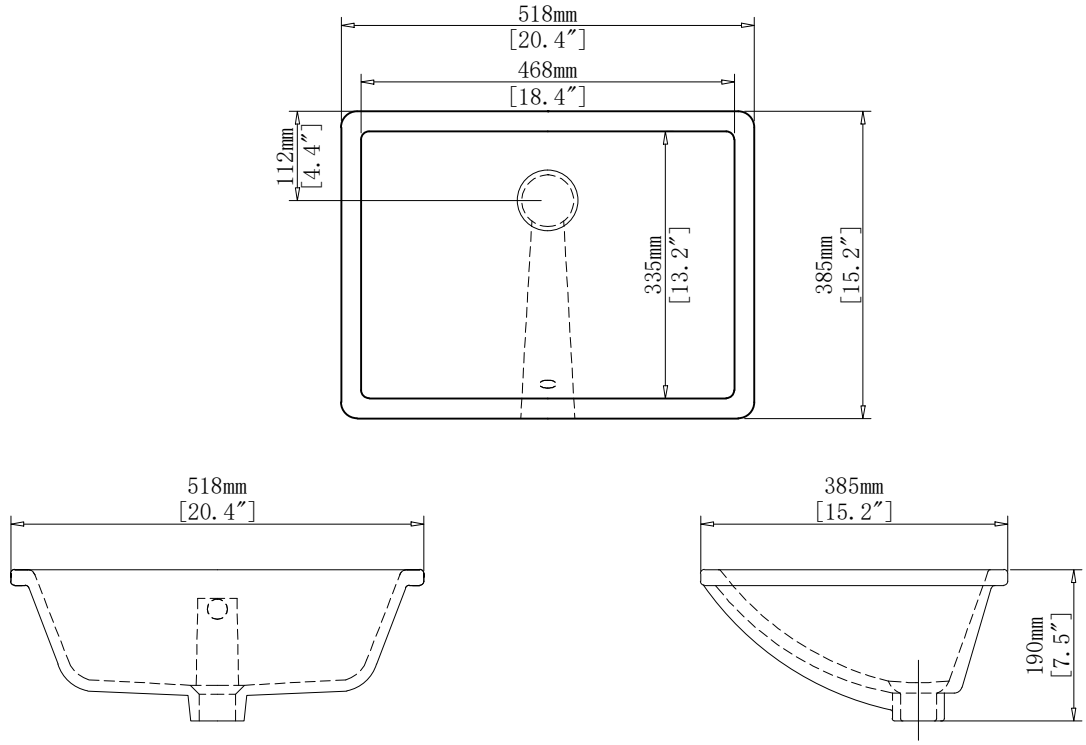

All dimensions and specifications are nominal and may vary.Use actual products for accuracy in critical situations.

Vanity Installation

SUGGESTED TOOLS AND MATERIALS:

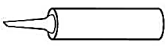
Sealant


Measuring tape


Safety glasses


Rag


Level

INSTALLATION INSTRUCTLONS

We recommend consulting a professional if you are unfamiliar with installing bathroom fixtures and plumbing .We accept no liability for any damage to the floor,plumbing,vanity cabinet,sink,counter top,or personal injury during installation.

1

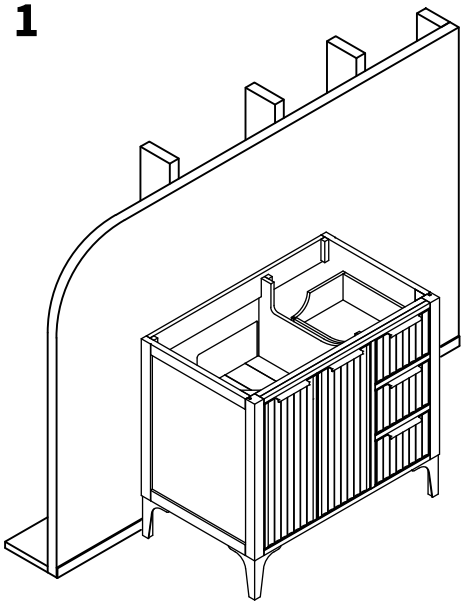

Remove vanity from box and examine vanity for any defects or damage.Carefully place vanity against wall.

2

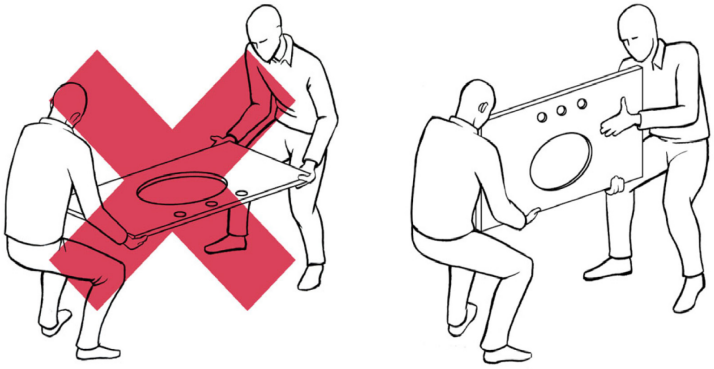

Always use a two man crew,a single person crew is much more likely to break or chip the stone top.

3

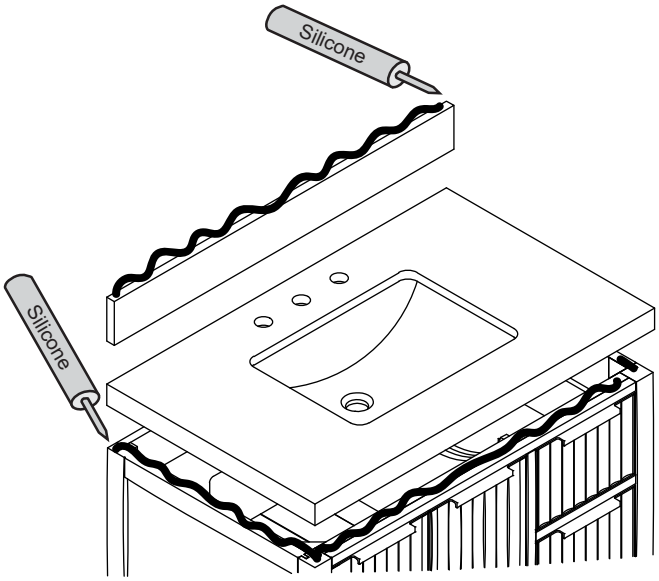

Apply bead of quality sealant evenly along the bottom of backsplash and the top of the vanity.

4

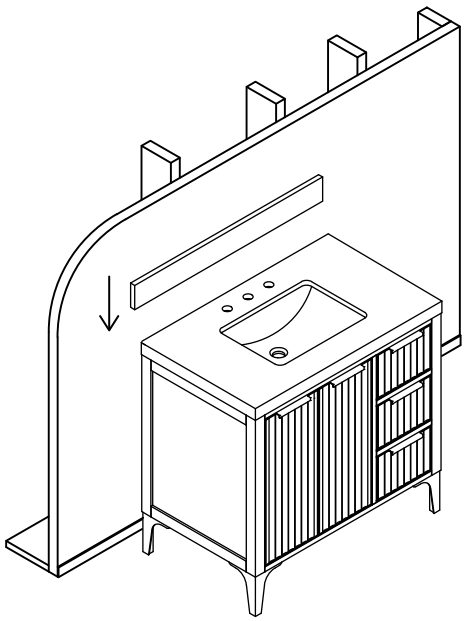

Finally,place the bottom side of back splash with sealant onto the counter top and check alignment of back splash.

Note:sink style,shape,countertop,vanity may vary from the picture above. Instructional purpose only