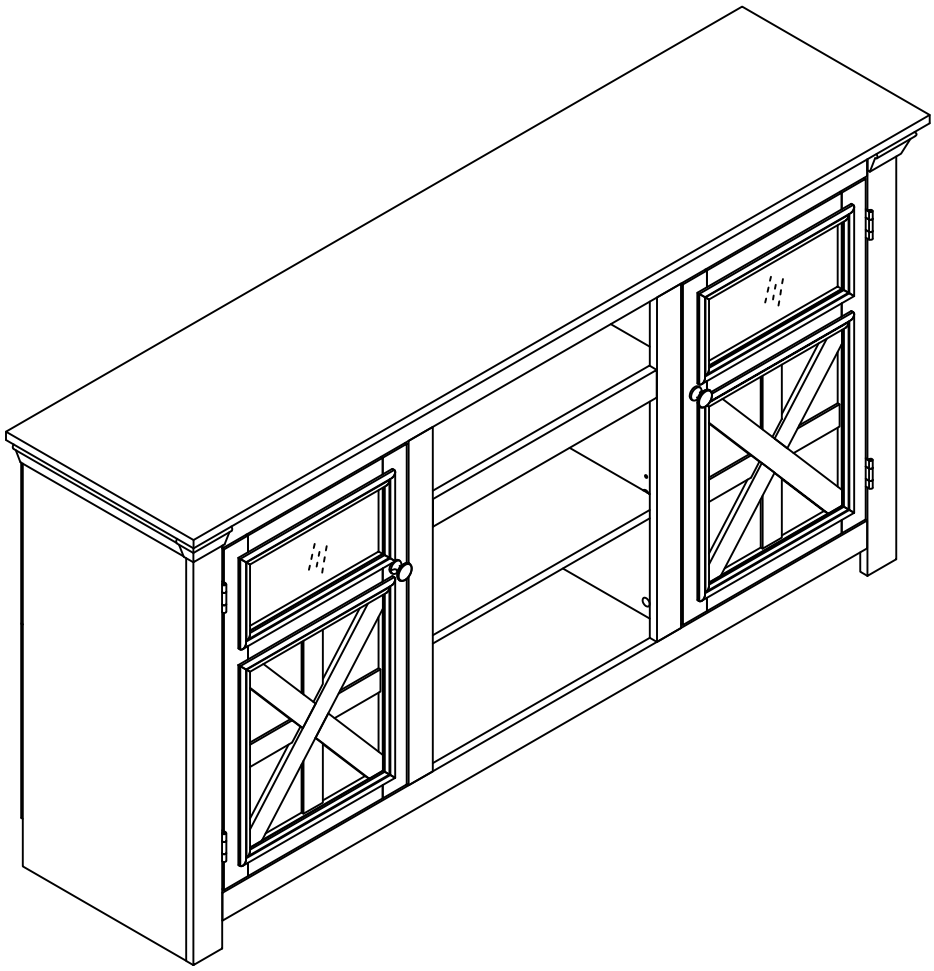

TV Stand w/ Fireplace

Assembly Instruction

NOTE: This instruction manual contains IMPORTANT safety information. Please read carefully before assembling the product

List of Parts

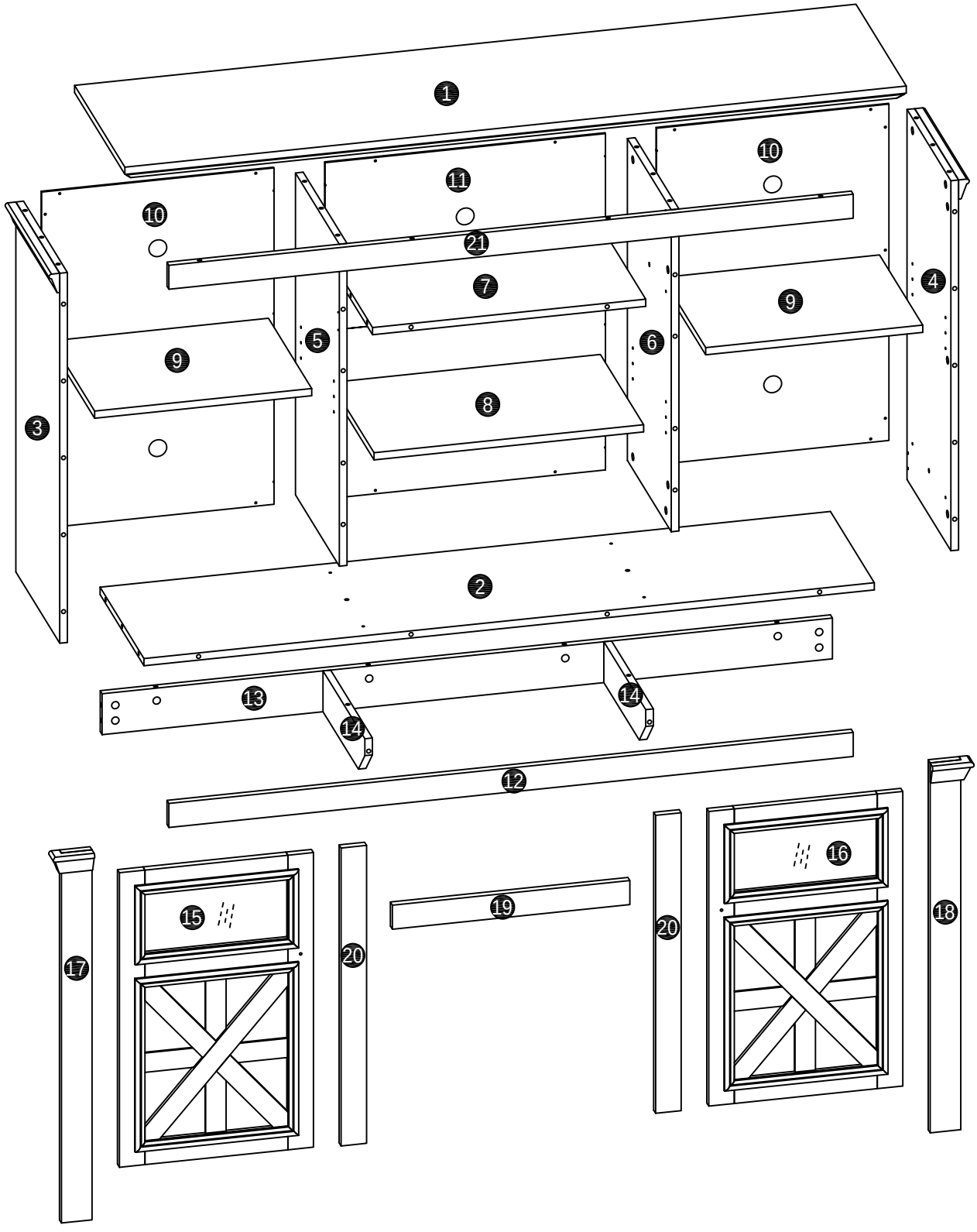

Hardware

A x 58+2	B x 58+2	C x 18+1	D x 8+1	E x 4
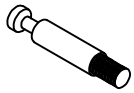 Ø6 x 34mm	 Ø15 x 10mm	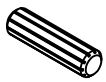 Ø8*30mm	 Ø3*12mm	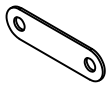

F x 2	G x 2	H x 4+1	I x 2	J x 28+2
	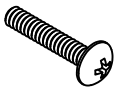 Ø4*22mm	 Ø3*16mm	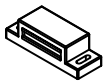	 Ø3.5*12mm

K x 12	L x 16+1	M x 4	N x 2
	 Ø3.5*12mm	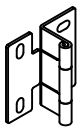	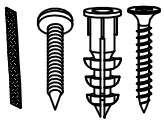

STEP1

A x 4
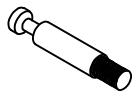
Ø6 x 34mm
B x 4

Ø15 x 10mm

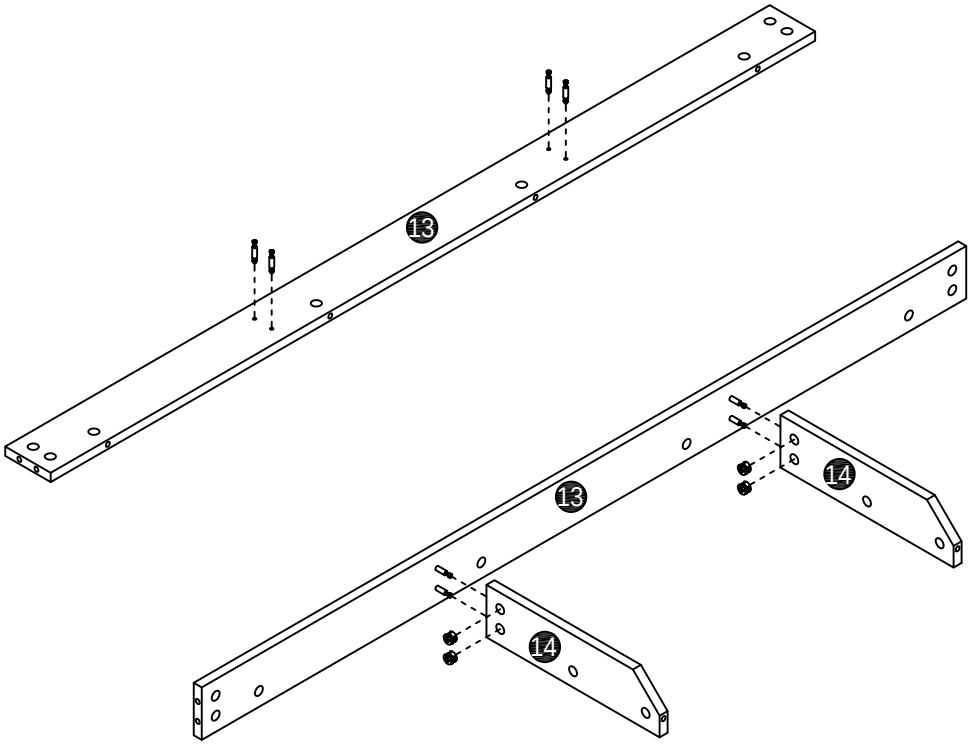

STEP2

A x 10
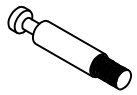
Ø6 x 34mm

STEP3

B x 6

Ø15 x 10mm

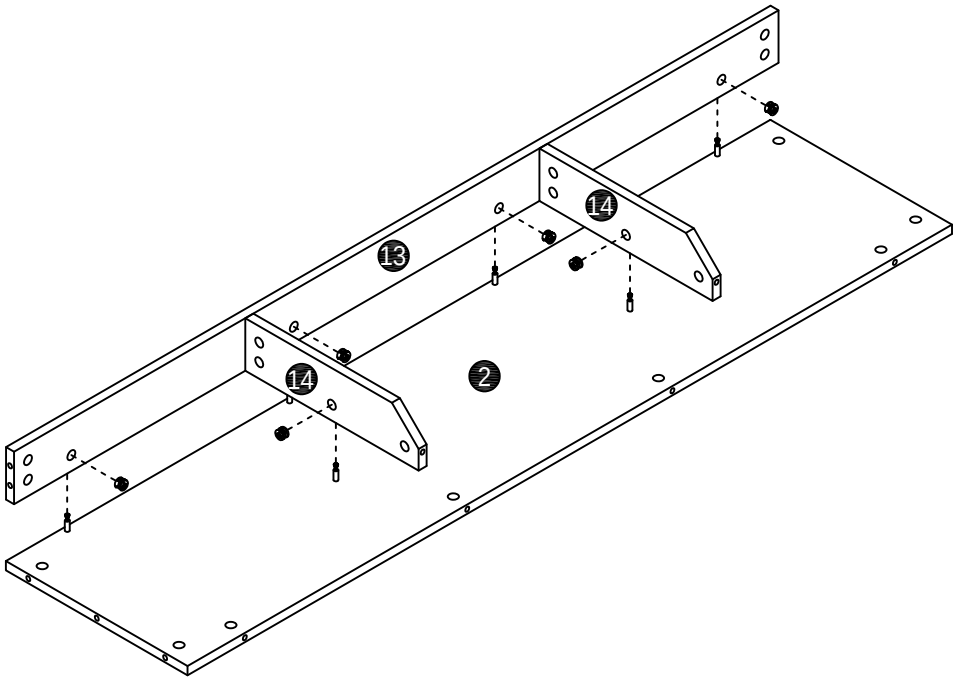

STEP4

A x 6
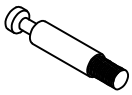
Ø6 x 34mm
B x 6

Ø15 x 10mm

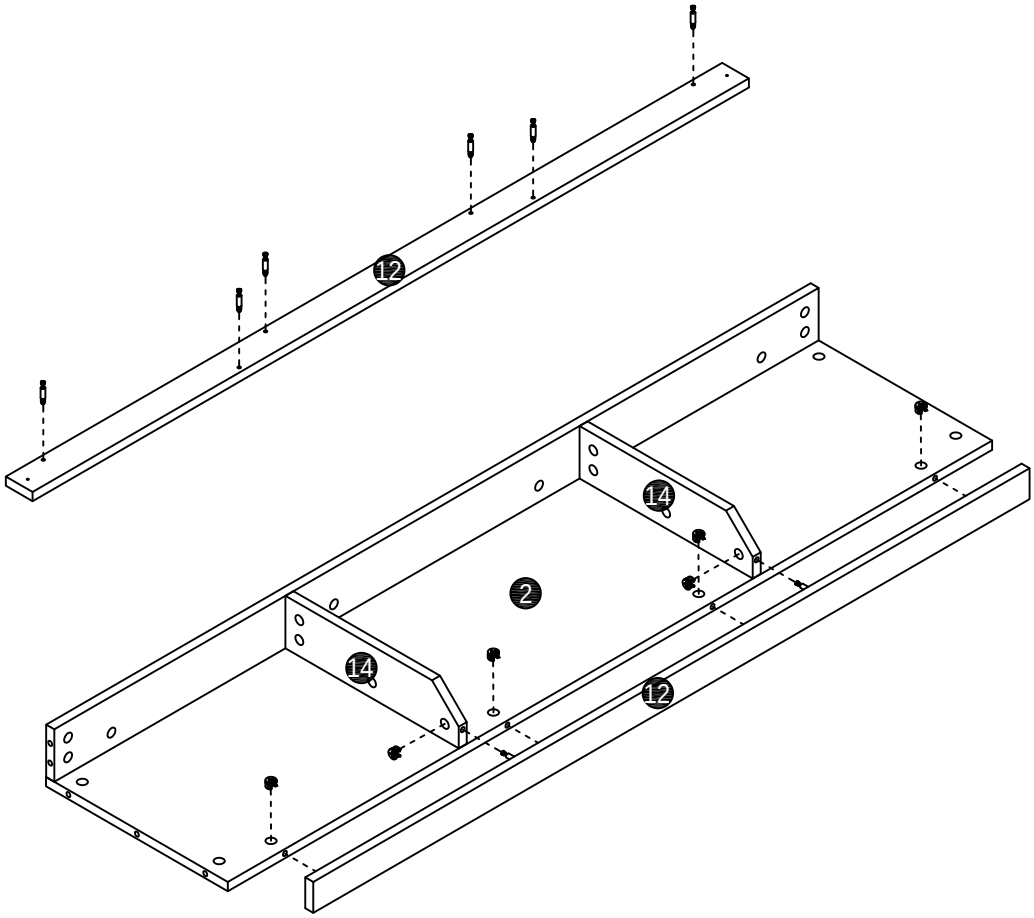

STEP5

A x 2
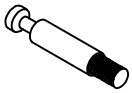
Ø6 x 34mm
B x 2

Ø15 x 10mm

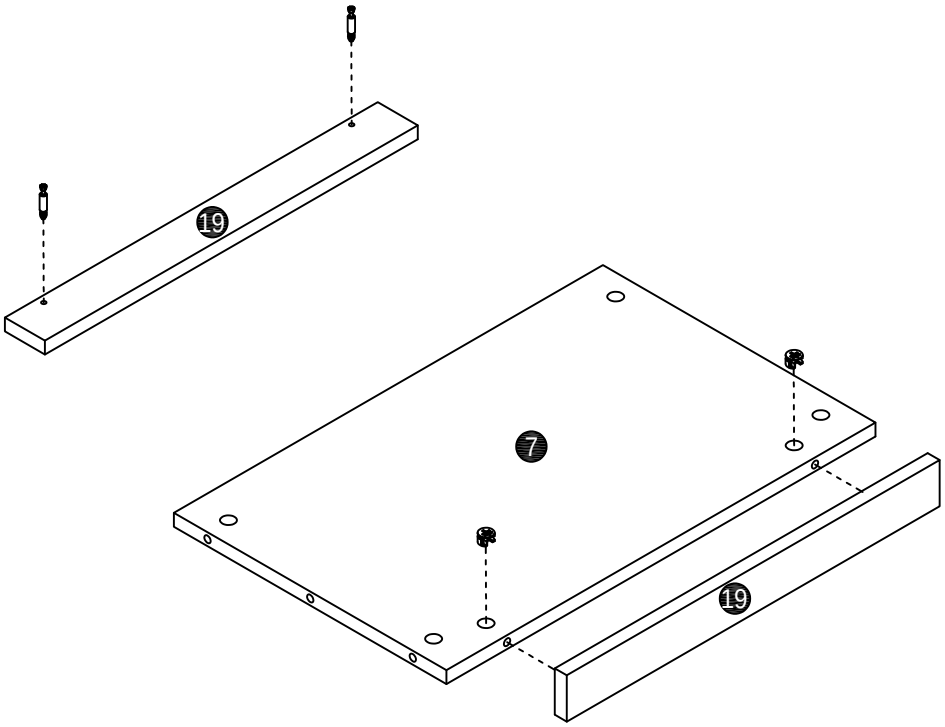

STEP6

H x 4

Ø3*16mm
I x 2
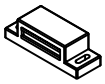

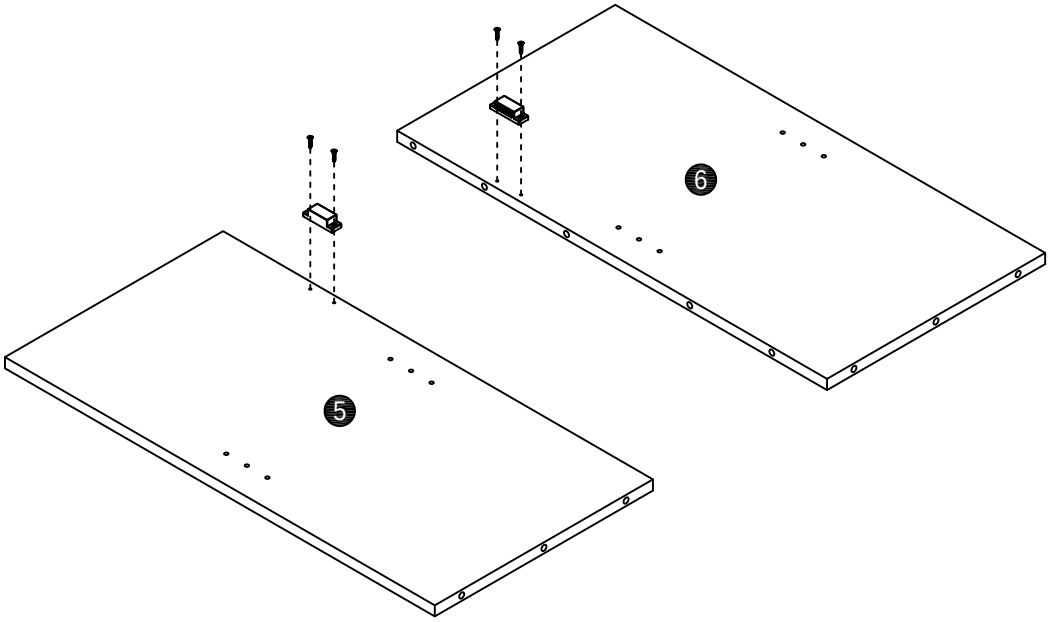

STEP7

A x 4
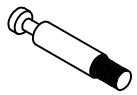
Ø6 x 34mm

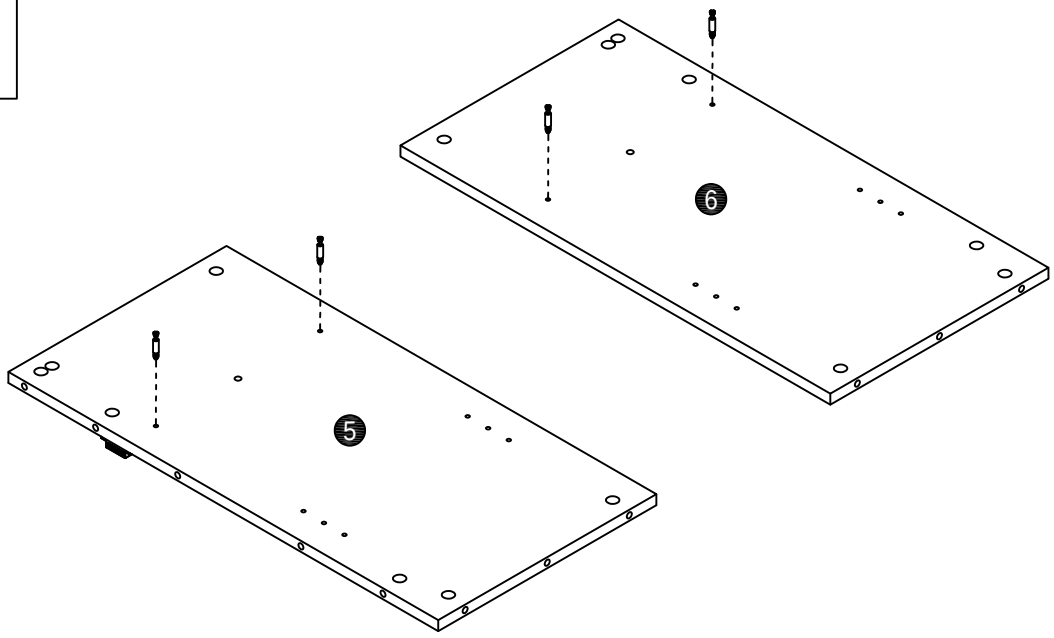

STEP8

A x 4
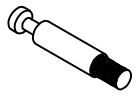
Ø6 x 34mm

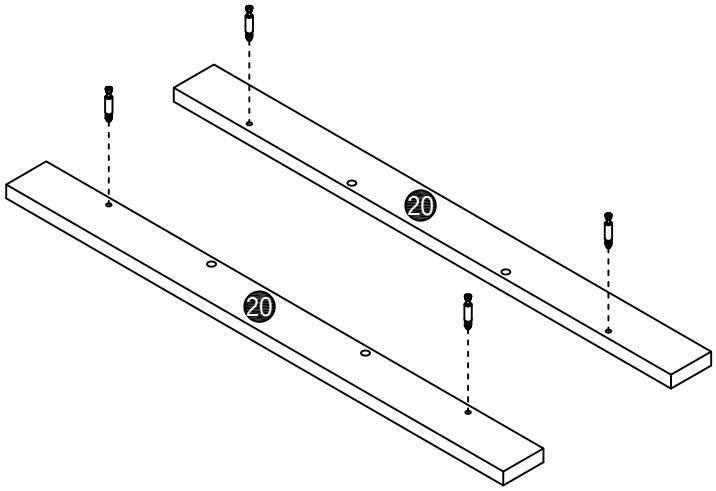

STEP9

B x 4

Ø15 x 10mm
C x 4
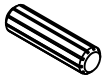
Ø8*30mm

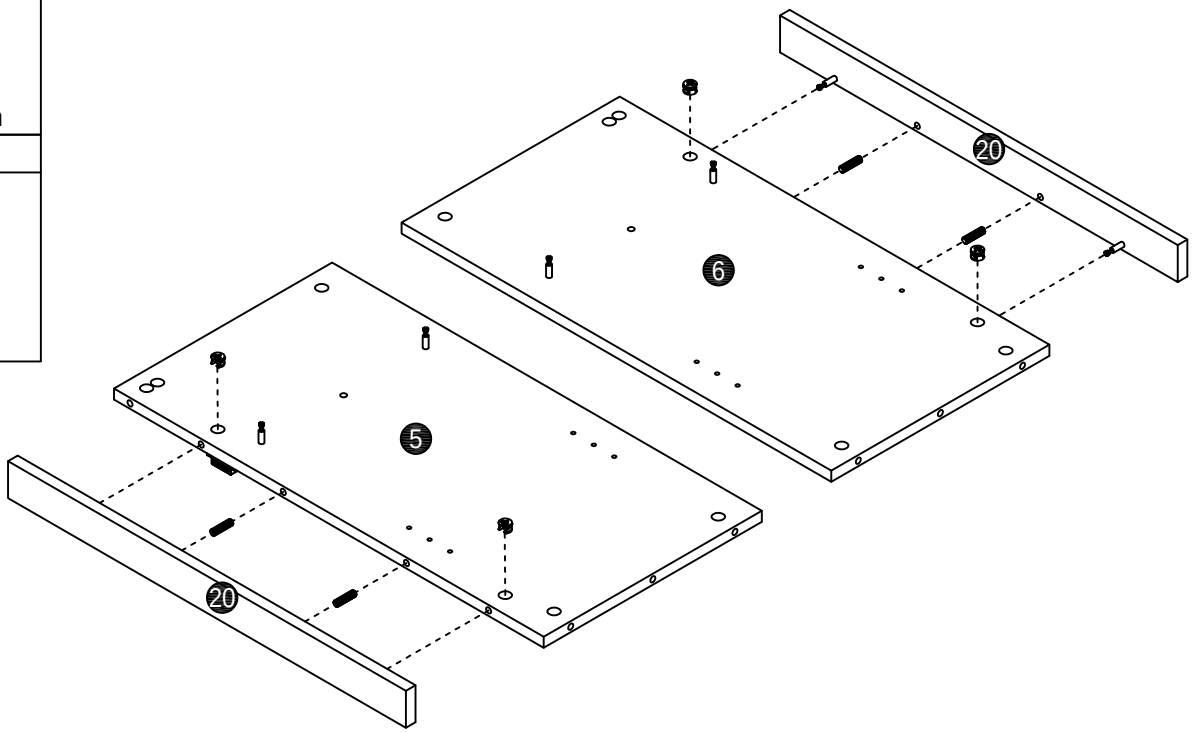

STEP10

B x 4

Ø15 x 10mm
C x 2
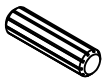
Ø8*30mm

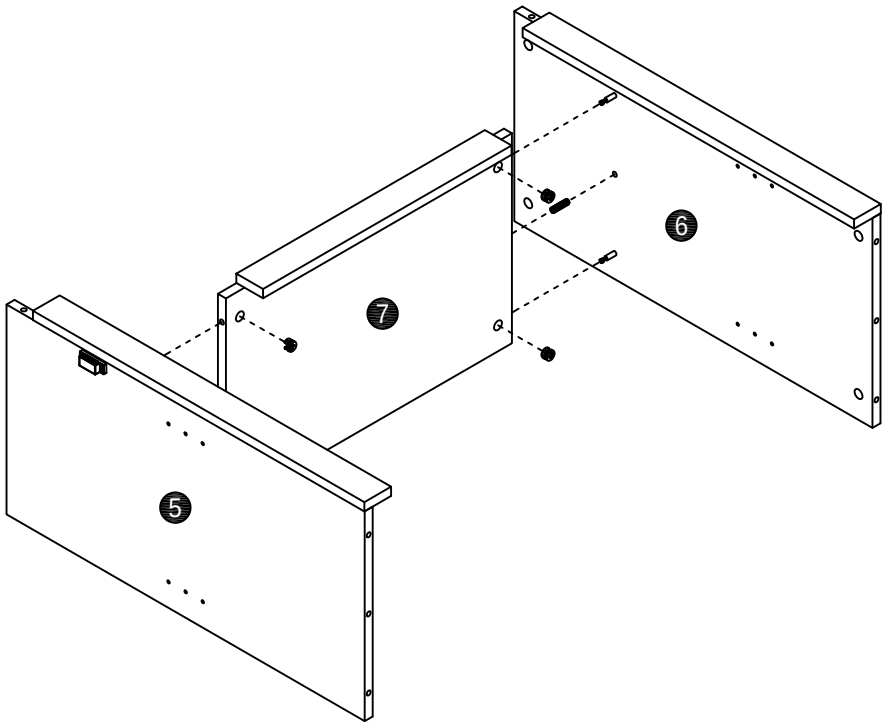

STEP11

B x 4

Ø15 x 10mm
C x 2
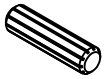
Ø8*30mm

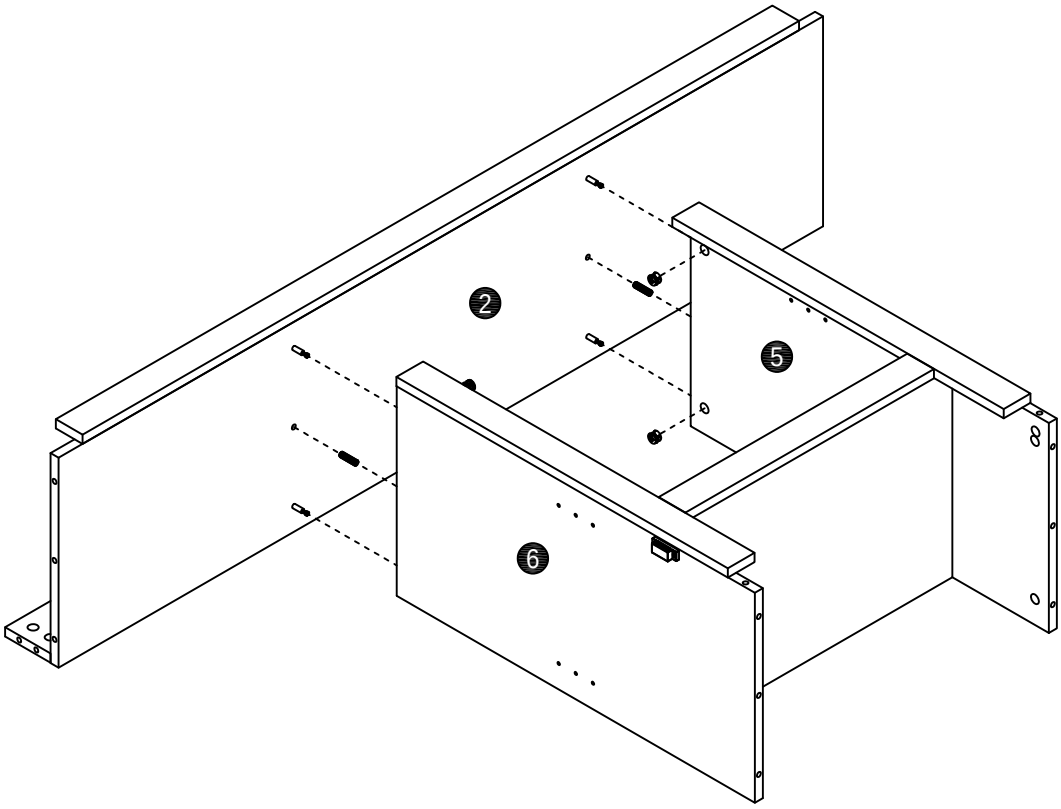

STEP12

A x 6
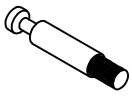
Ø6 x 34mm
L x 8

Ø3.5*12mm
M x 4
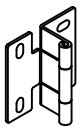

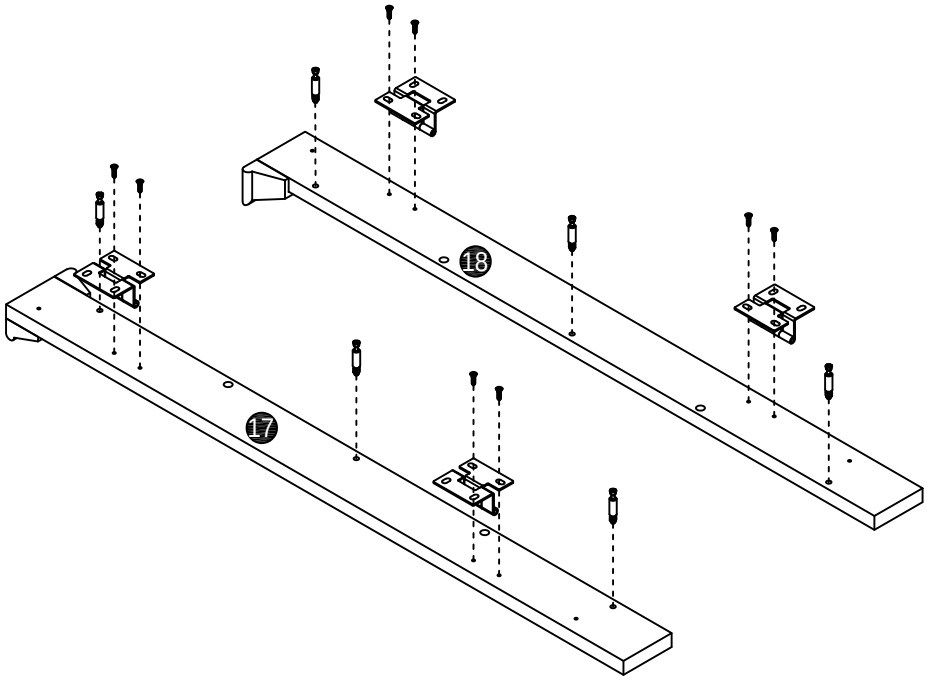

STEP13

A x 8
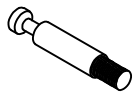
Ø6 x 34mm

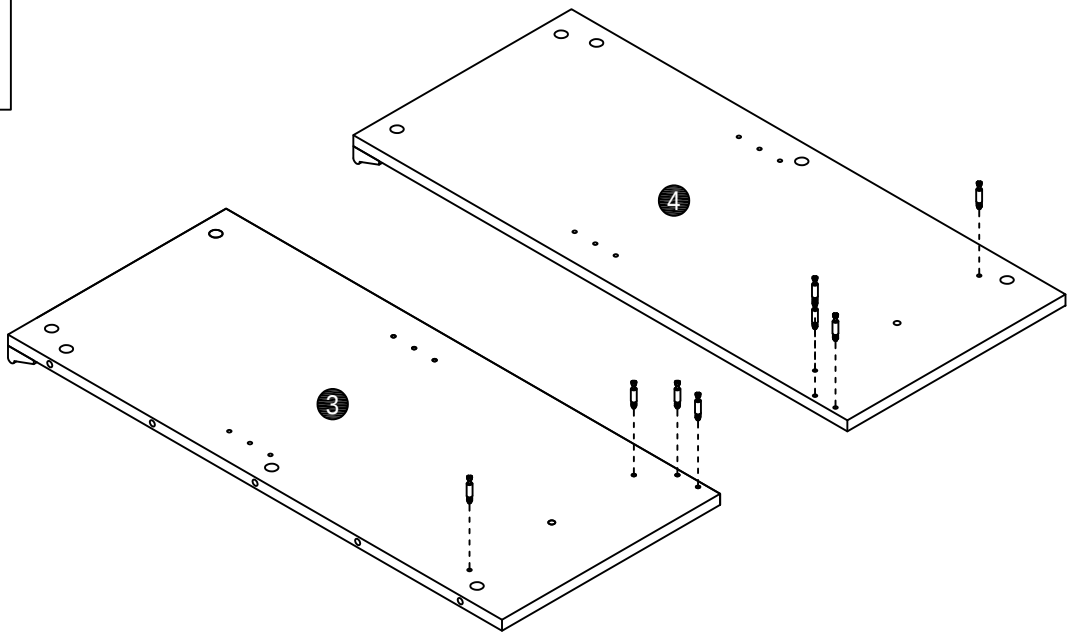

STEP14

B x 6

Ø15 x 10mm
C x 4
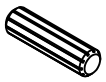
Ø8*30mm

STEP15

B x 8

Ø15 x 10mm
C x 2
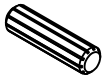
Ø8*30mm

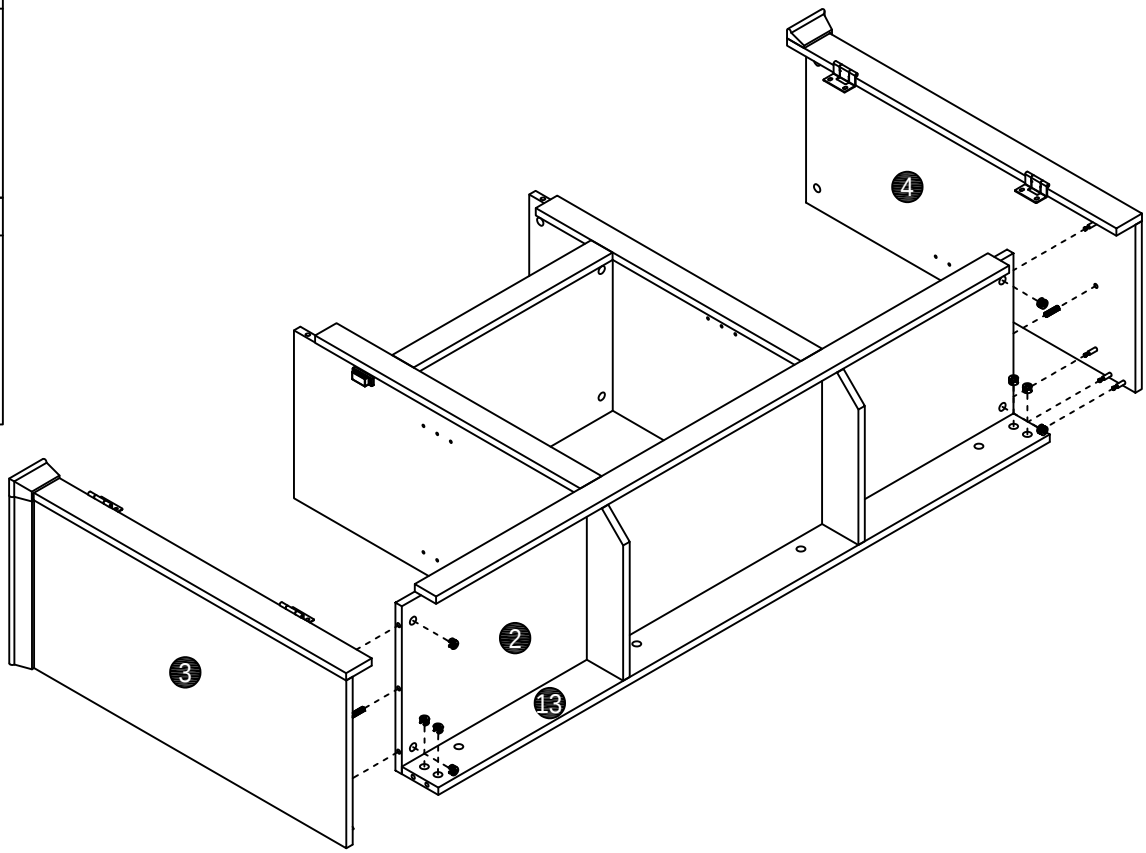

STEP16

A x 14
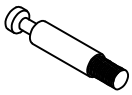
Ø6 x 34mm

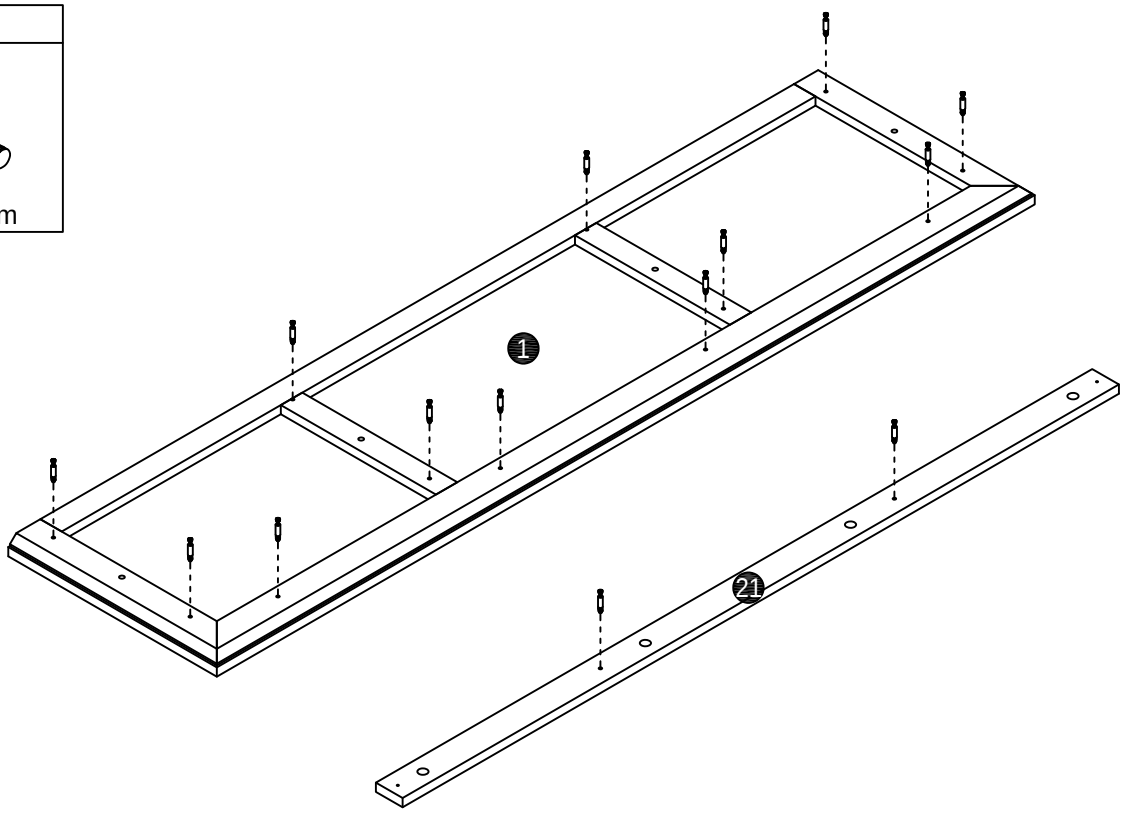

STEP17

B x 2

Ø15 x 10mm
D x 8

Ø3*12mm
E x 4
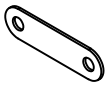

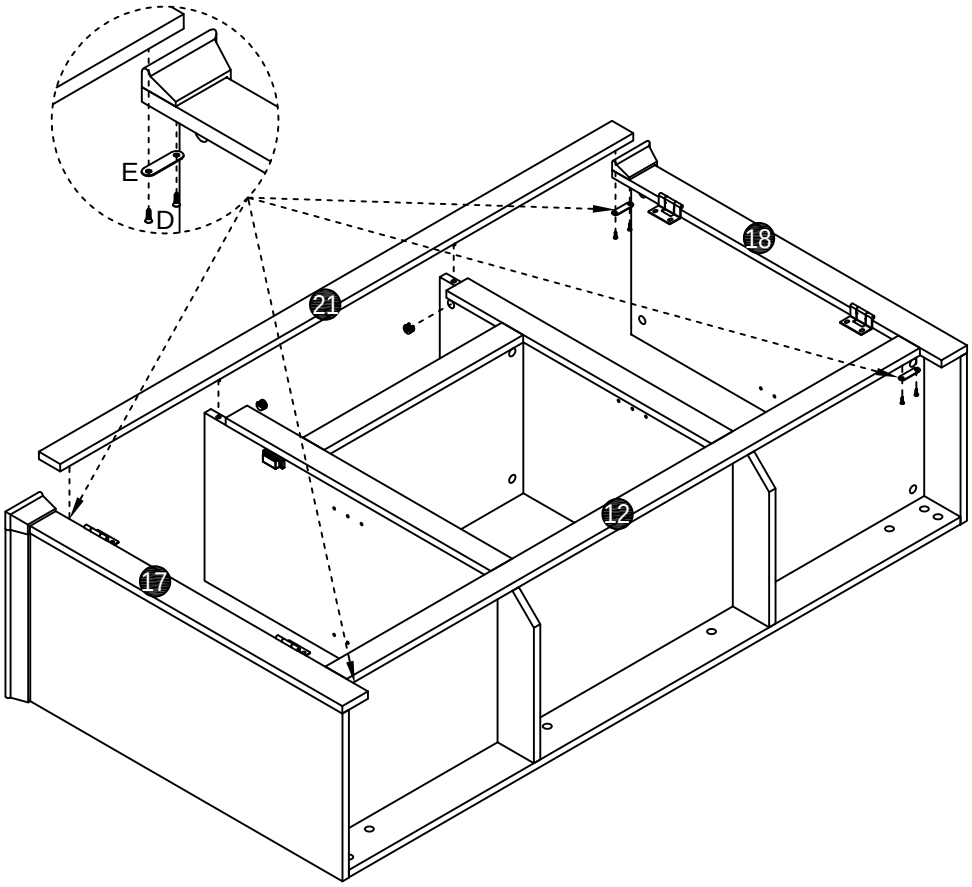

STEP18

B x 12

Ø15 x 10mm
C x 4
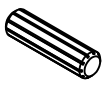
Ø8*30mm

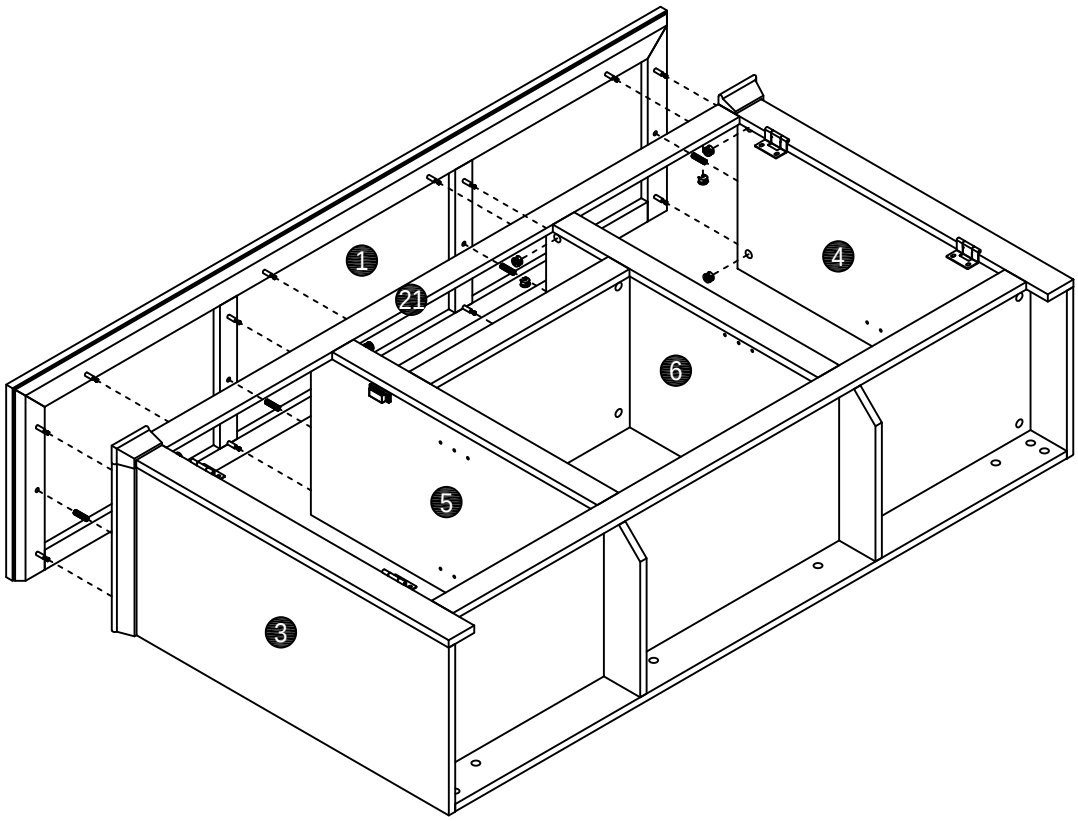

STEP19

F x 2
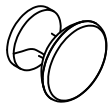
G x 2
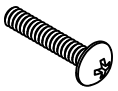 Ø4*22mm
D x 4
 Ø3*12mm
E x 2
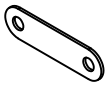

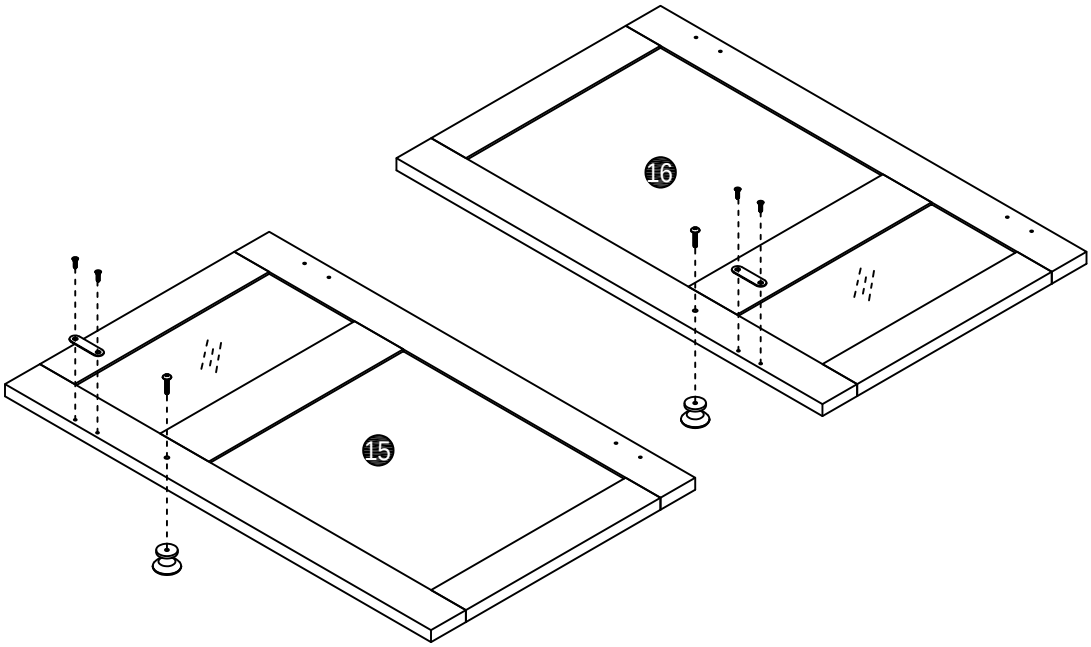

STEP20

L x 8
 Ø3.5*12mm

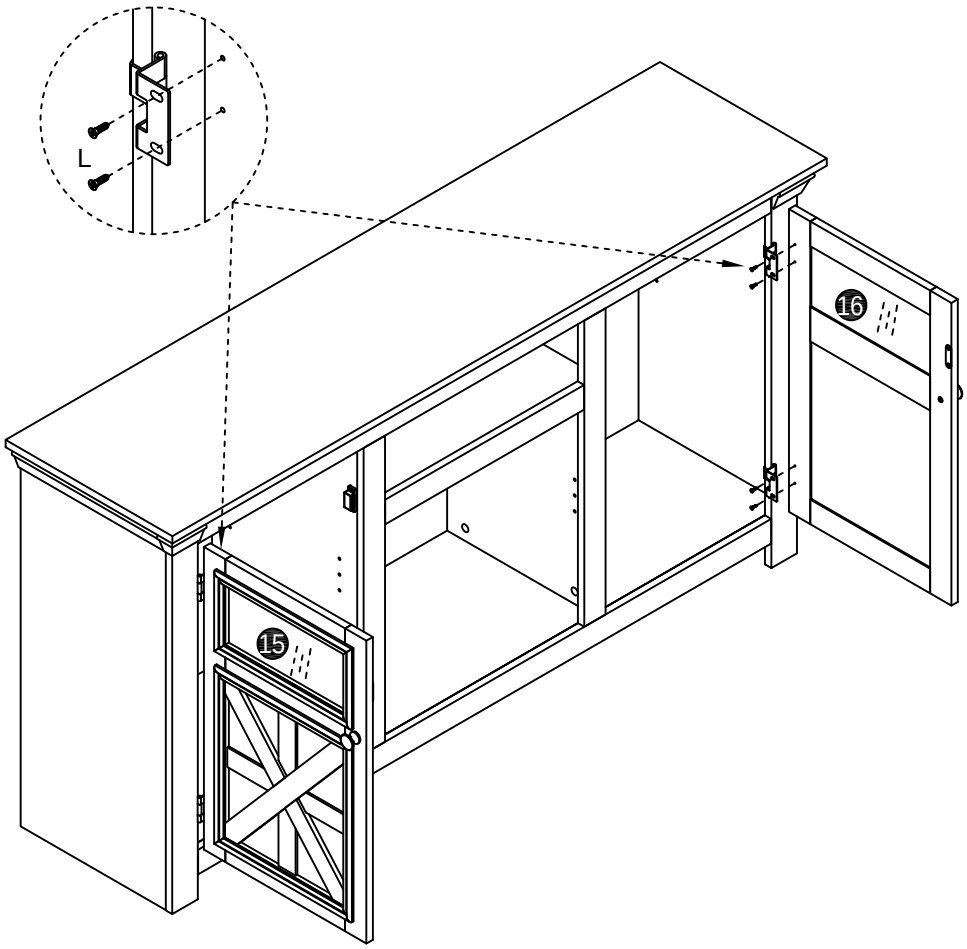

STEP21

K x 12



TV STAND ASSEMBLY

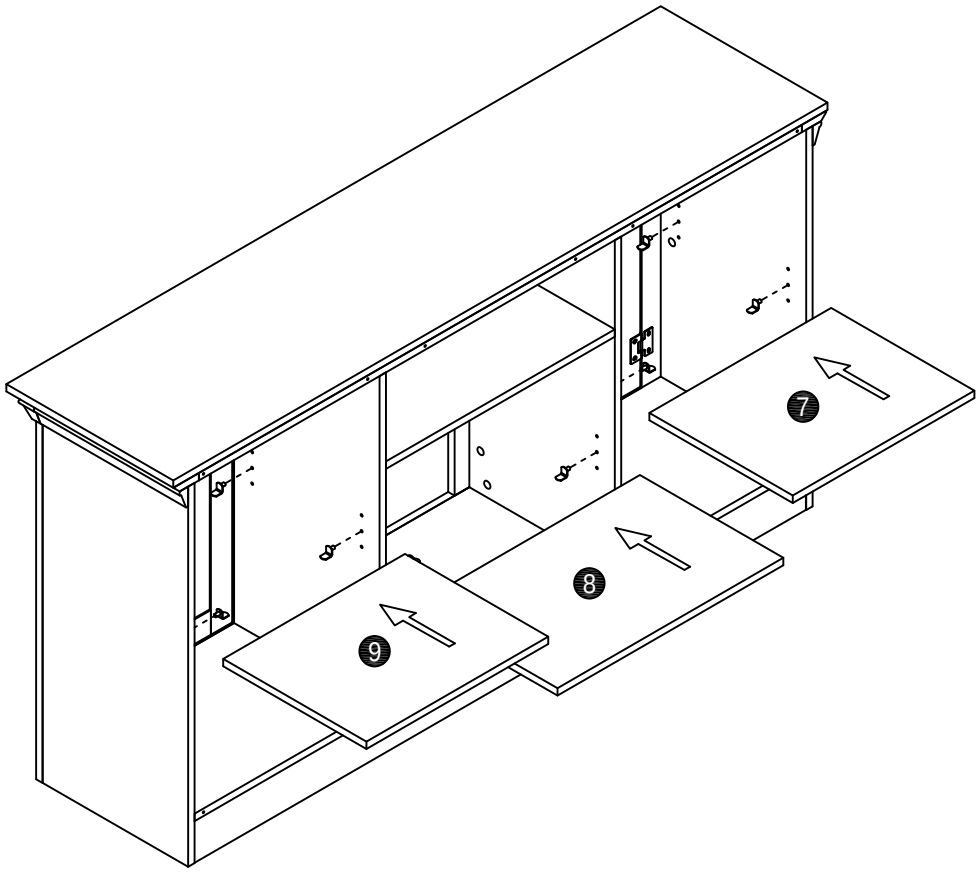

STEP22

J x 28



Ø3.5*12mm

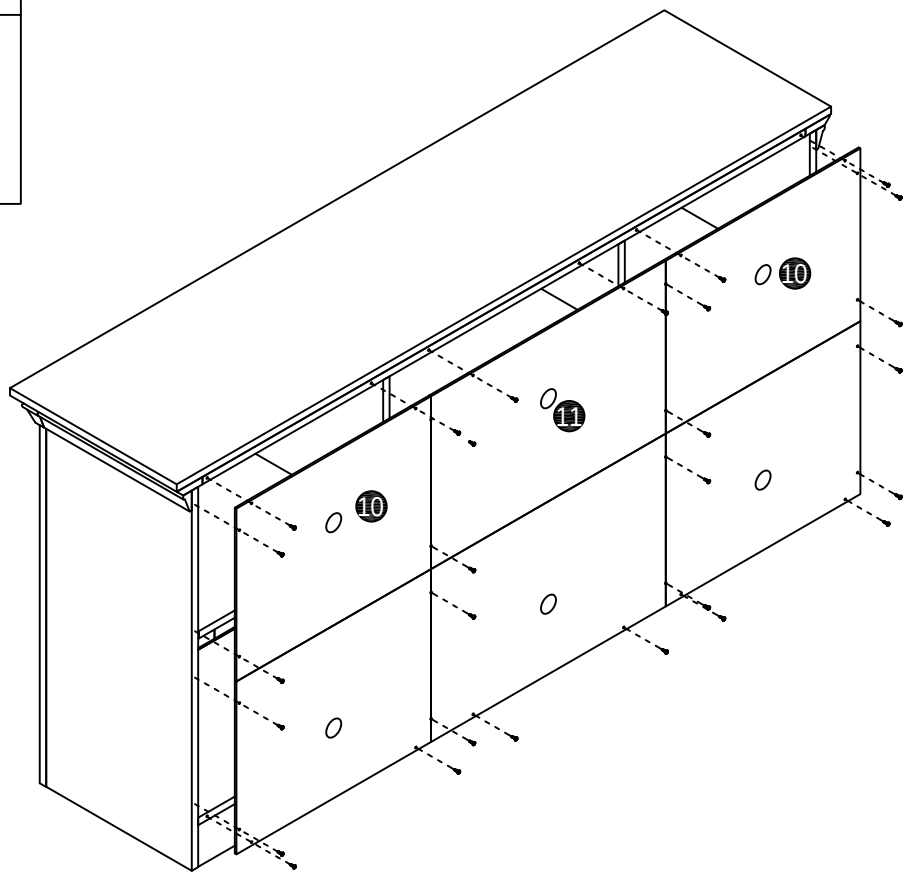

STEP23

N x 2

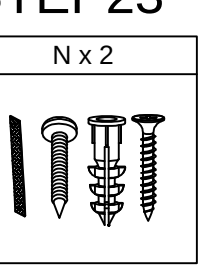

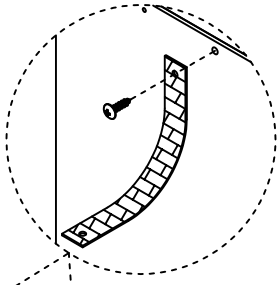

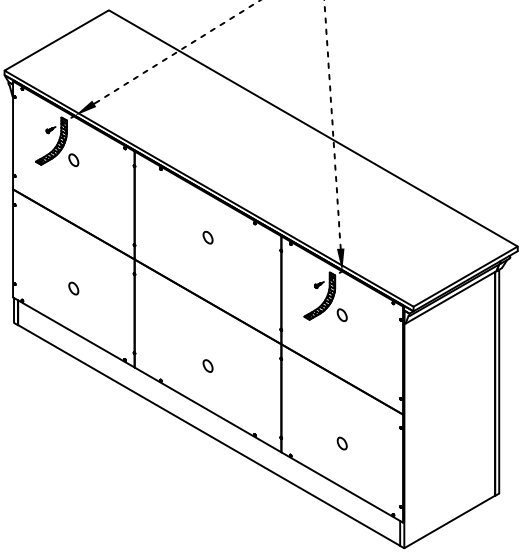

Wall

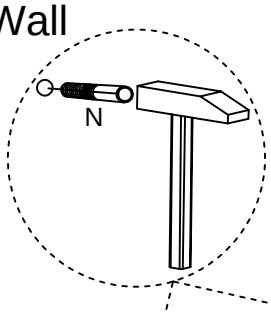

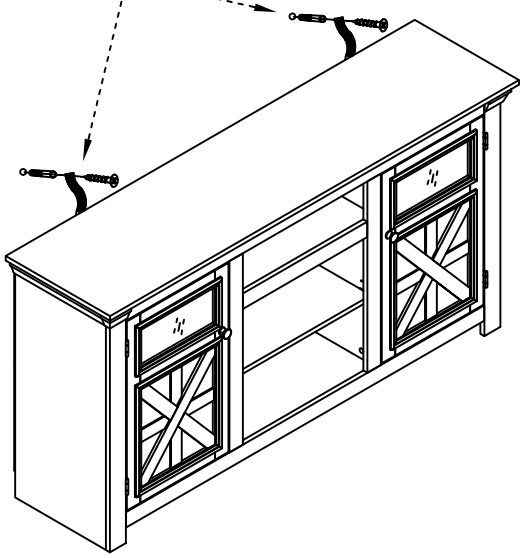

STEP24

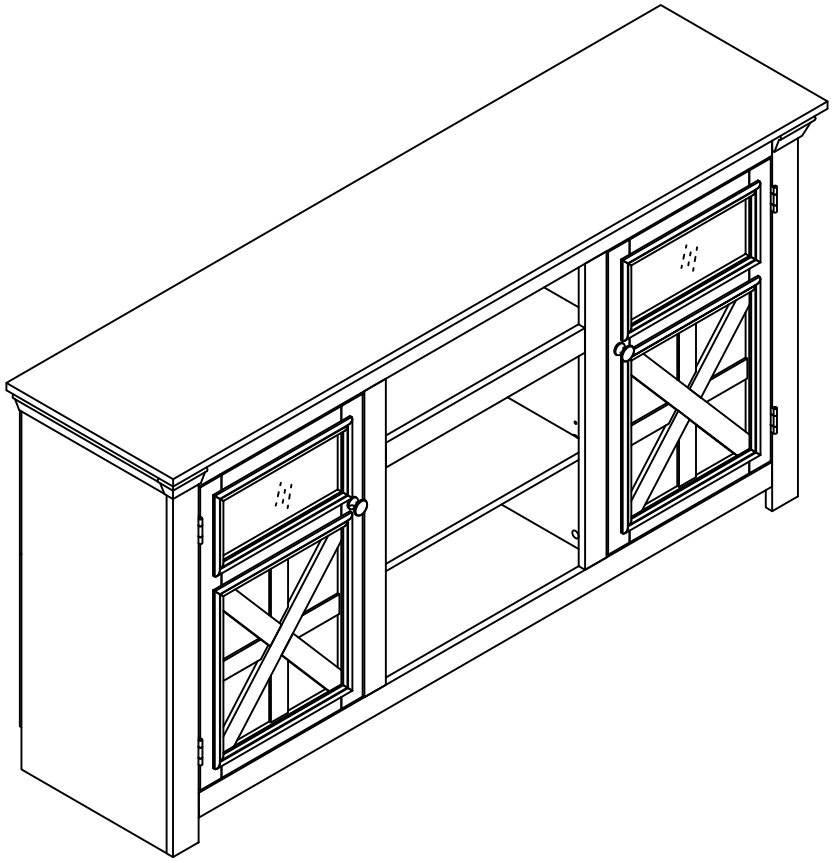

STEP25

K x 8



FIREPLACE MANTEL ASSEMBLY

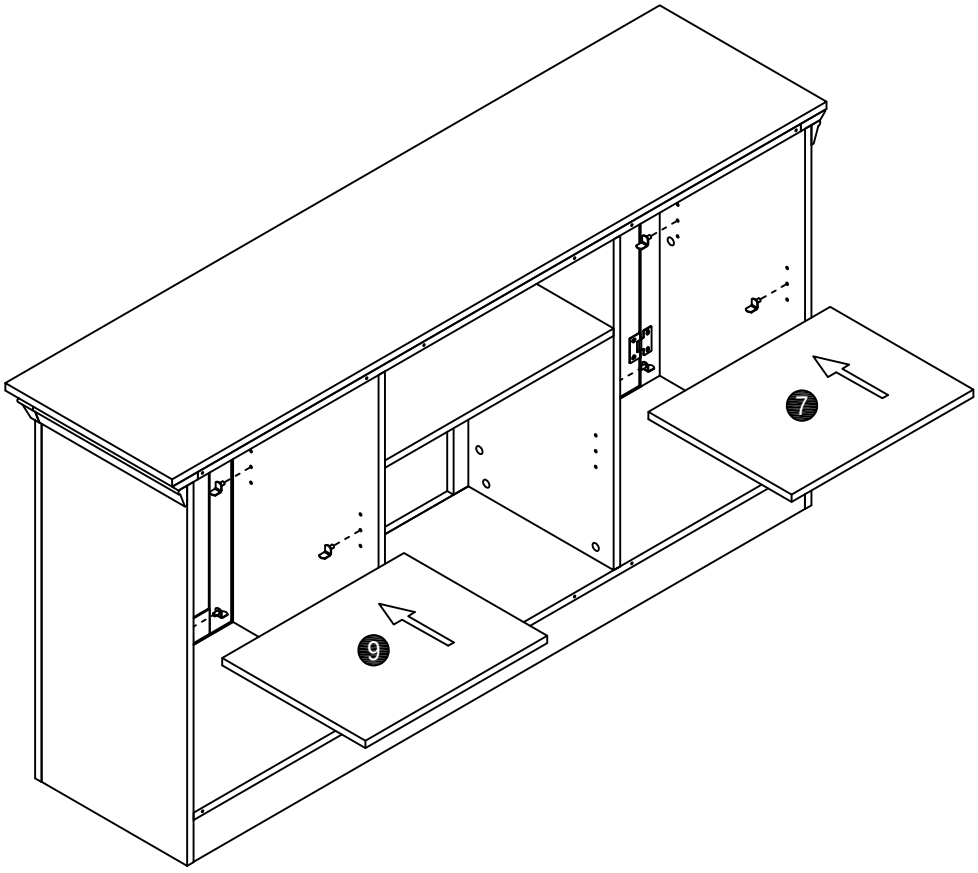

STEP26

J x 16



Ø3.5*12mm

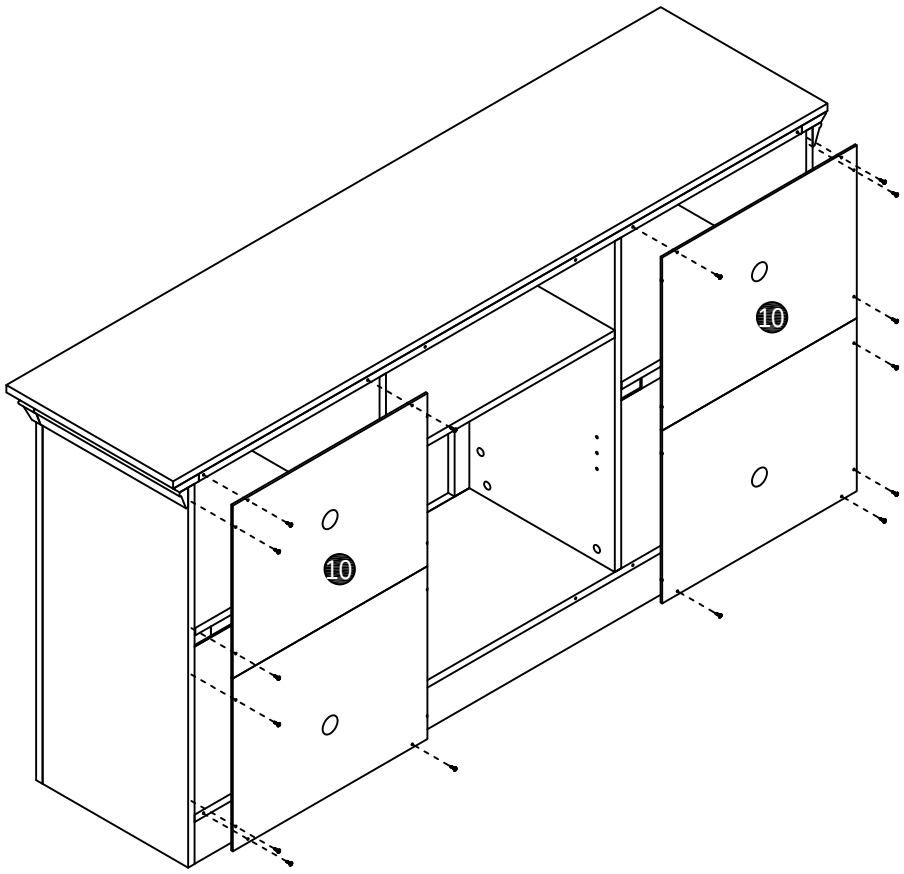

STEP27

N x 2



Wall

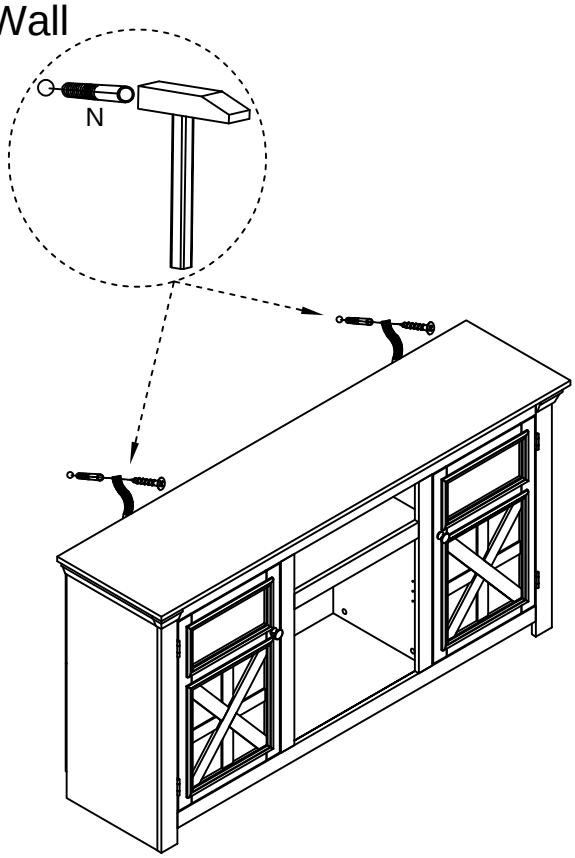

STEP28

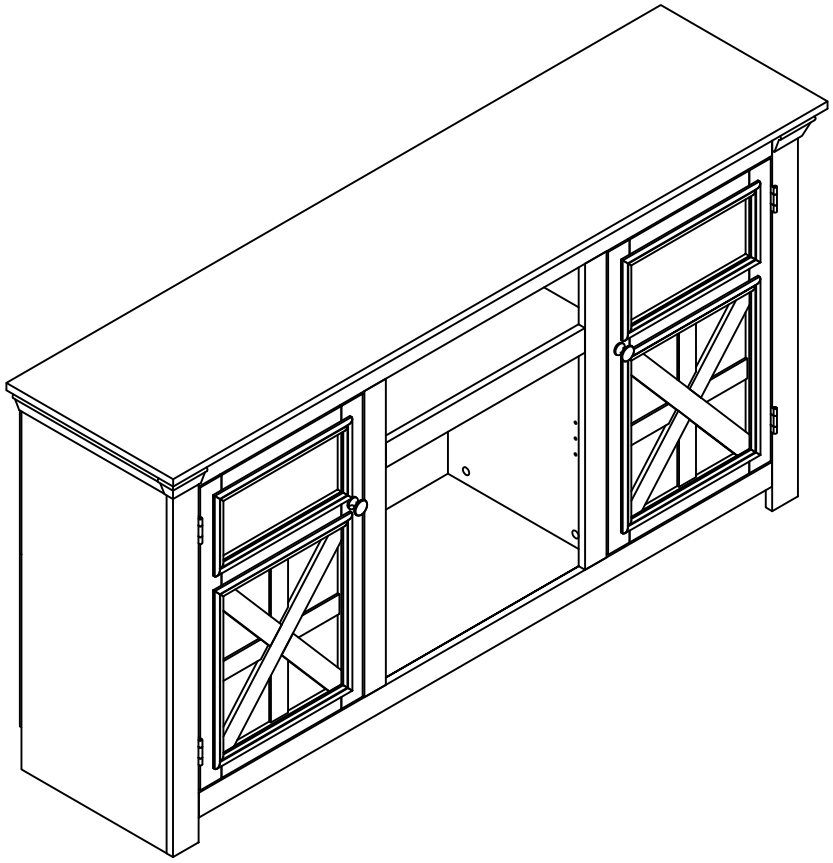

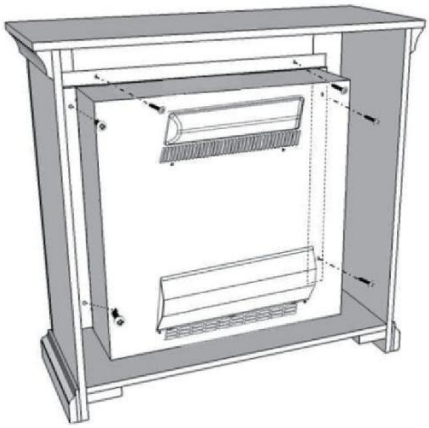

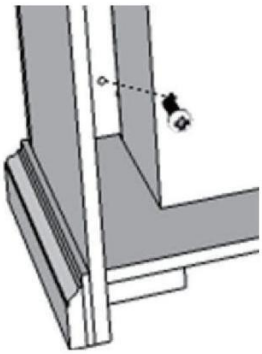

FIREPLACE INSTALLATION

If you decide to install the fireplace into the mantel, carefully set the unit from the back of the mantel and center it in the opening.
Check the alignment and attach the unit to the mantel by inserting screws through the drilled holes on the trim to the mantel.
NOTE: Do not attempt to install the unit from the front of the mantel. It will not fit.