ASSEMBLY INSTRUCTION

SKU CODE: (W00537)

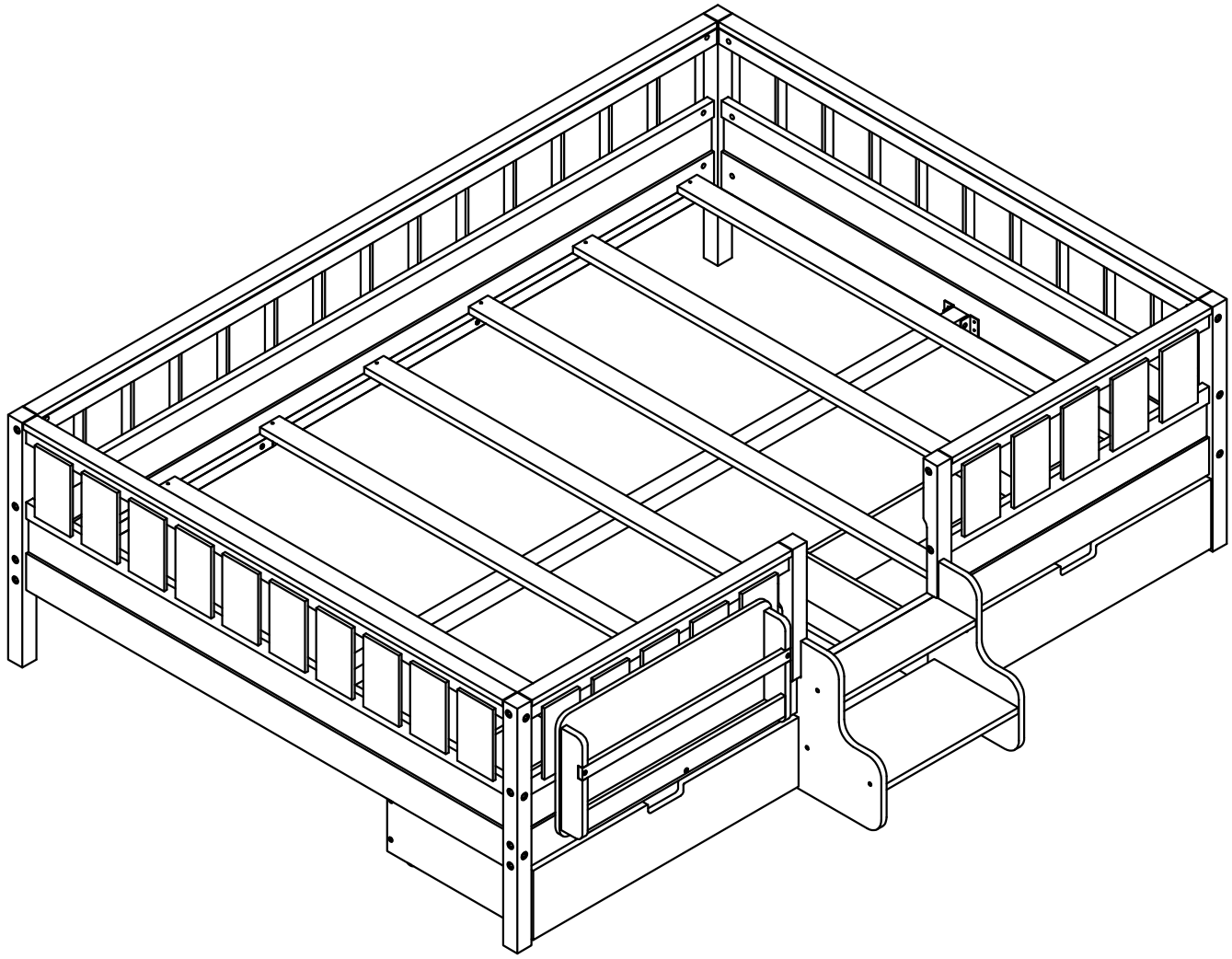

Bed type	Length	Width	Thickness
Full Standard	74"- 75"	53 1/ 2"	6" max

This set is included 1 boxes if don't receive full 1 boxes please contact our customer service team.

01/19

ASSEMBLY INSTRUCTION

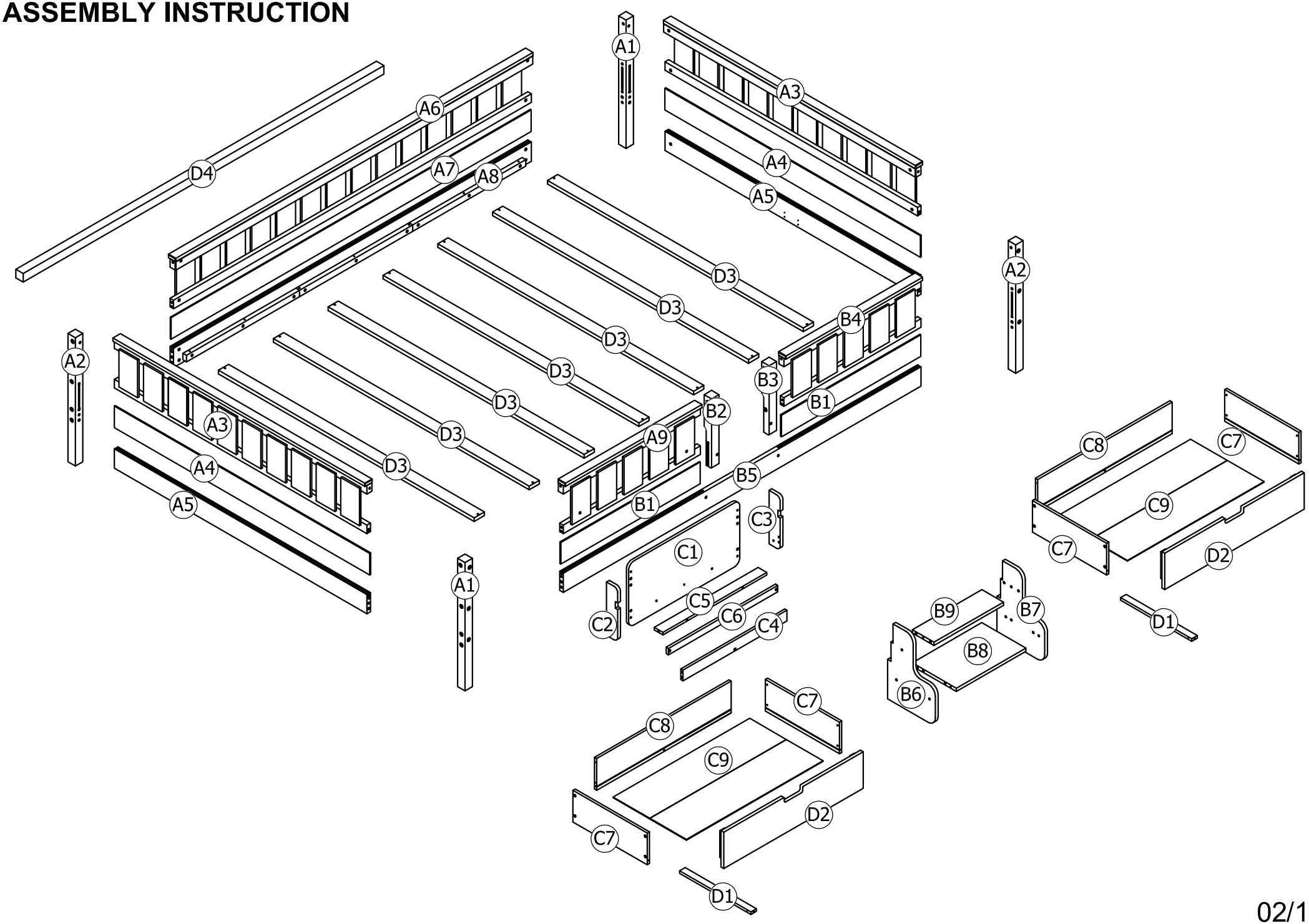

02/19

Part List & Hardware List (Box 1 - W00537 - 1)

A1  Leg-2pcs	A2  Leg-2pcs	A5 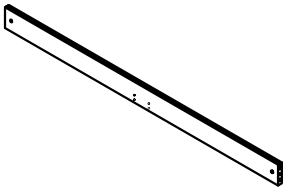 WoodBar-2pcs
B2  WoodBar-1pc	B3 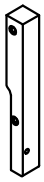 WoodBar-1pc	B6 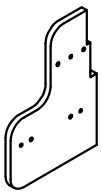 Panel-1pc
B7 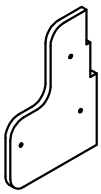 Panel-1pc	B8 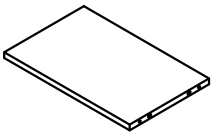 Panel-1pc	B9 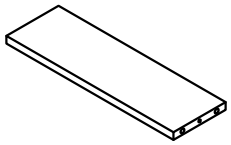 Panel-1pc
C1 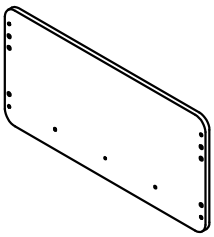 Panel-1pc	C2 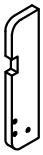 WoodBar-1pc	C3 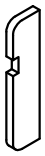 WoodBar-1pc
C4 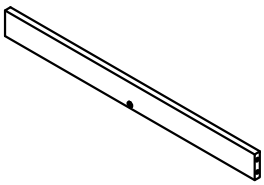 WoodBar-1pc	C5 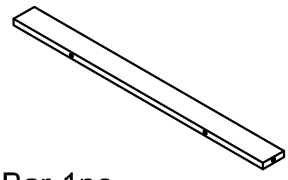 WoodBar-1pc	C6 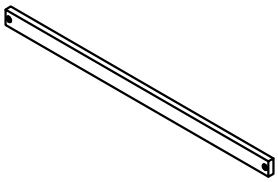 WoodBar-1pc
C7 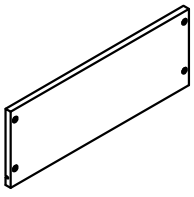 Panel-4pcs	C8 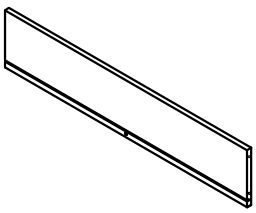 Panel-2pcs	C9 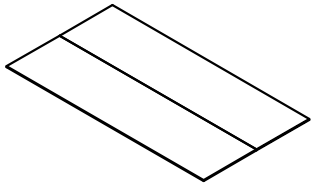 Panel-2pcs
D1 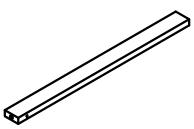 WoodBar-2pcs	D2 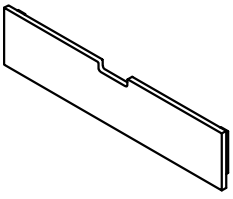 Panel-2pcs	D3 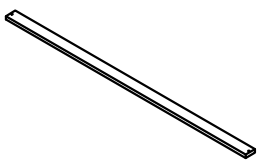 Slats-7pcs

03/19

Part List (Box 2 - W00537 - 2)

A3

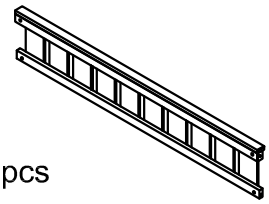

WoodBar-2pcs

A4

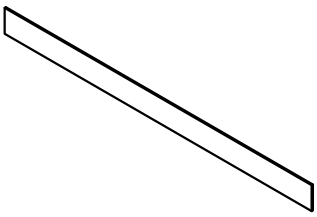

Panel-2pcs

A6

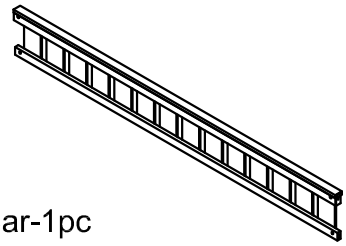

WoodBar-1pc

A7

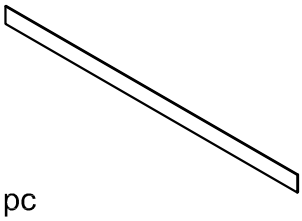

Panel-1pc

A8

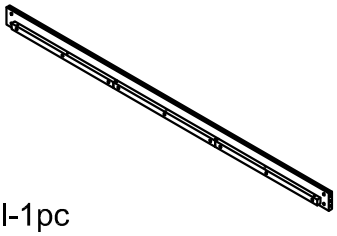

Side Rail-1pc

A9

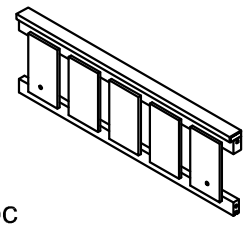

WoodBar-1pc

B1

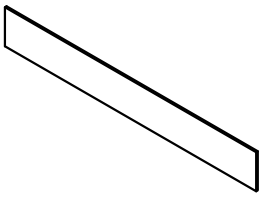

Panel-2pcs

B4

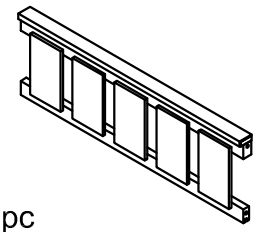

WoodBar-1pc

B5

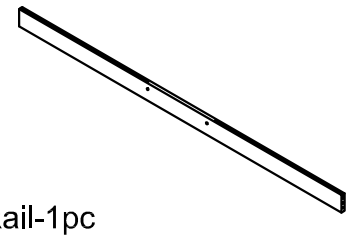

Side Rail-1pc

D4

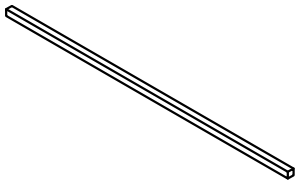

WoodBar-1pc

04/19

Hardware List (Box 1 - W00537 - 1)

1  Bolts Ø1/4" x 25 mm - 4pcs	2  Bolts Ø1/4" x 80 mm -32pcs	3  Ø1/4" x 13 mm Horizontal-Hole bolts -32 pcs
4  Bolts Ø1/4" x 35 mm - 2pcs	5 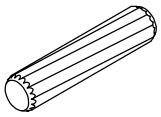 Wood dowel Ø10 x 40 mm -12pcs	6 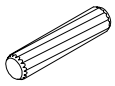 Wood dowel Ø8 x 30 mm - 10pcs
7  Wood dowel Ø6 x 30 mm - 16pcs	8 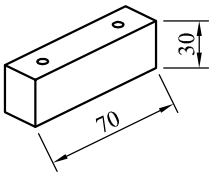 WoodBar-4pcs	9 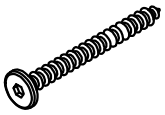 Screws 1/4" x60mm- 2pcs
10 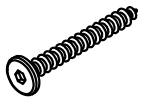 Screws 1/4" x40mm- 8pcs	11 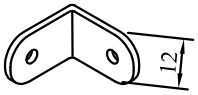 Steel Bracket - 10pcs	12 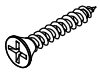 Wood Screws M3.5 x 15mm-52pcs
13  Wood Screws M4 x 30mm- 44pcs	14 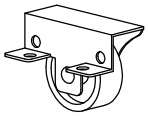 Wheels -8pcs	15 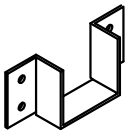 Steel Bracket - 2pcs
16  Wood Screws M4 x 20mm- 8pcs	17 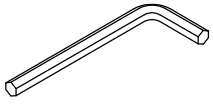 Allen Key - 1pc	

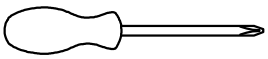

Assembly Tools Required (Not Included)

05/19

STEP 1:

X2

15	16
2(pc)	8(pcs)

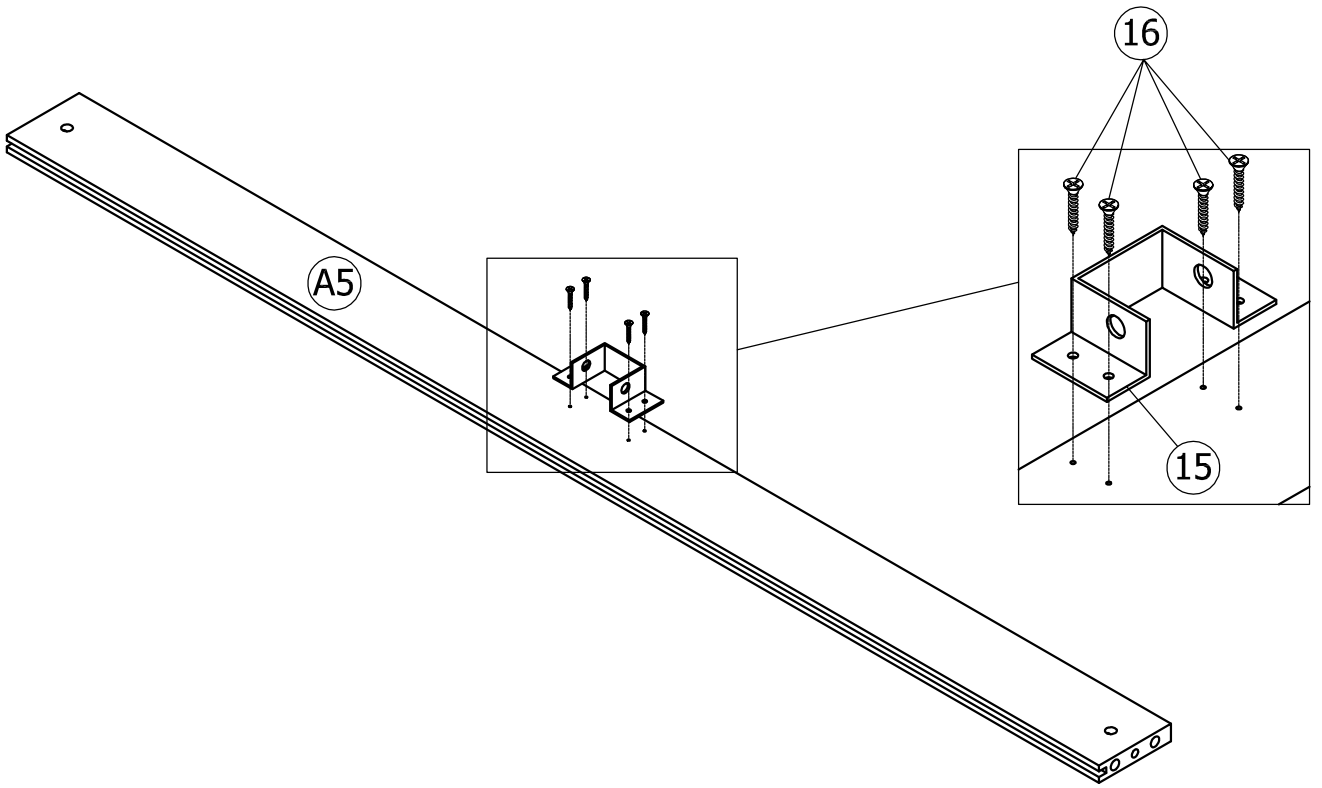

STEP 2:

2	3	5
3(pcs)	3(pcs)	2(pcs)

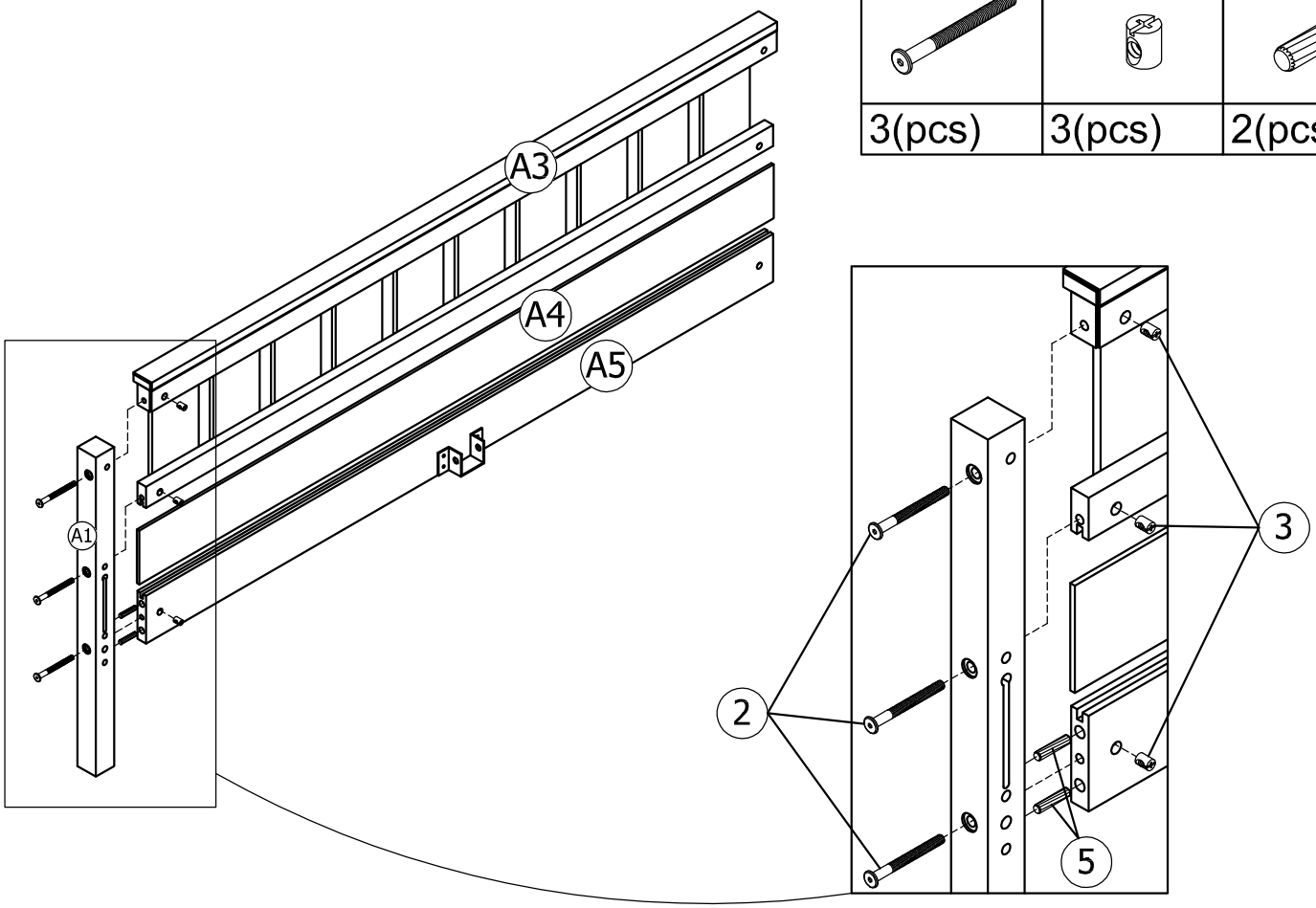

06/19

STEP 3:

2	3	5
3(pcs)	3(pcs)	2(pcs)

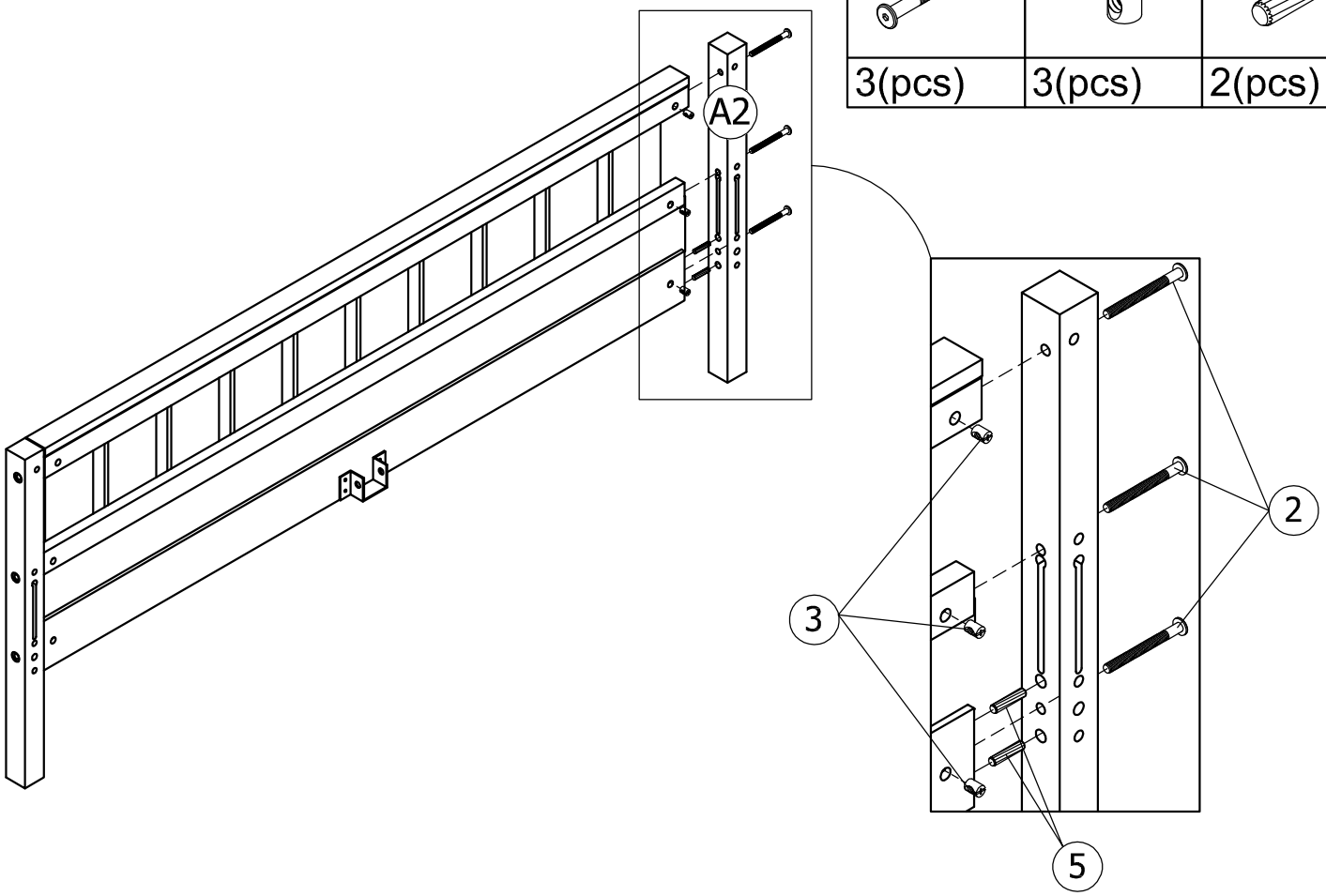

STEP 4:

2	3	5
3(pcs)	3(pcs)	2(pcs)

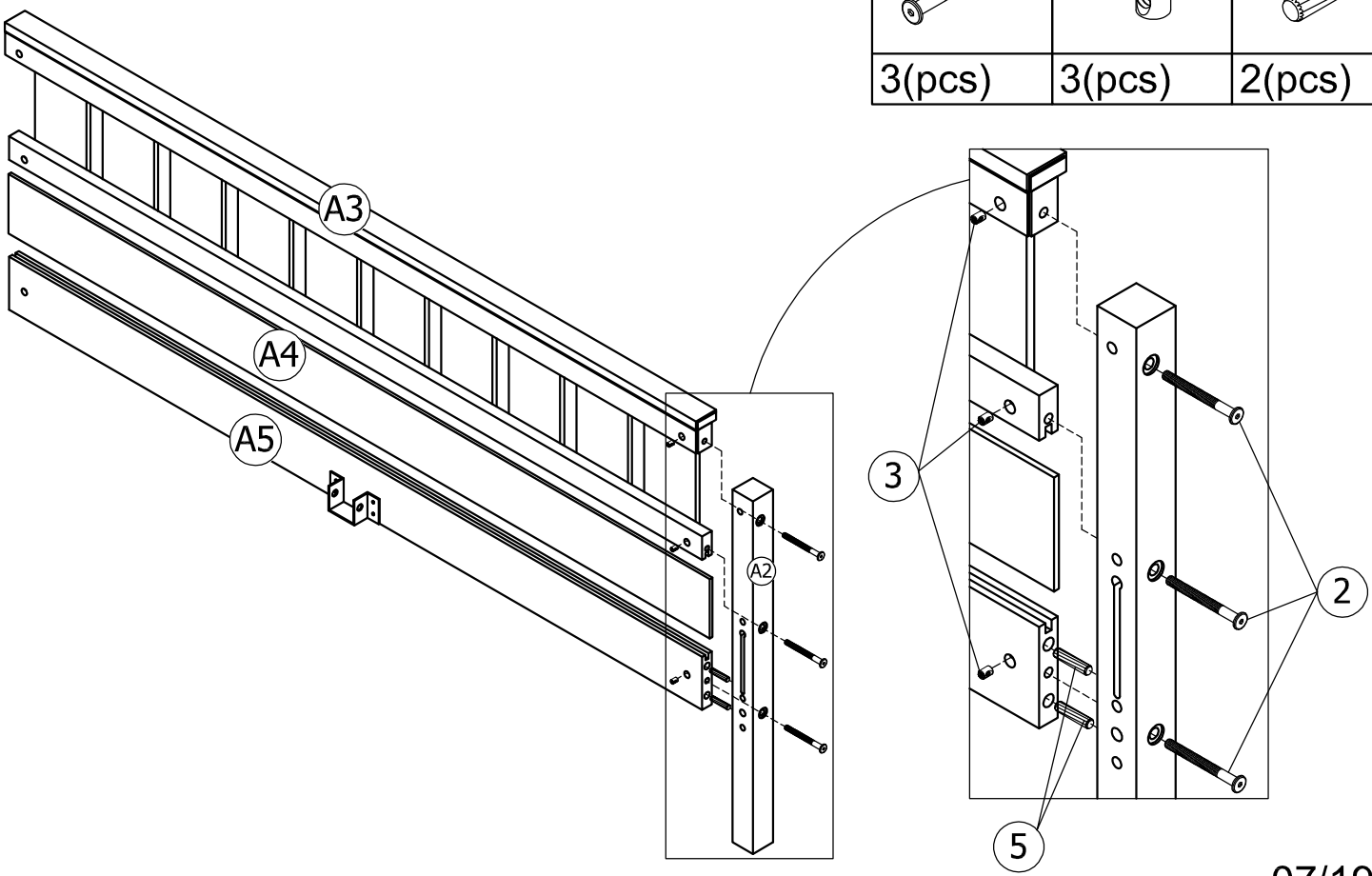

07/19

STEP 5:

2	3	5
3(pcs)	3(pcs)	2(pcs)

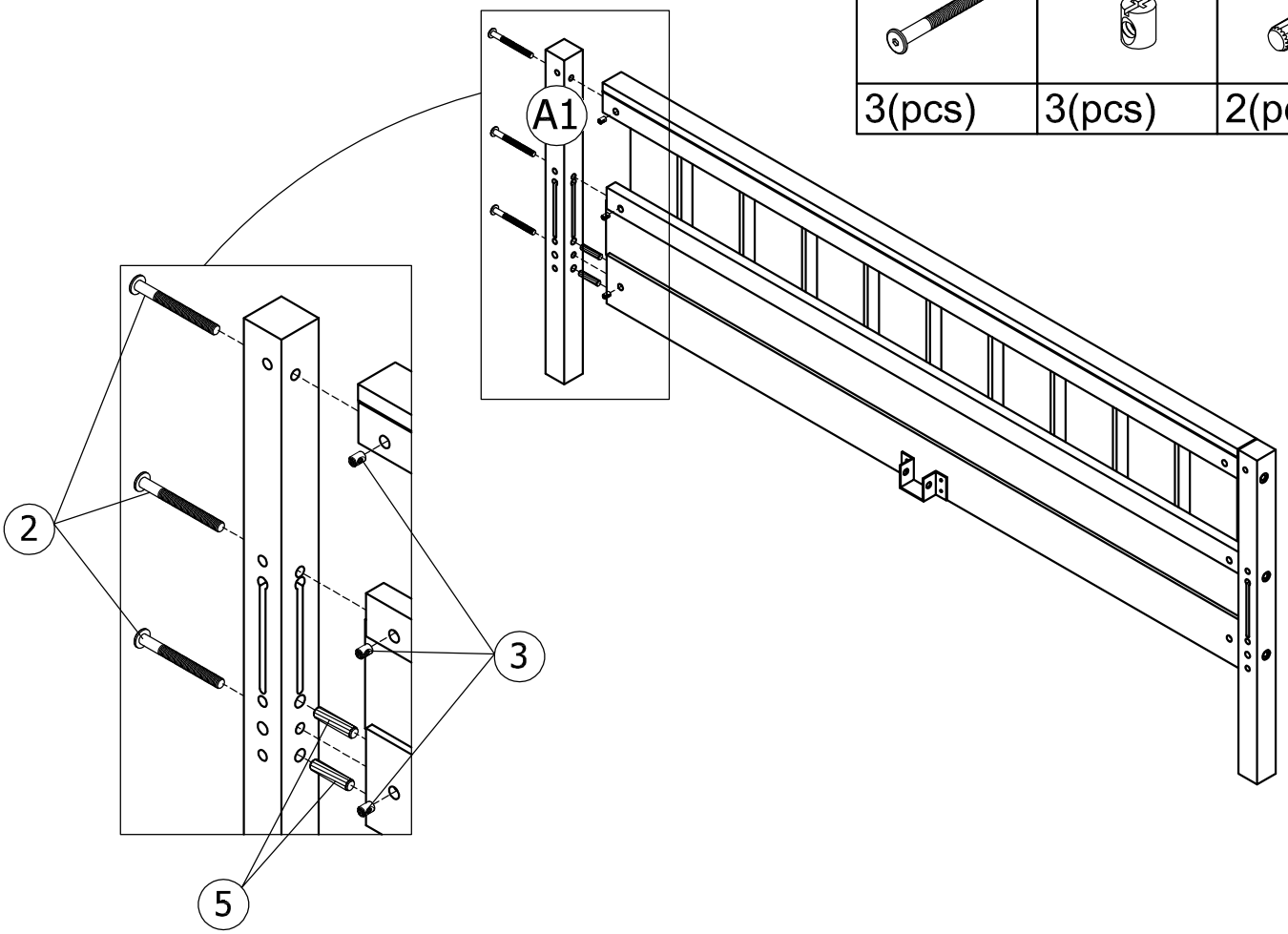

STEP 6:

8	13
4(pcs)	8(pcs)

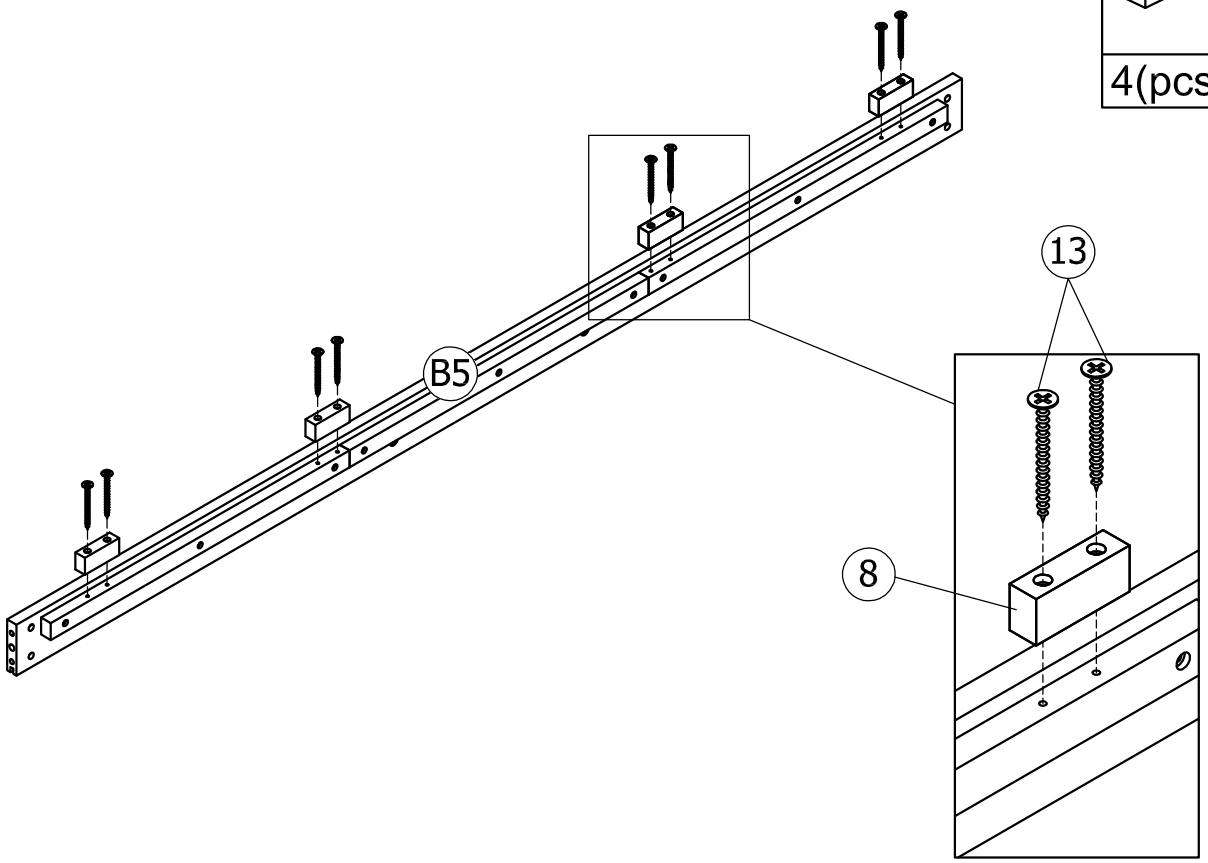

08/19

STEP 7:

2	3	5
4(pcs)	4(pcs)	1(pcs)

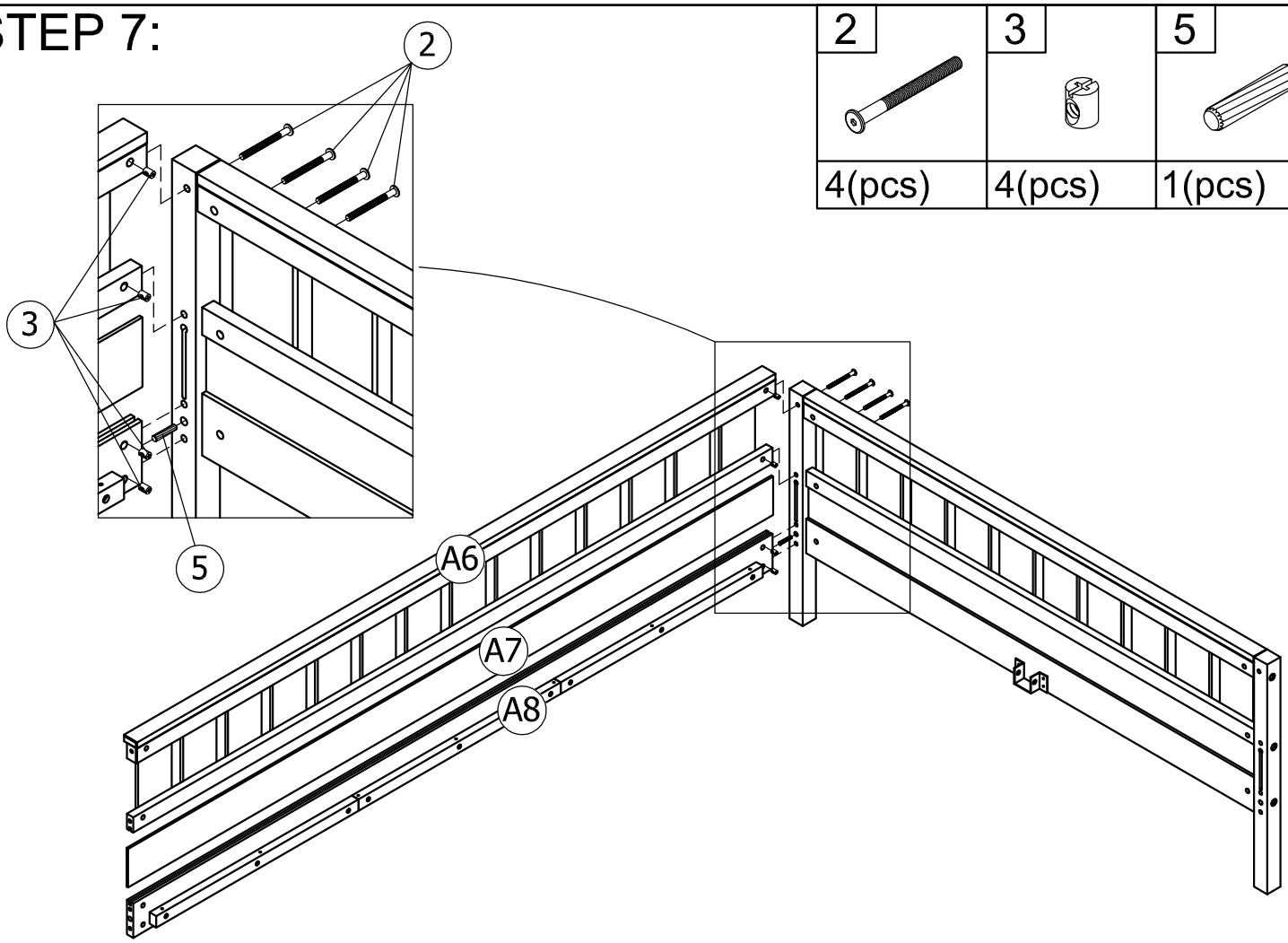

STEP 8:

2	3	5
8(pcs)	8(pcs)	3(pcs)

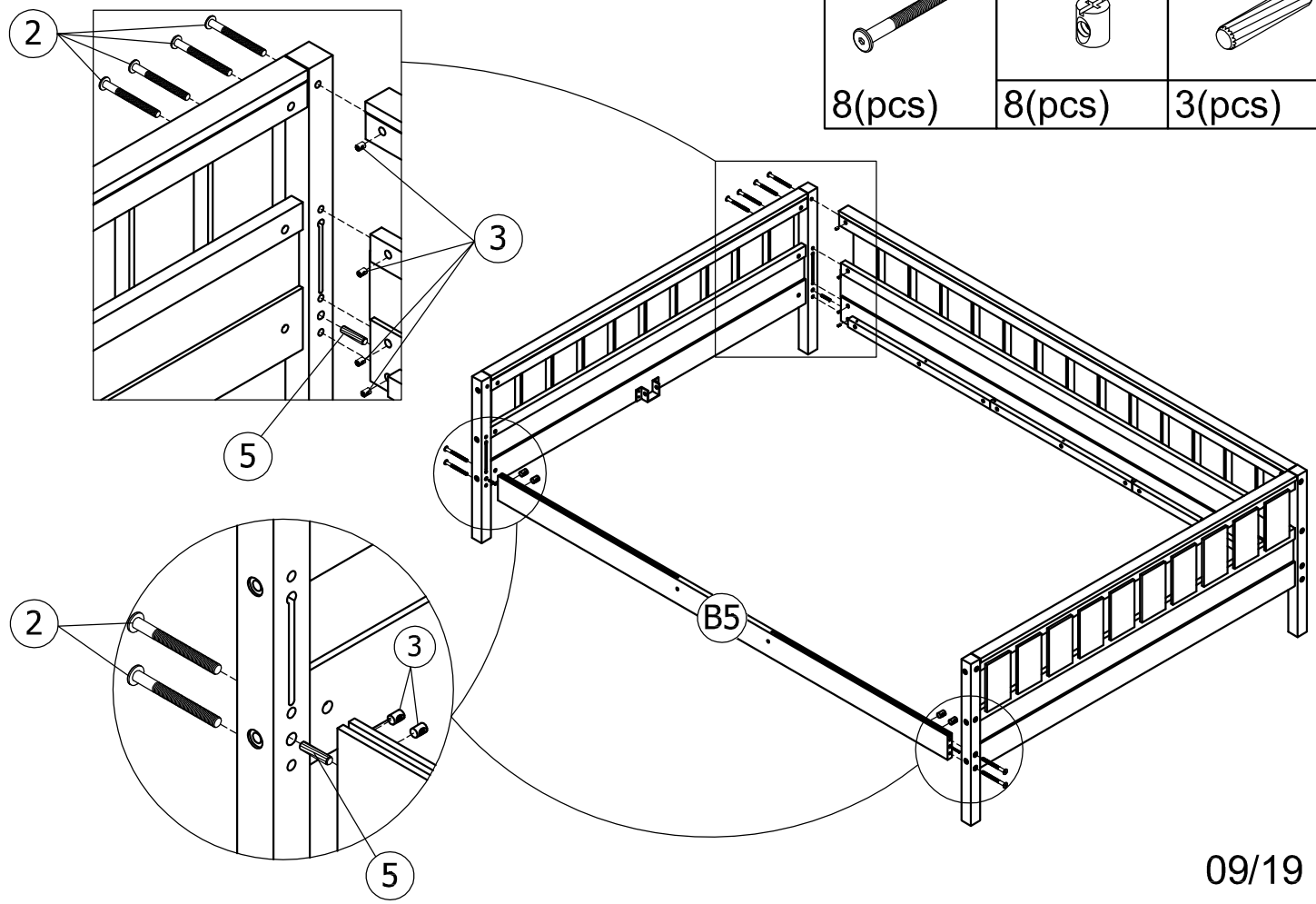

09/19

STEP 9:

2	3	6
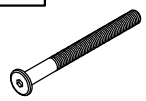		
8(pcs)	8(pcs)	2(pcs)

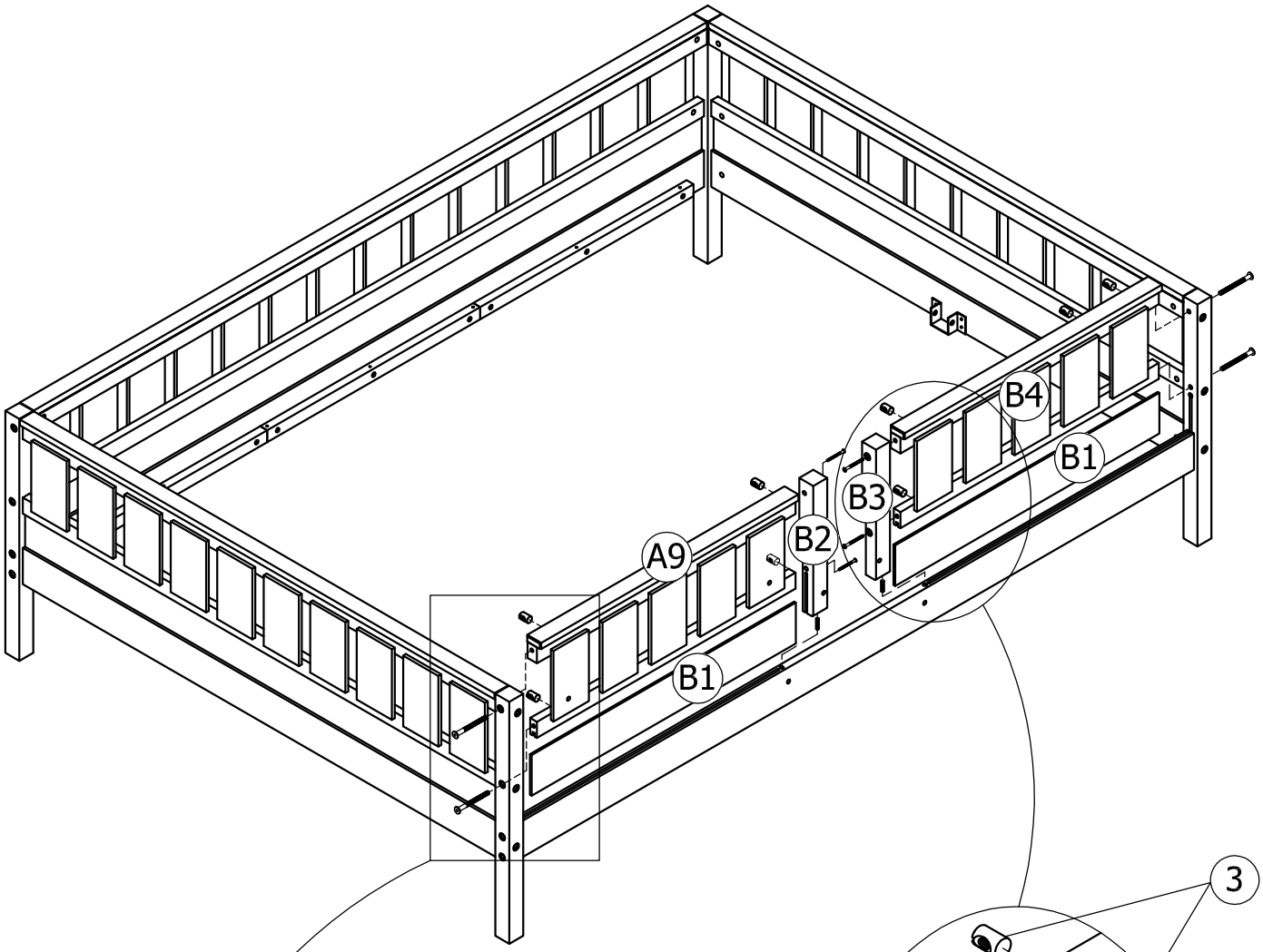

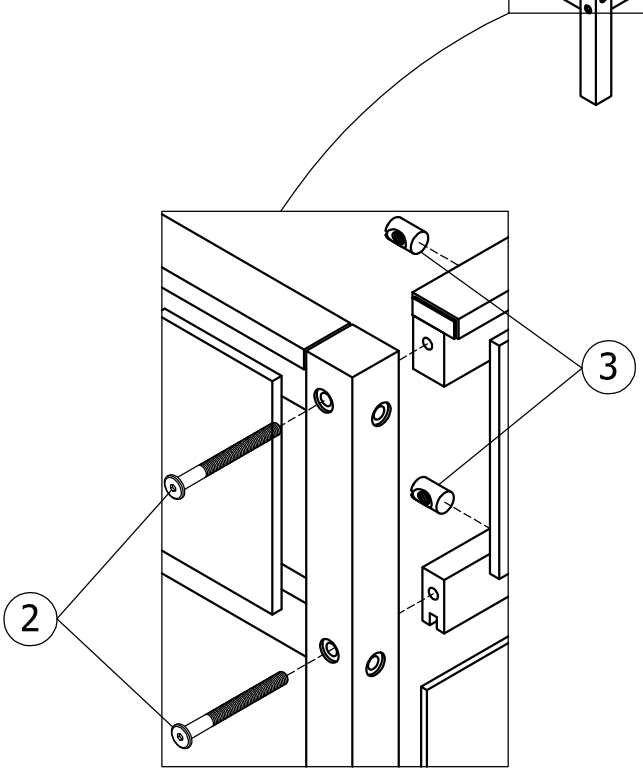

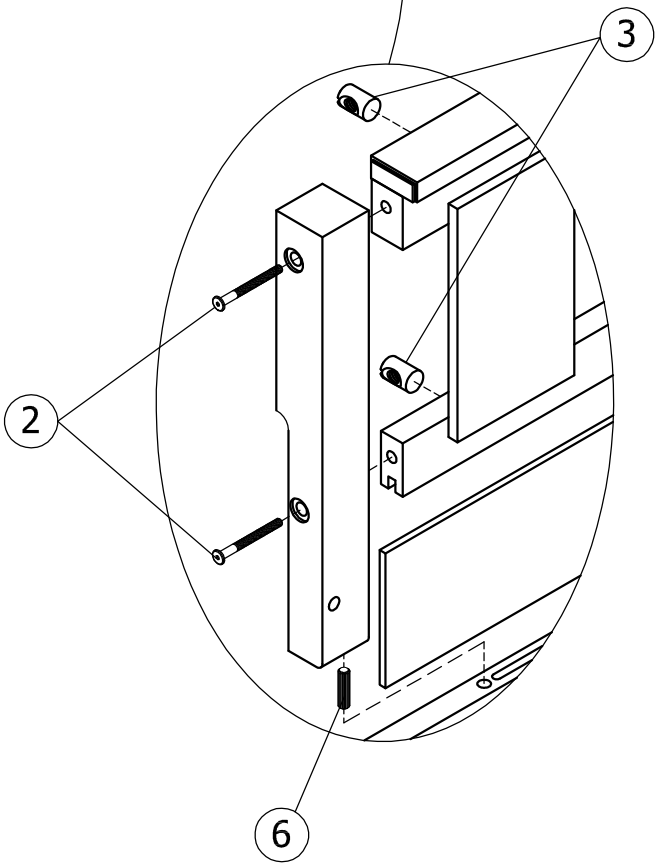

STEP 10:

11	12
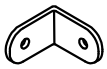	
4(pcs)	4(pcs)

STEP 11:

11	12
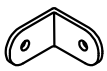	
4(pcs)	4(pcs)

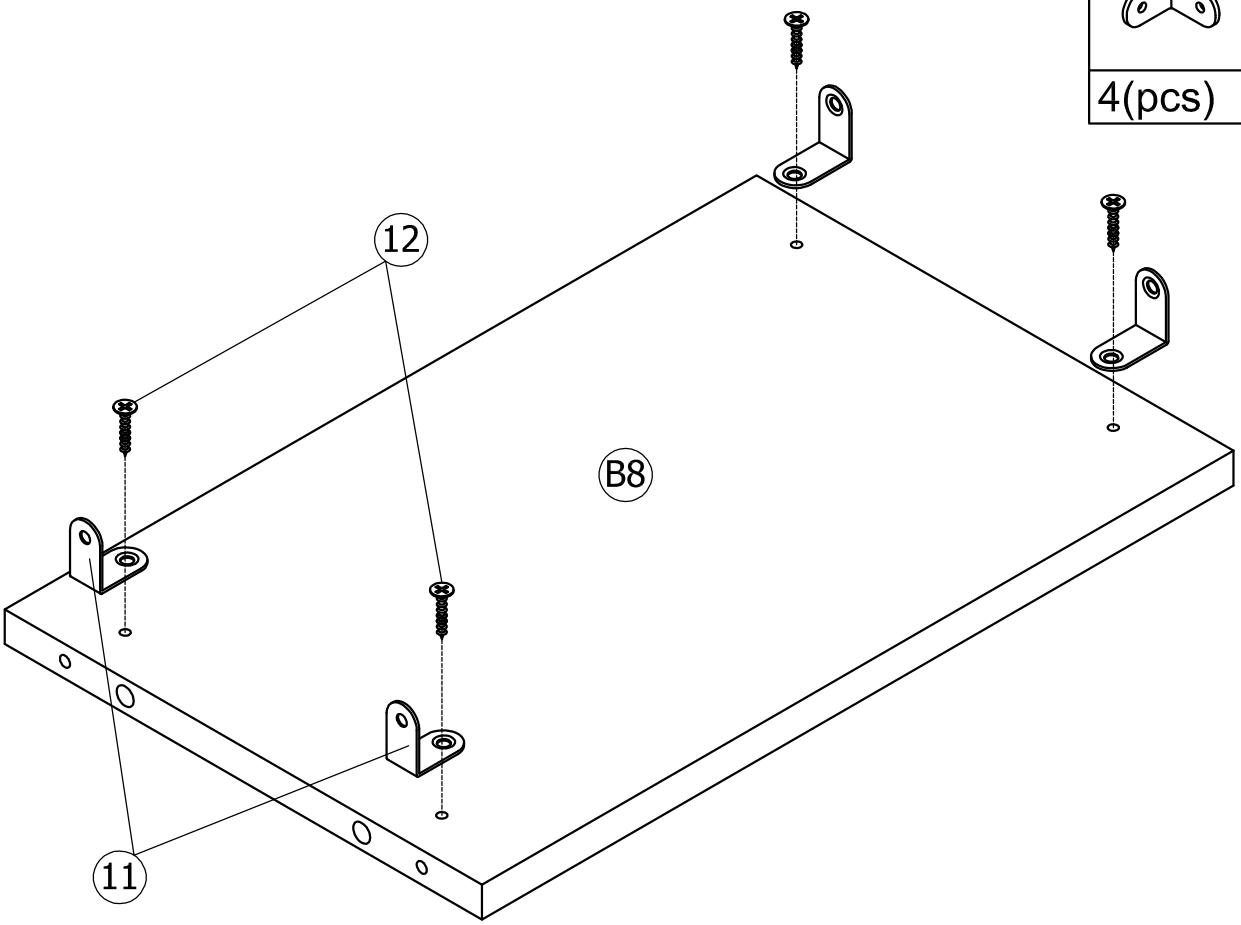

STEP 12:

6	10
8(pcs)	6(pcs)

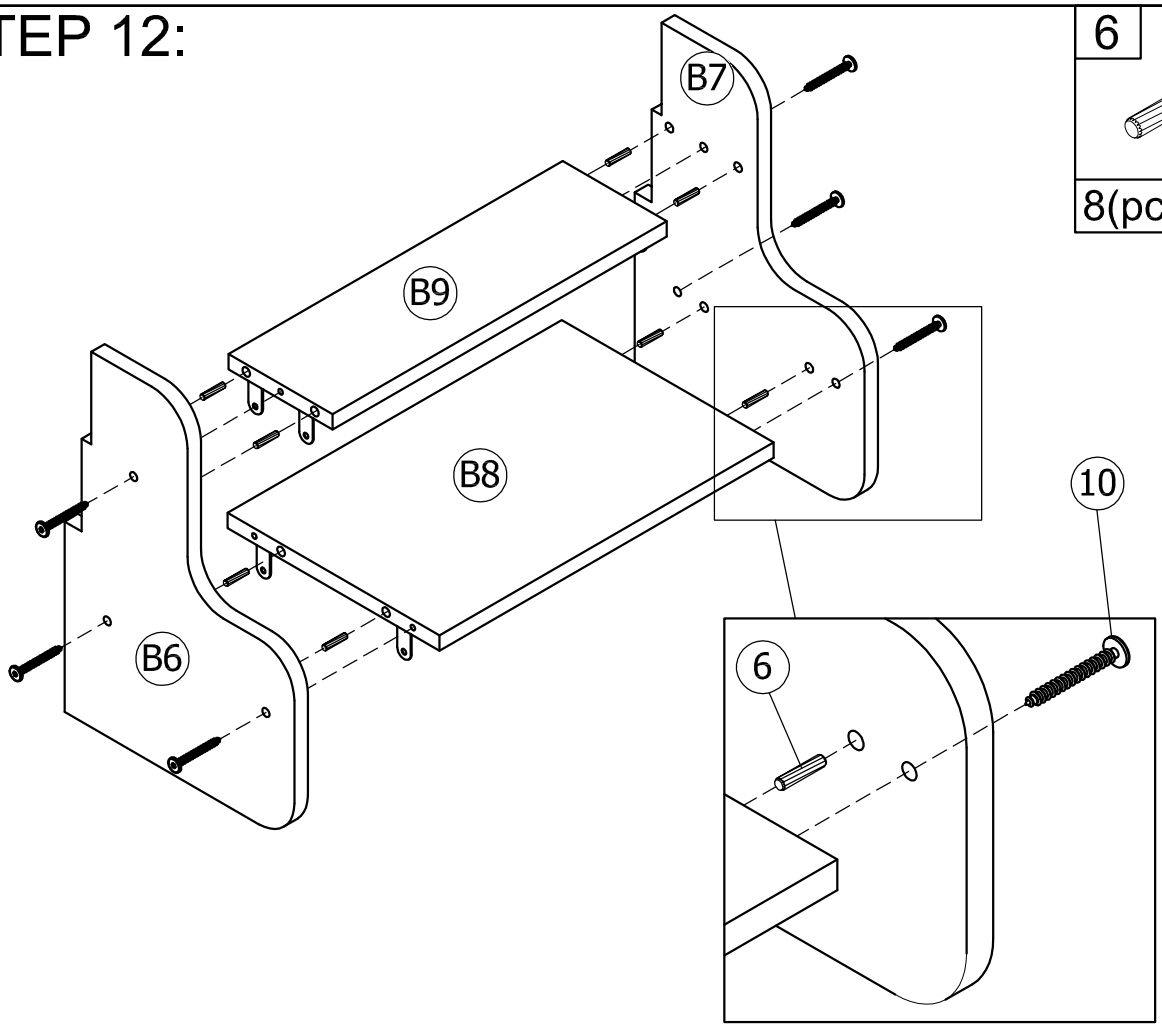

STEP 13:

12
8(pcs)

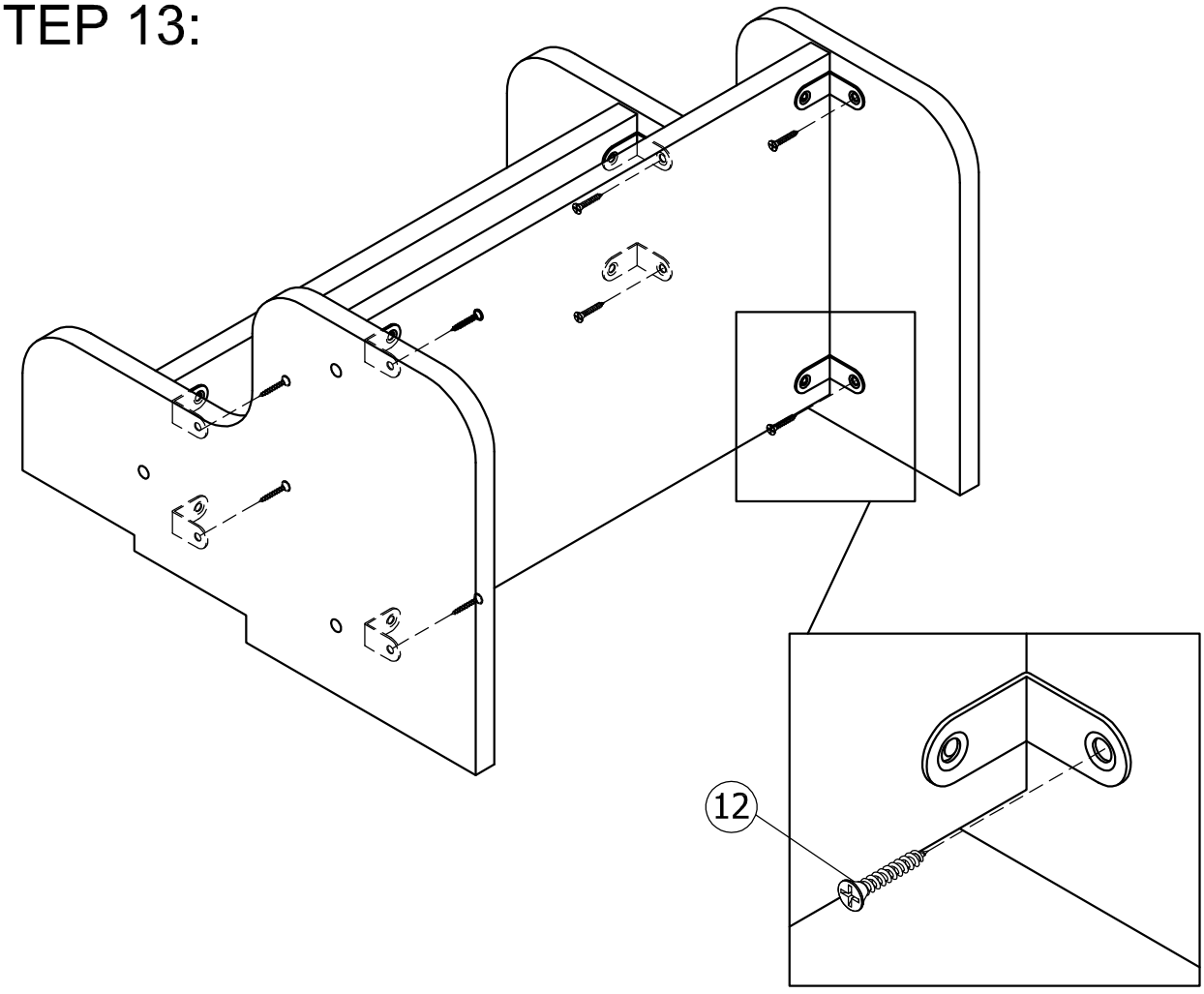

STEP 14:

7	13
2(pcs)	1(pc)

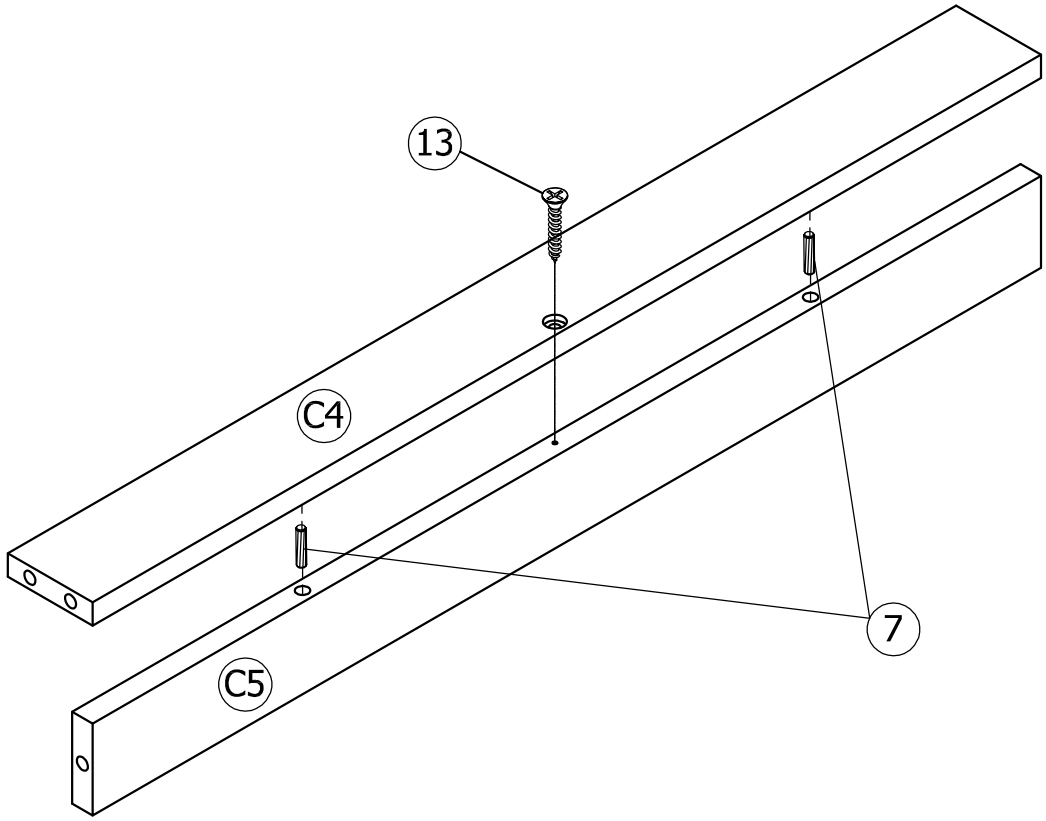

STEP 15:

7
6(pcs)

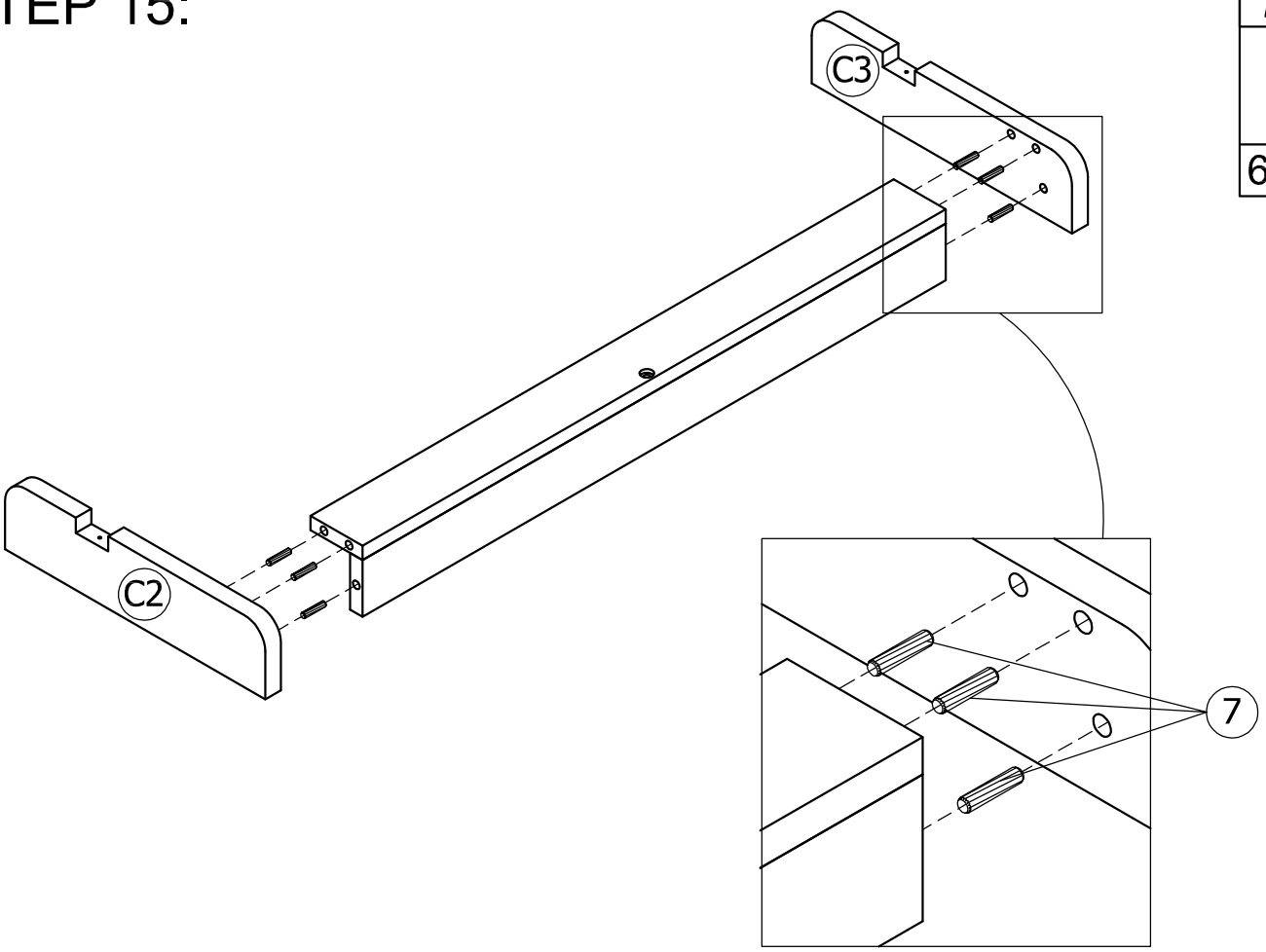

STEP 16:

13



2pcs

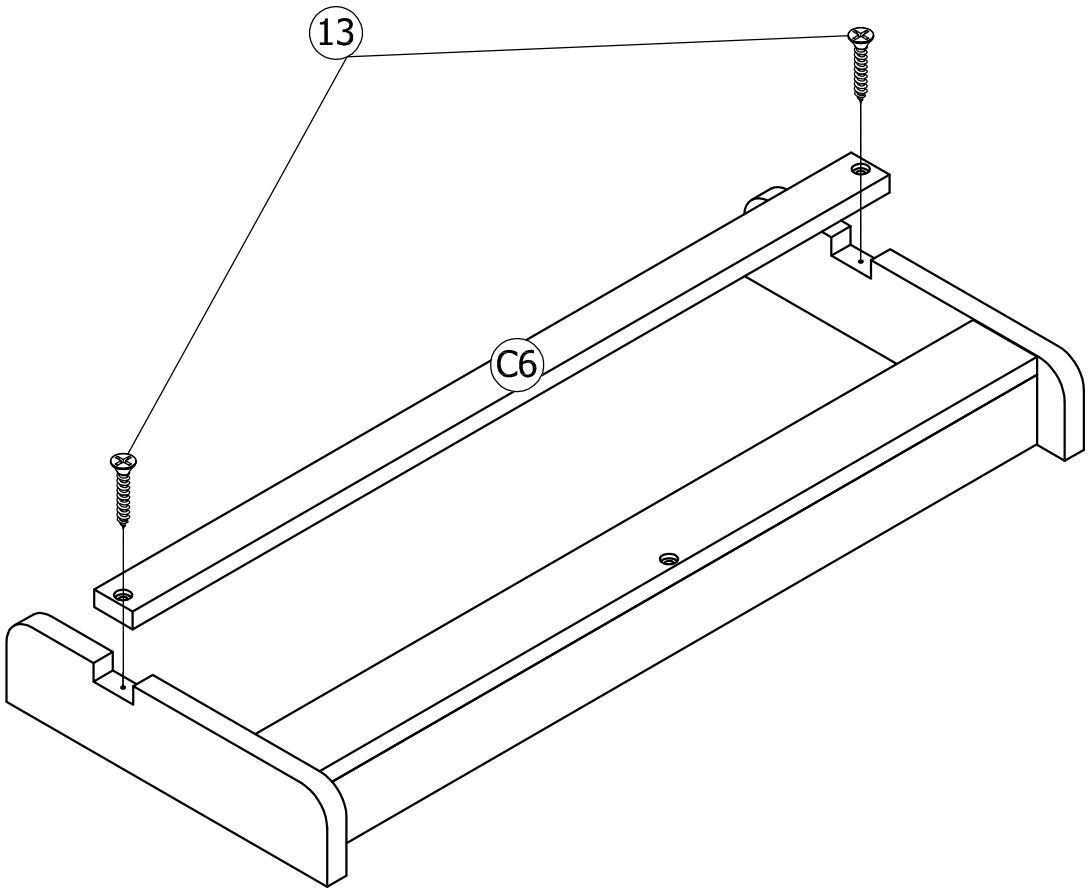

STEP 17:

7



6(pcs)

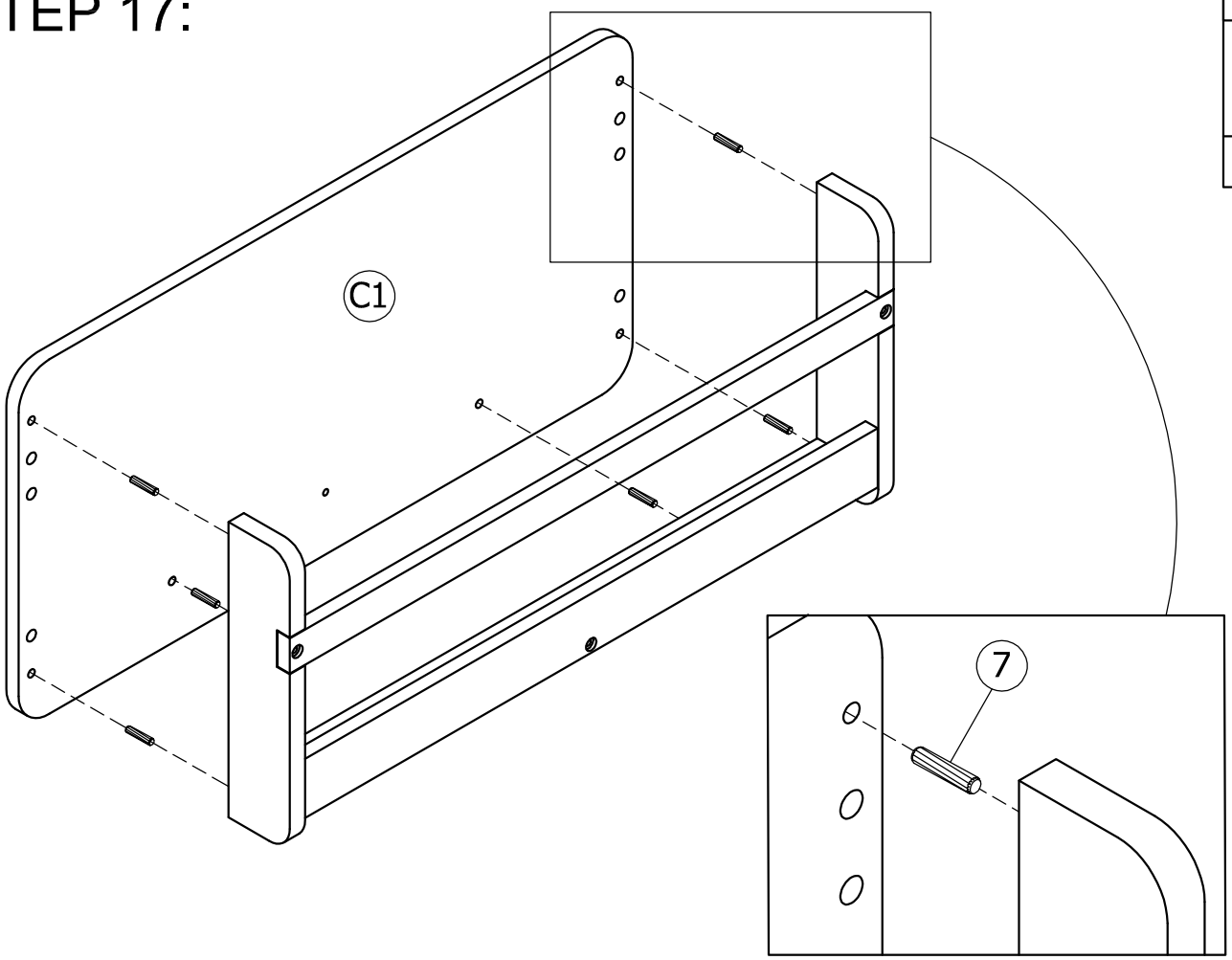

STEP 18:

1	13
4(pcs)	1pc

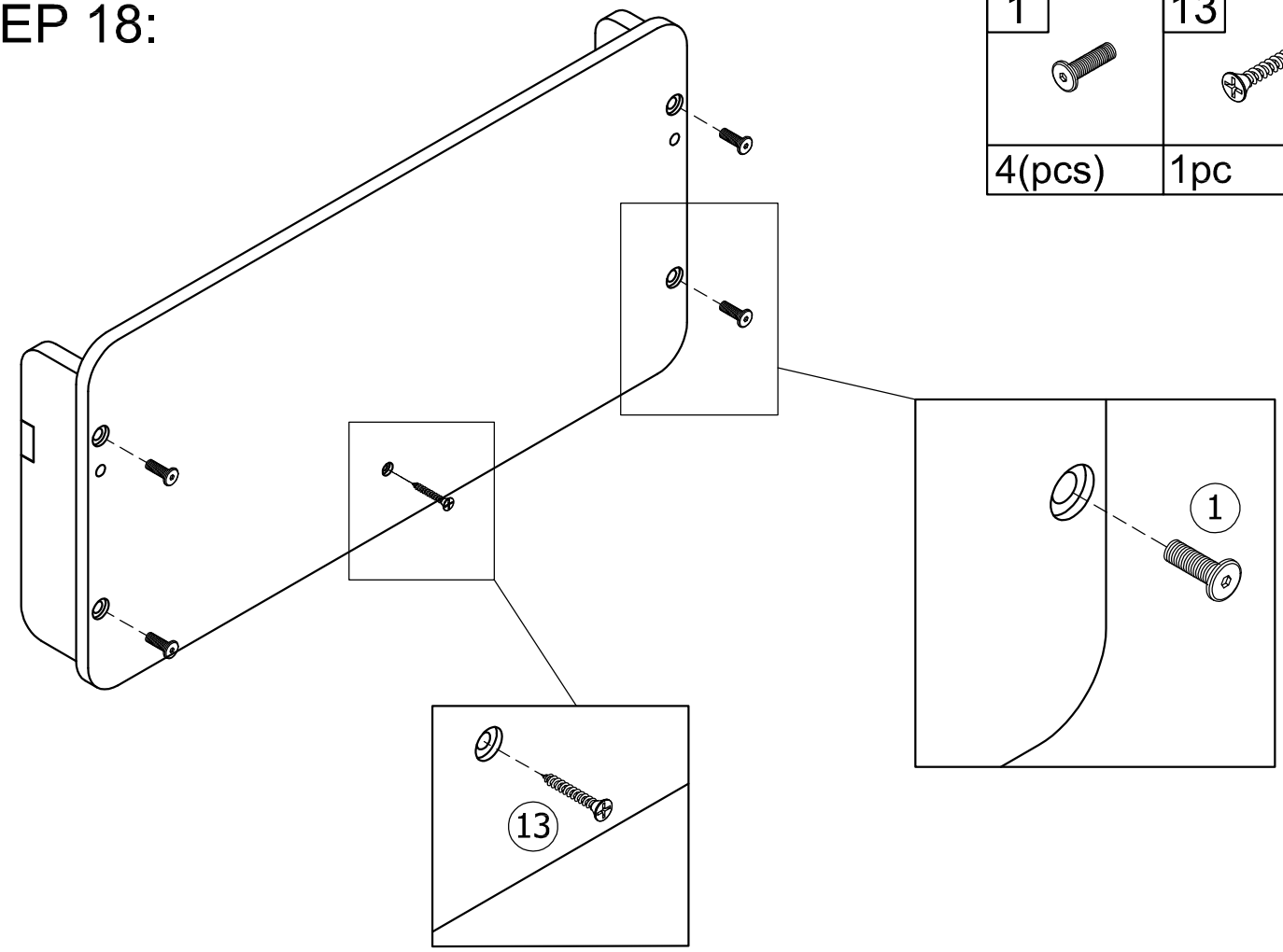

STEP 19:

9	10
2(pcs)	2(pcs)

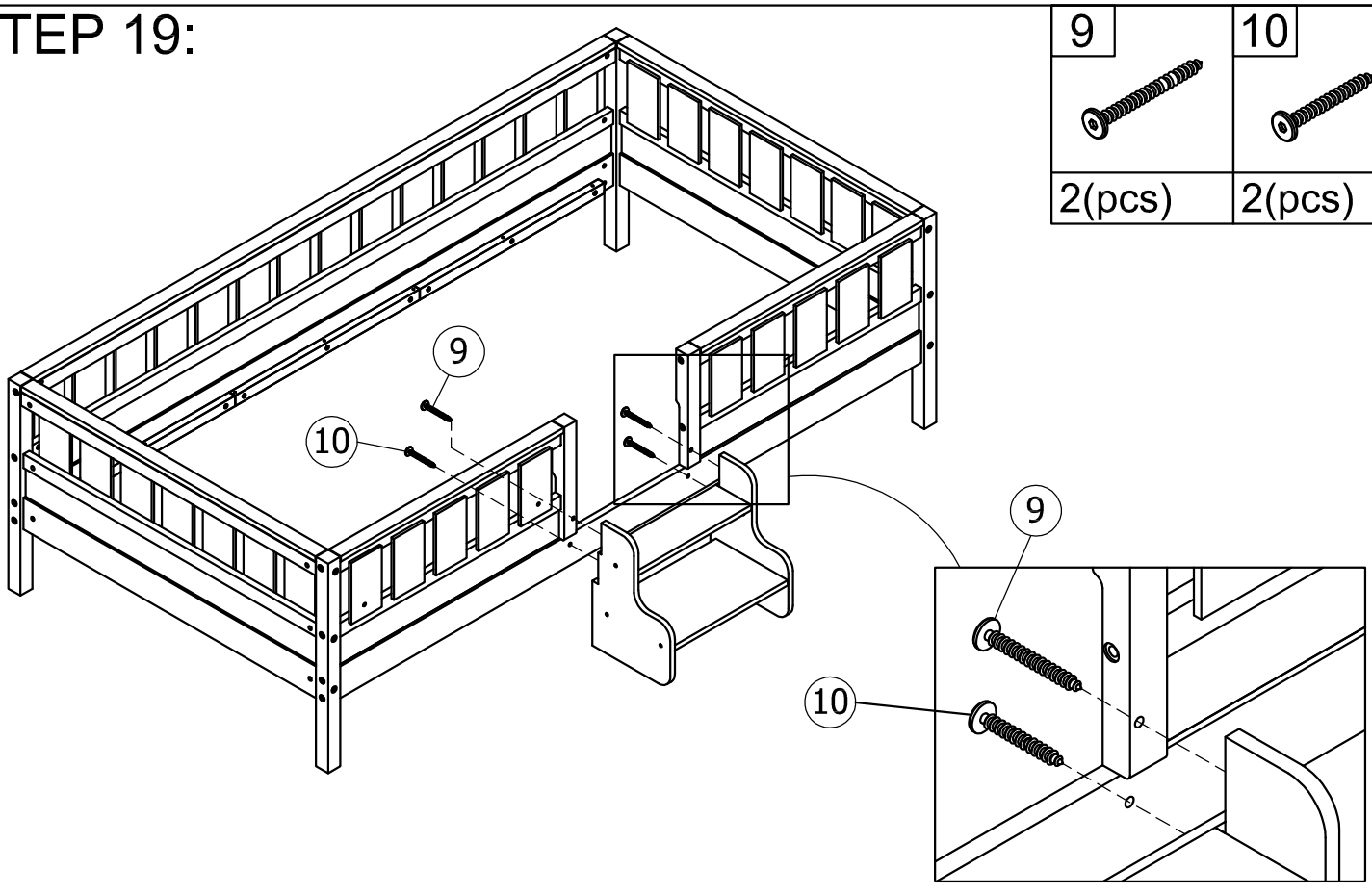

STEP 20:

4

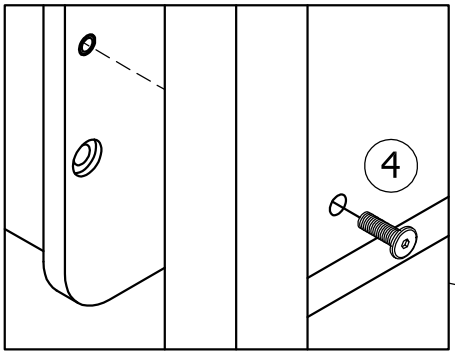

2(pcs)

STEP 21:

13

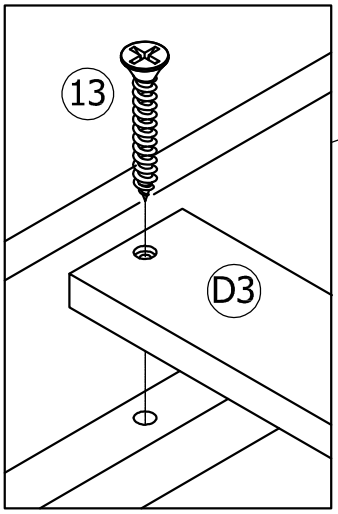

14(pcs)

STEP 22:

13

8(pcs)

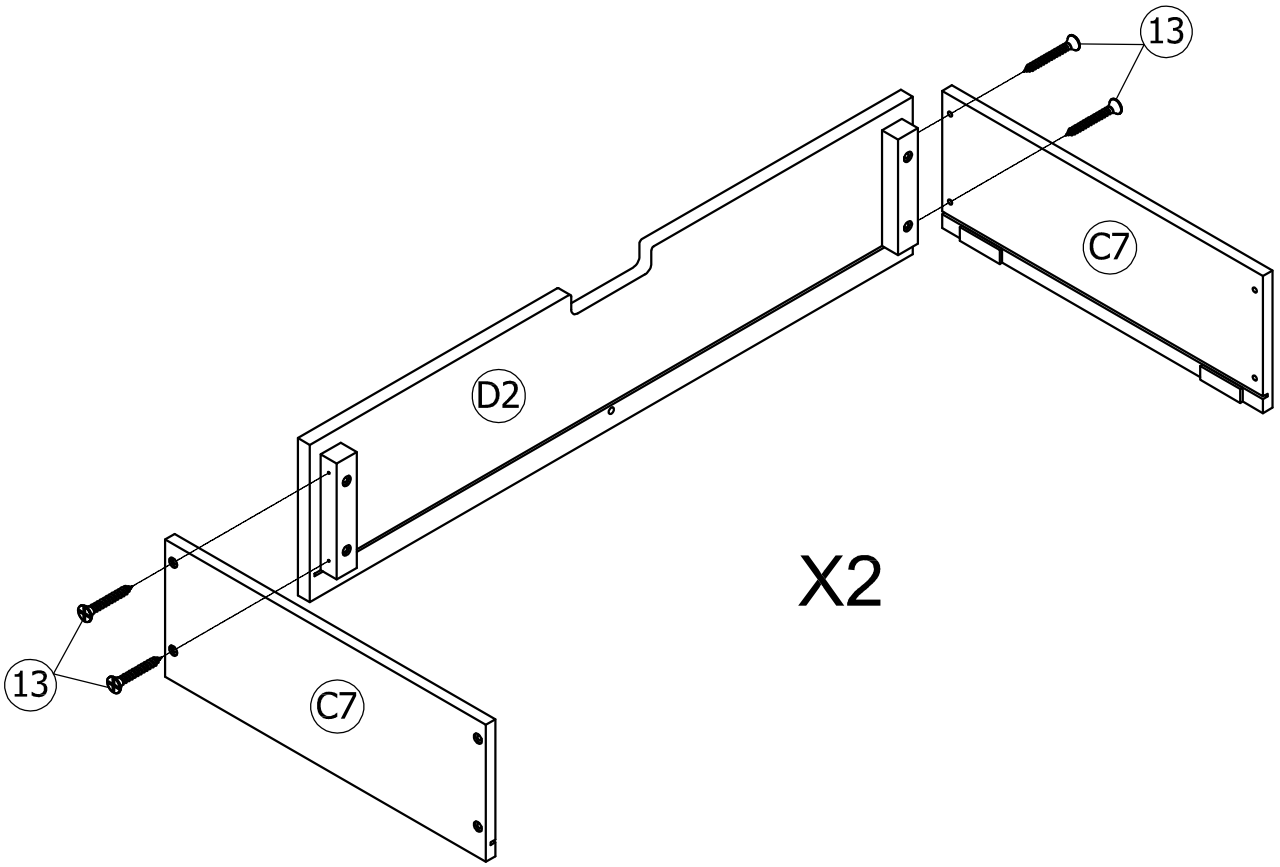

STEP 23:

7



2(pcs)

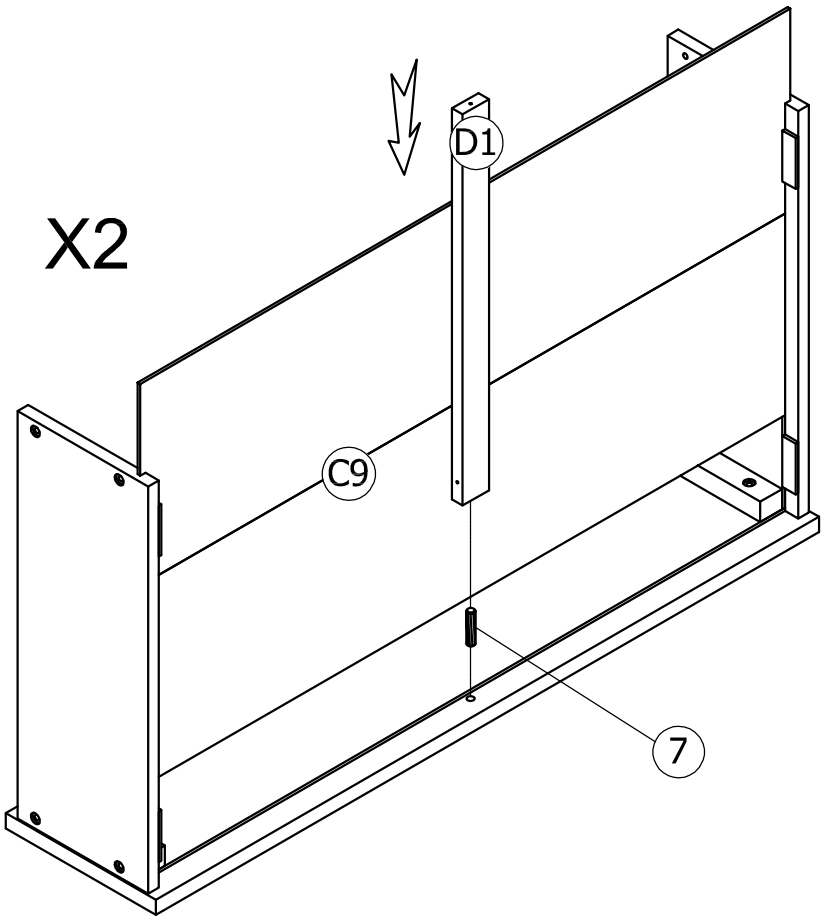

STEP 24:

13	11	12
10(pcs)	2(pcs)	4(pcs)

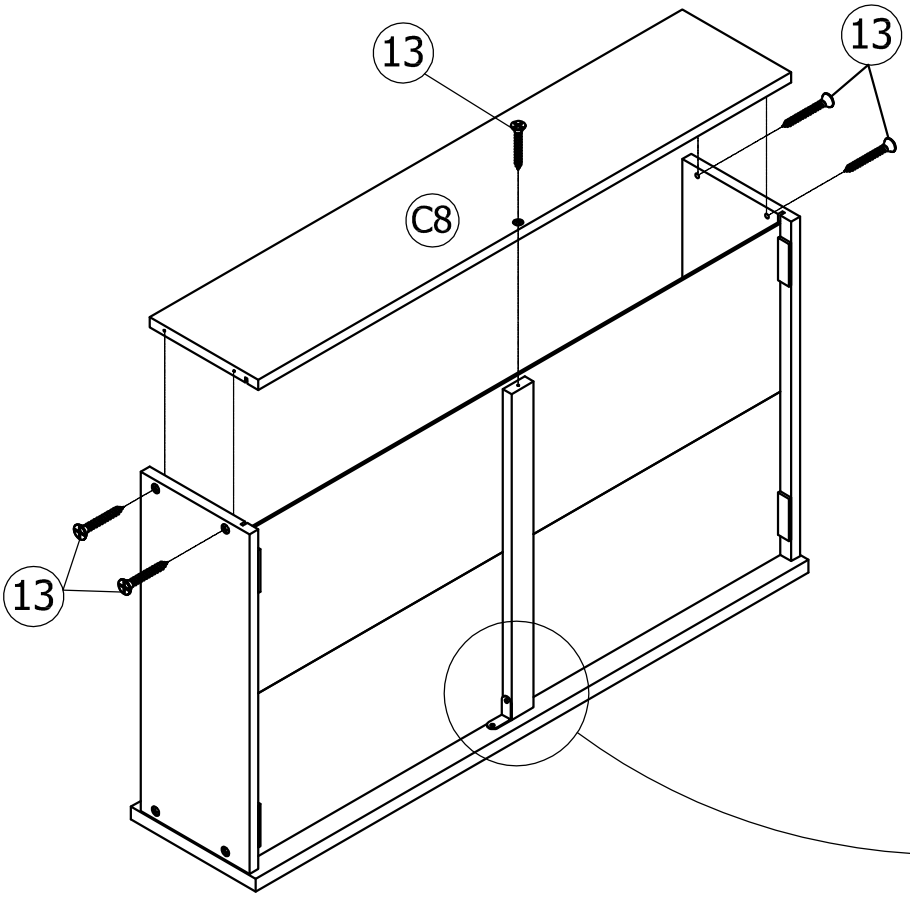

X2

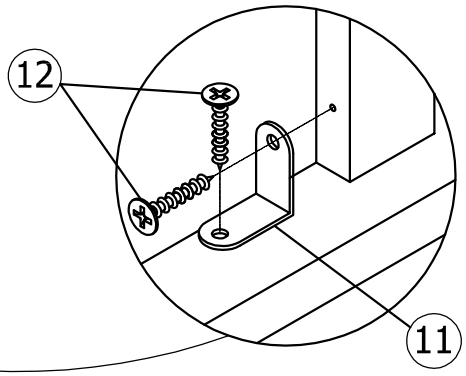

STEP 25:

14	12
8(pcs)	32(pcs)

X2

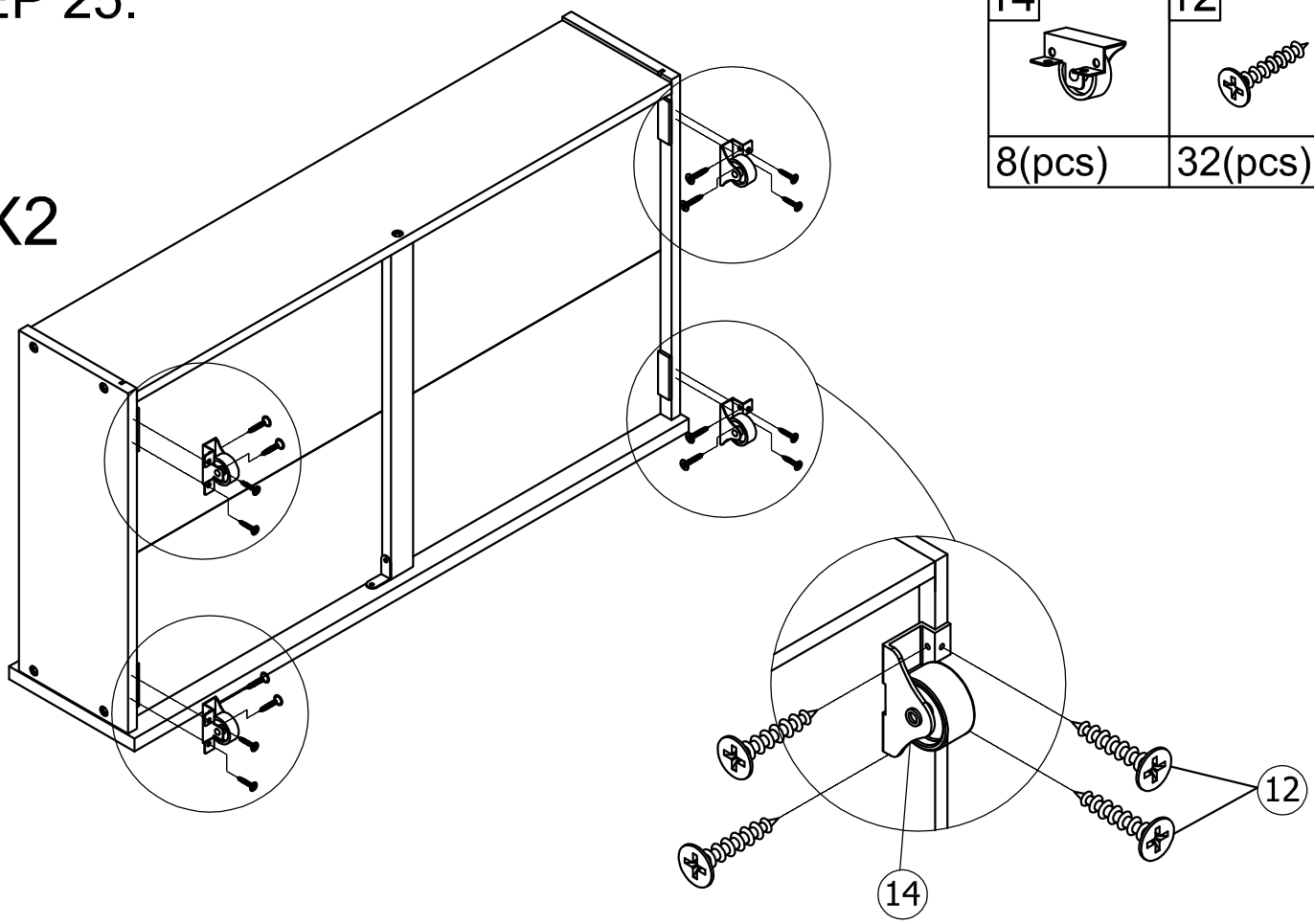

STEP 26:

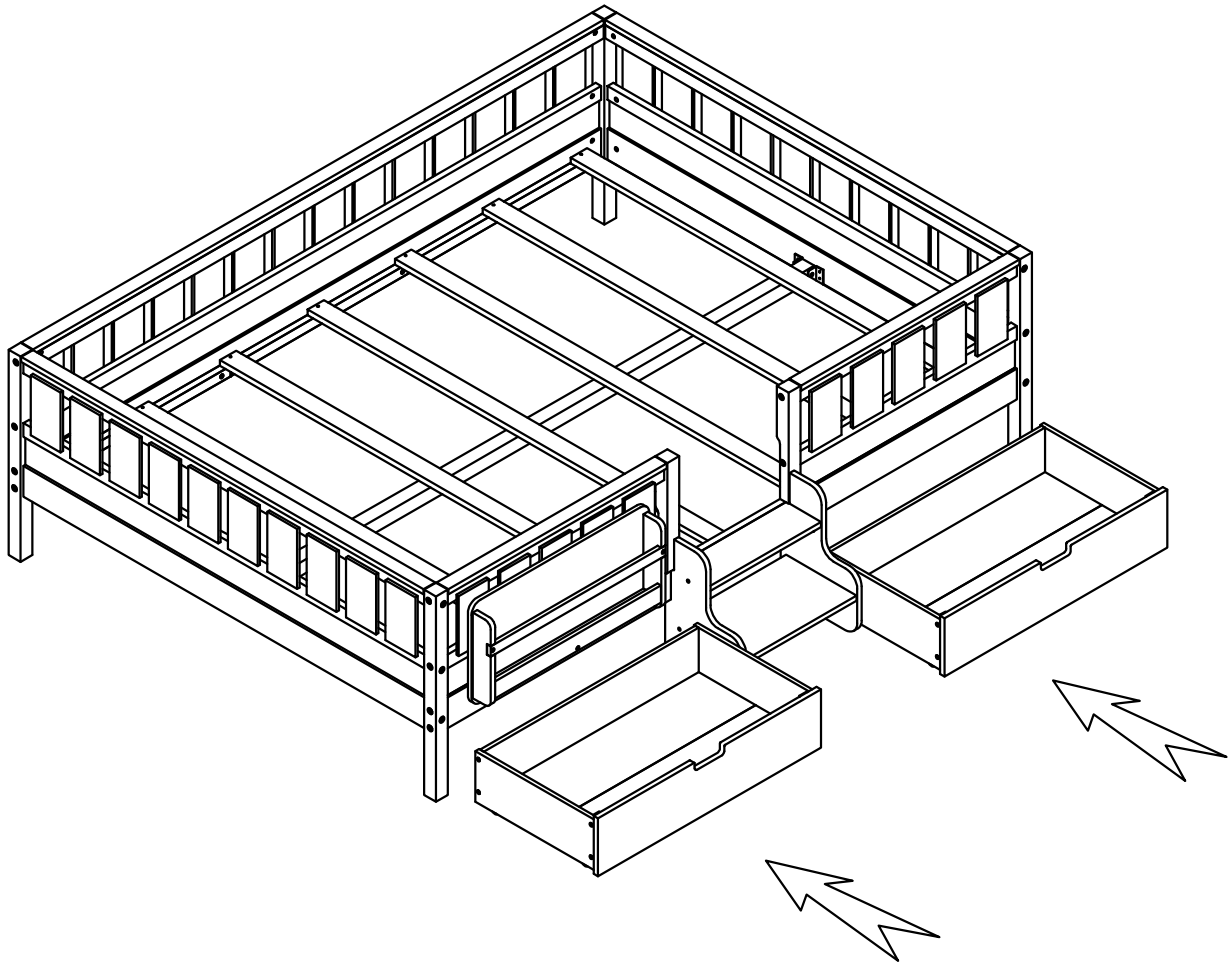

Finish:

