Assembly Instruction

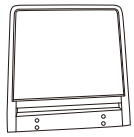	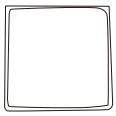			 M6x18mm	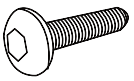 M6x40mm	
Ax1	Bx1	Cx1	Dx1	Ex4	Fx5	Gx1

Step 1

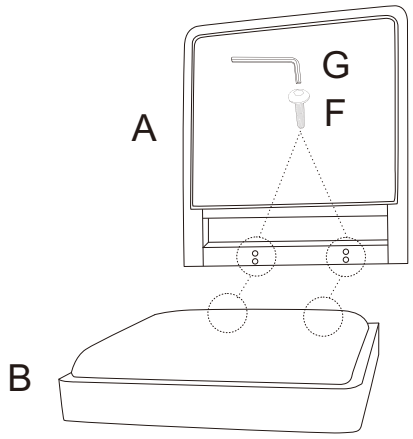

Step 2

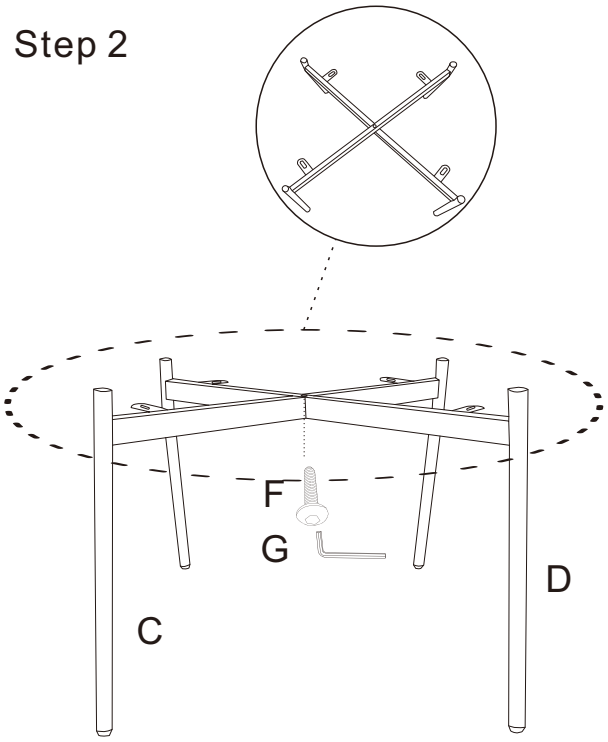

Step 3

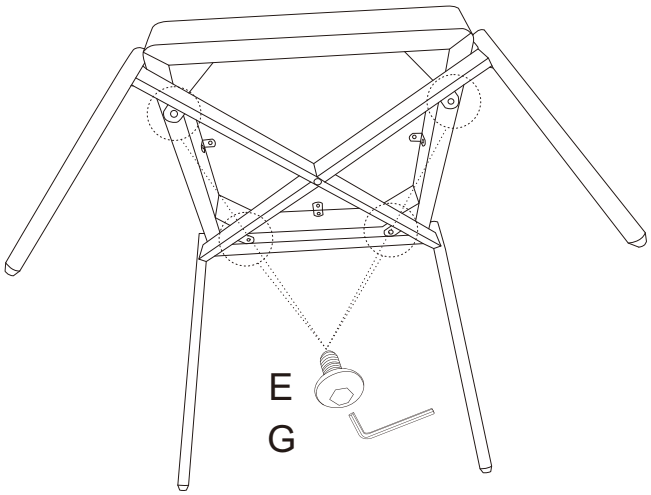

Step 4

