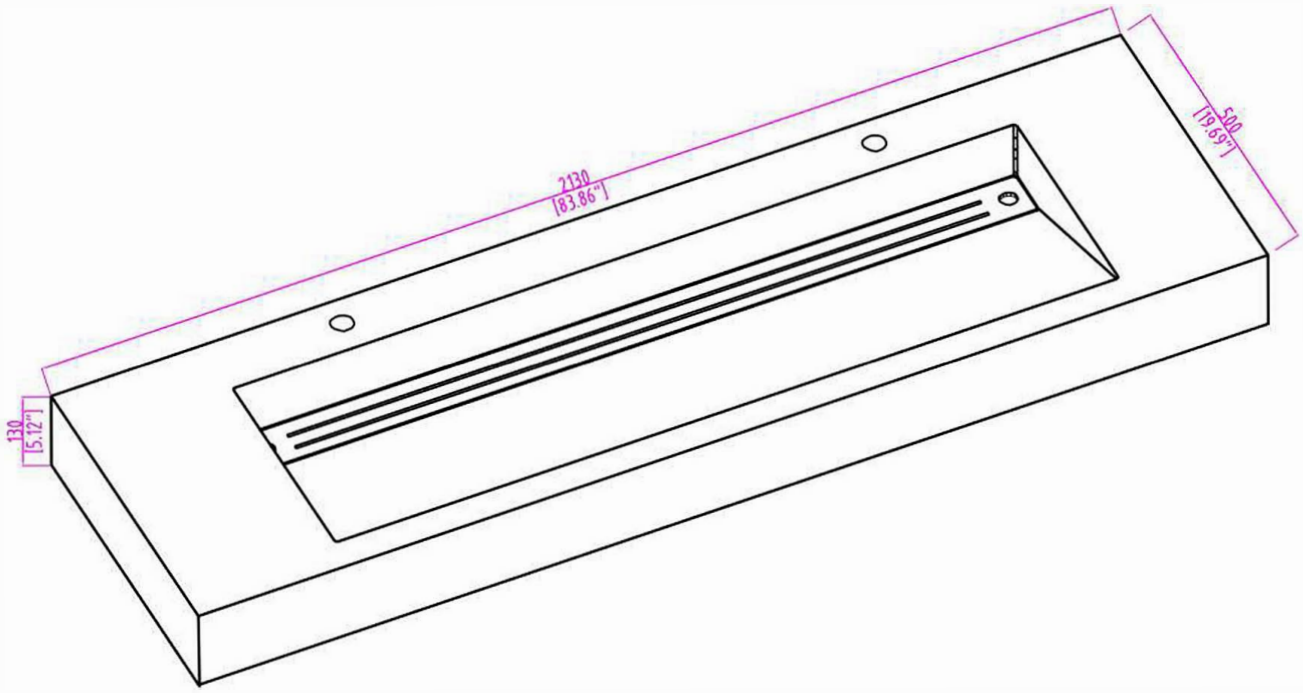
2130
[83.86"]
500
[19.69"]
130
[5.12"]

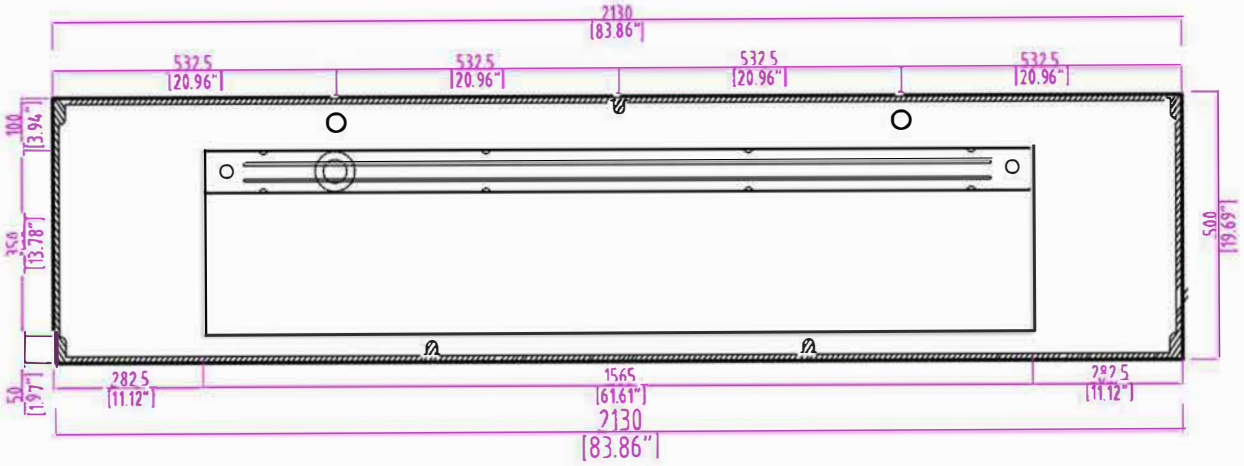
2130
[83.86"]
532.5
[20.96"]
532.5
[20.96"]
532.5
[20.96"]
532.5
[20.96"]
100
[3.94"]
350
[13.78"]
50
[1.97"]
500
[19.69"]
282.5
[11.12"]
1565
[61.61"]
282.5
[11.12"]
2130
[83.86"]

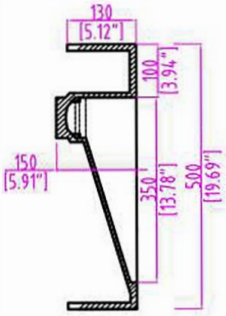
130
[5.12"]
100
[3.94"]
150
[5.91"]
350
[13.78"]
500
[19.69"]