INSTALLATION SPECIFICATION

SKU	65037-CTP-AW
Product Dimensions	37" W x 22" D x 8"H
Carton Dimensions	39.8" W x 24" D x 10.2"H
Weight	77.7 lbs
Material	Engineered Stone
Color Finish	Aosta White Finish (AW)
Edge Polishing	Flat Edge
Faucet Hole Spacing(in.)	Single hole
Bowl	Single bowl

All measurements are aoproximate.Measurements may vary +/-1/2"

Valencia

37" x 22"

Bathroom Vanity Top

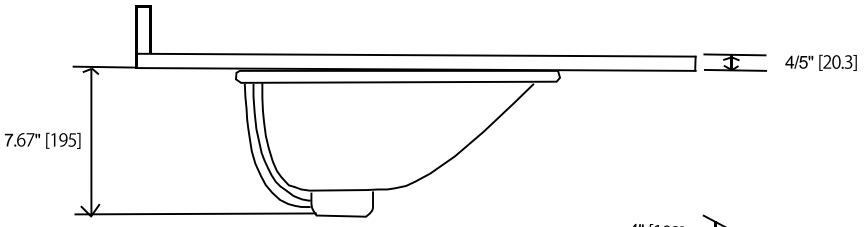

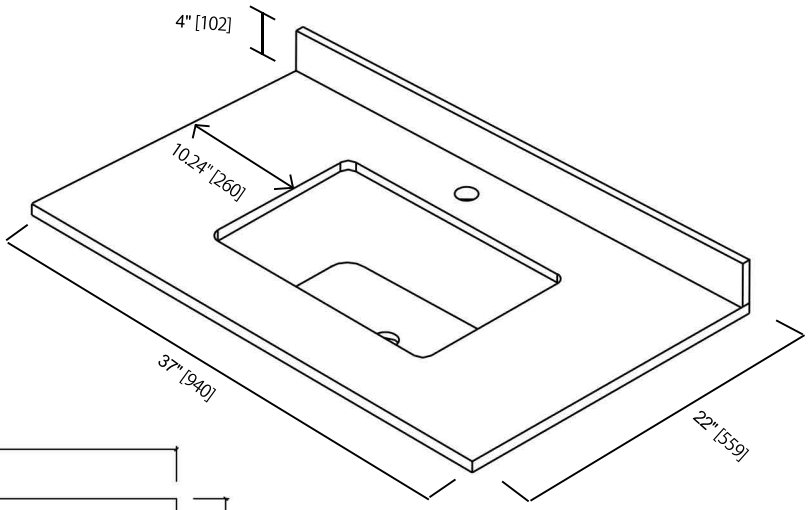

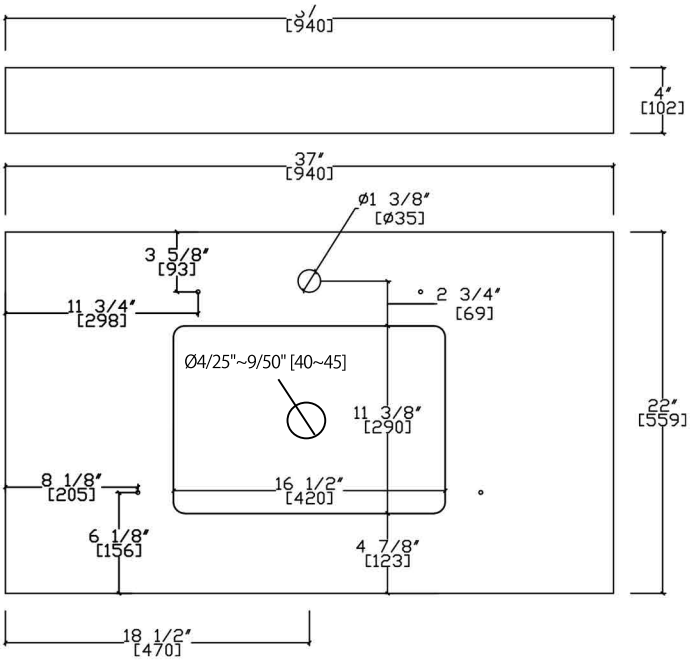

ALTAIR