ITEM NO.	PART NUMBER	DESCRIPTION	QTY.
1	BPRD	Base	1
2	BL2S-1.5	LOWER BALL	1
3	BL2TD-1.25	RING SUPPORT	1
4	HKETS-38	Tube	1
5	BL1T-34	End Ball	1

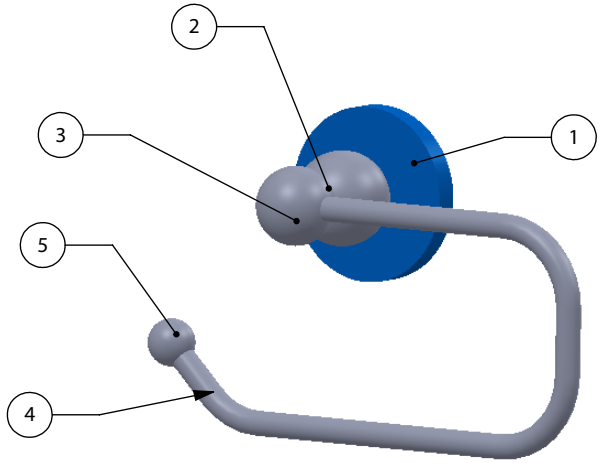

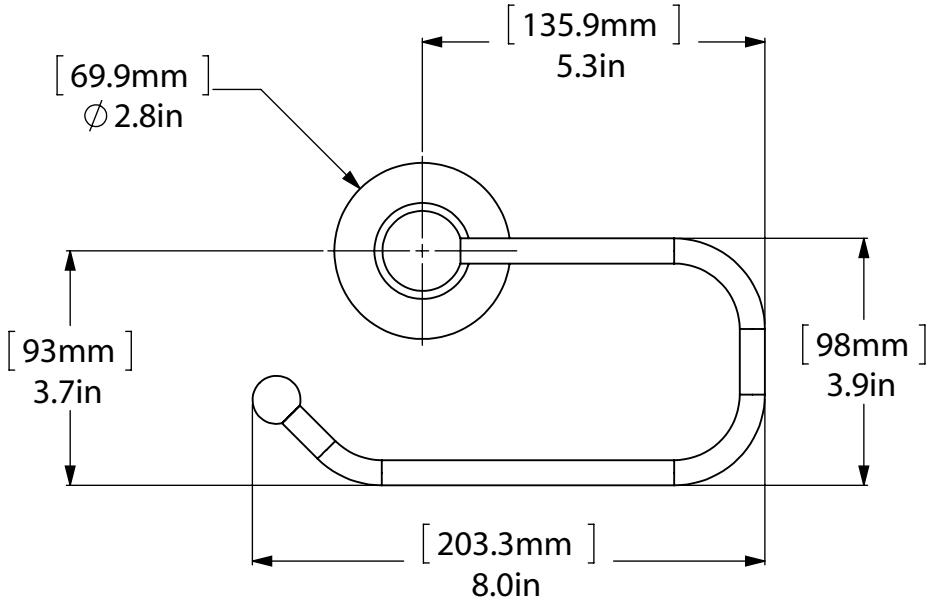

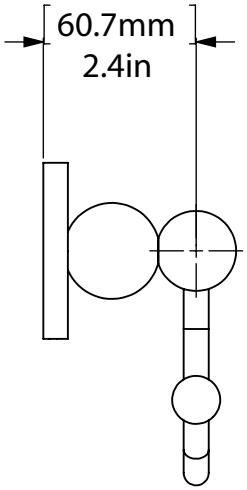

UNLESS OTHERWISE STATED			INITIALS	DATE	ITEM	QTY	DRG/PART NO	CLIENT:
DO NOT SCALE DRAWING	X.XXX +/-0.025	DESIGNED						
CHAMFER ALL EDGES 0.5X45°	X.XX +/-0.1	DRAWN						
DRAWING ISO	X.X +/-0.25	CHECKED						
	X +/-0.75	PROJ.ENG						
	ANGLES	SAFETY						
	X.XX +/-0.05°	APPROVED						
	X.X +/-0.1°							
	X +/-0.5°							
FIRST ANGLE PROJECTION	MACHINED FINISH 3.2							

MATERIAL	BRASS	WEIGHT		FINISH	TBD
HEAT TREAT	NA			QUANTITY	
CUSTOMER		CUSTOMER No		---	

SCALE	1:3	SHEET: 01	A4