Instruction Manual

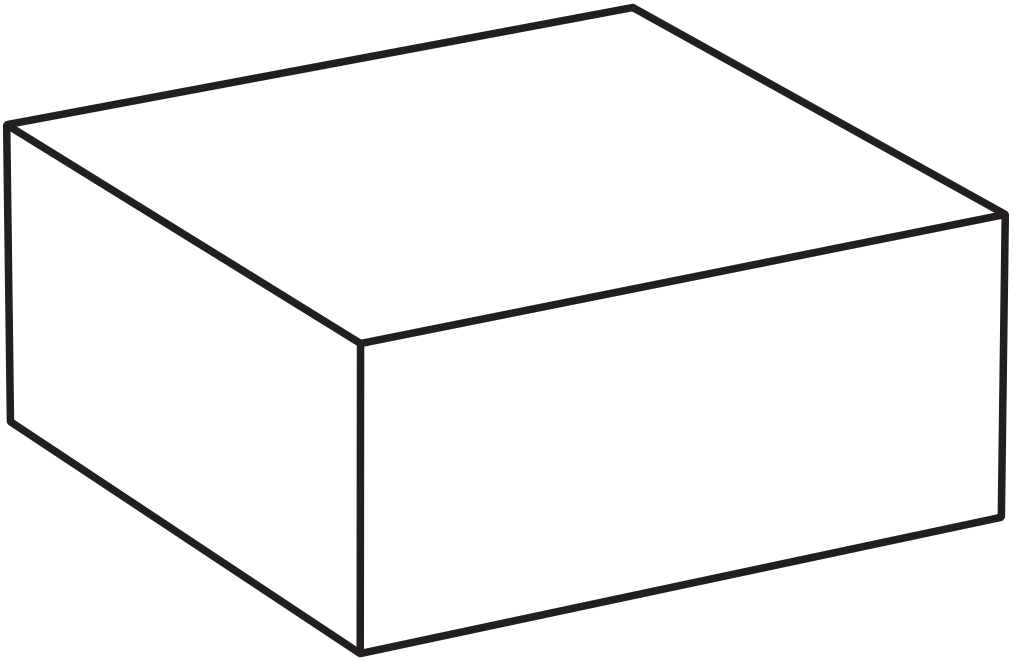

www.festivalneo-usa.com
US Customer Service Hotline : +1 840-244-5399
Us CustomerService E-mail:customerservice.festivalneo@gmail.com

ASSEMBLY INSTRUCTIONS

Screw four feet onto the bottom of table.
If necessary,adjust feet to level the table.

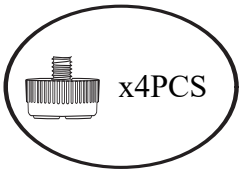

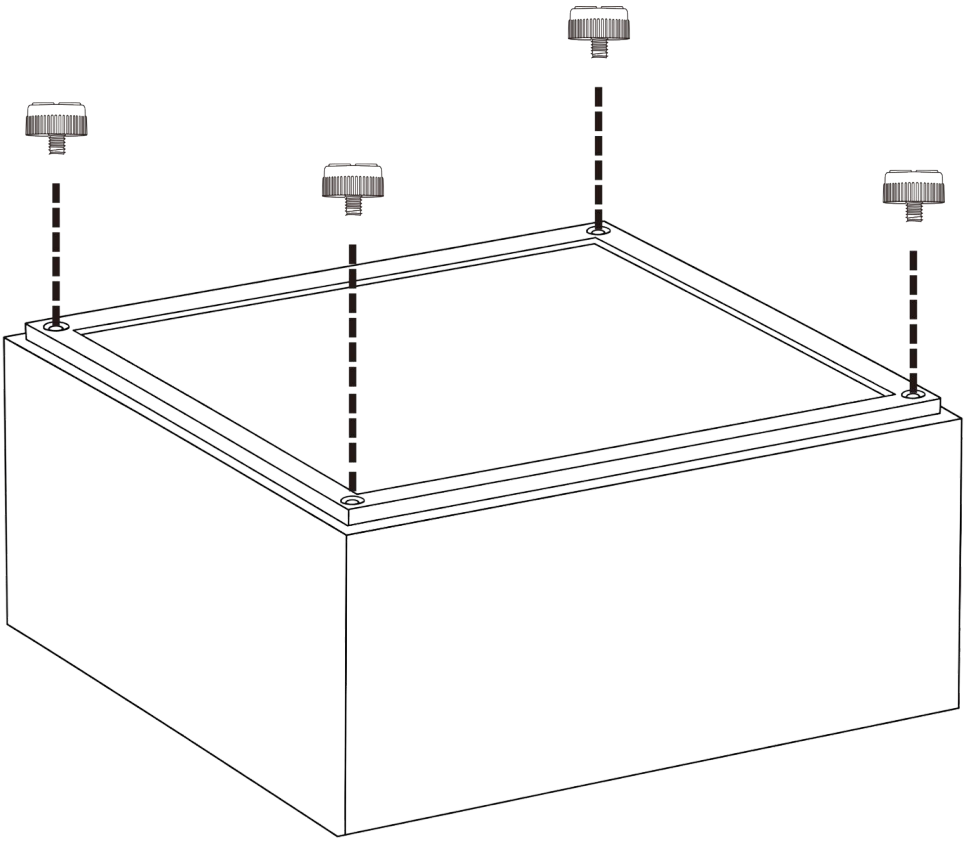

SPARE PART

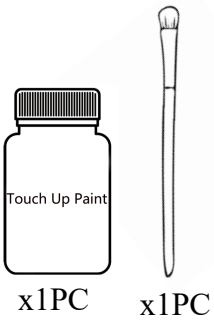

Minor scratches and paint peeling can be repaired using a paint patching kit.

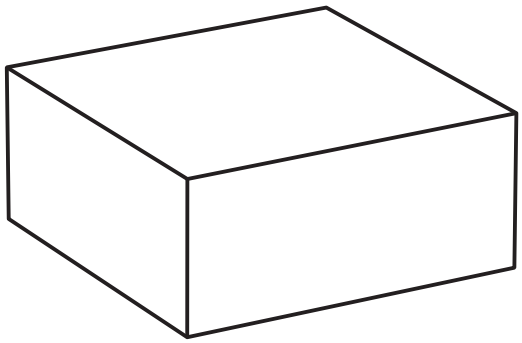

This is not solid wood!

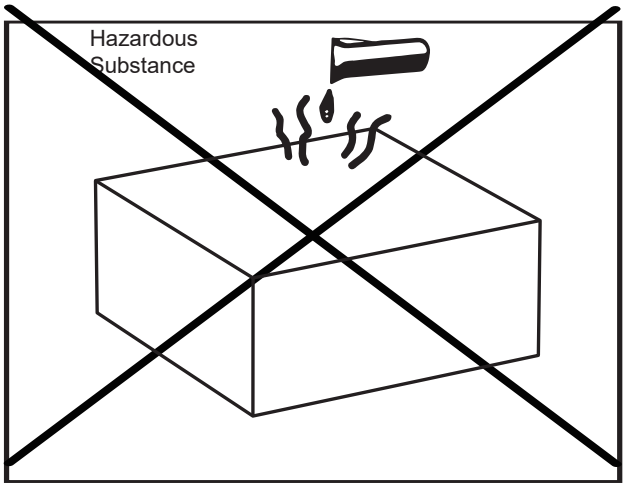

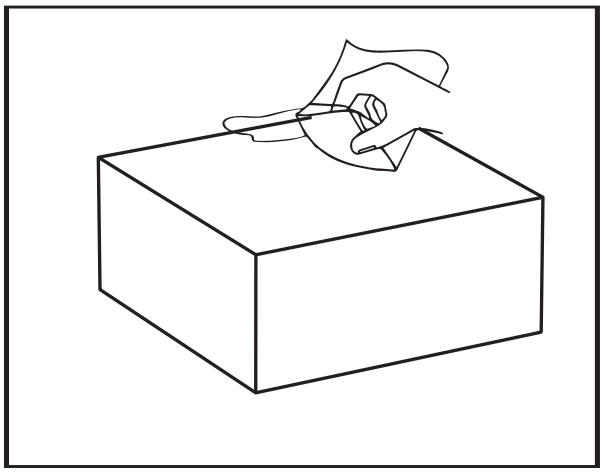

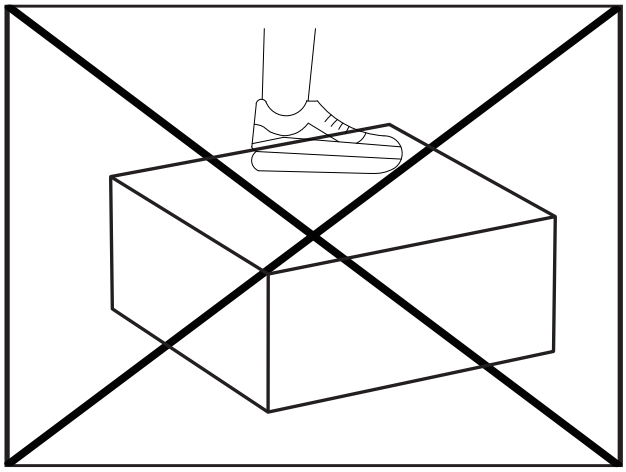

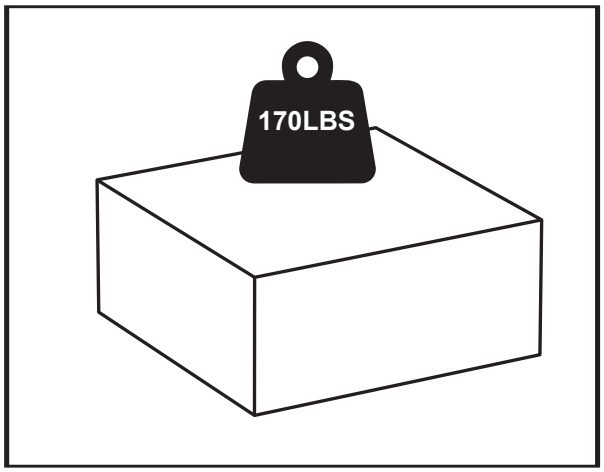

Daily Maintenance Instructions

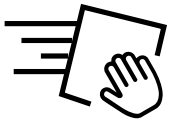

Dust Removal

Please wipe with a damp cloth.

Daily Cleaning

Please clean with neutral detergent.

Scratches Avoided

Please carry the product carefully to avoid contact with sharp or hard objects, which may cause damages or scratches.

Scratch Repair

Please use the touch up paint (if have) to repair slight scratches.

Daily Maintenance Instructions

Hazardous Substance Avoided

Please avoid contact with strong acid or alkali, if spilled accidentally, please rinse with water immediately.

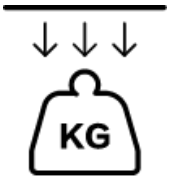

Safety Reminder

Please pay attention to the weight capacity and avoid children jumping on the product.

Warm Reminder

It is recommended to store the product when not in use (over one month), protecting the possible damage from harsh weather. Proper protection can prolong its life span.