TEAR SHEET

Tate 8" Pivoting Monopoint Flush Mount

Item # MF 4210SB

Designer: Marie Flanigan

Height: 8.25"
Width: 2.5"
Canopy: 4.25" Round
Finishes: BZ, PWT, SB
Lightsource: Dedicated LED
Wattage: 8w (1100lm)
Weight: 2 Pounds
Note: 120V Configuration Only



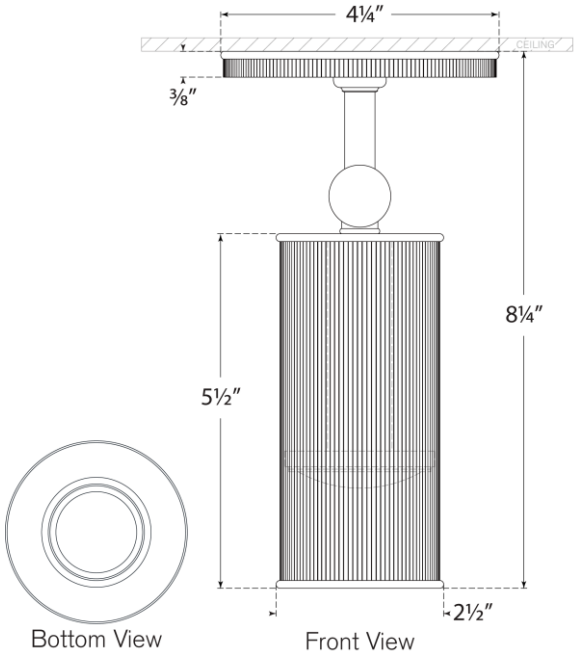

VISUAL COMFORT & CO.

DAMP LED 4