LUXOR

30-Tablet / Chromebook Charging Cart

Chariot de recharge pour 30 tablette / Chromebook

Carrito de carga para 30 tableta / Chromebook

ABC30CHARGEKD



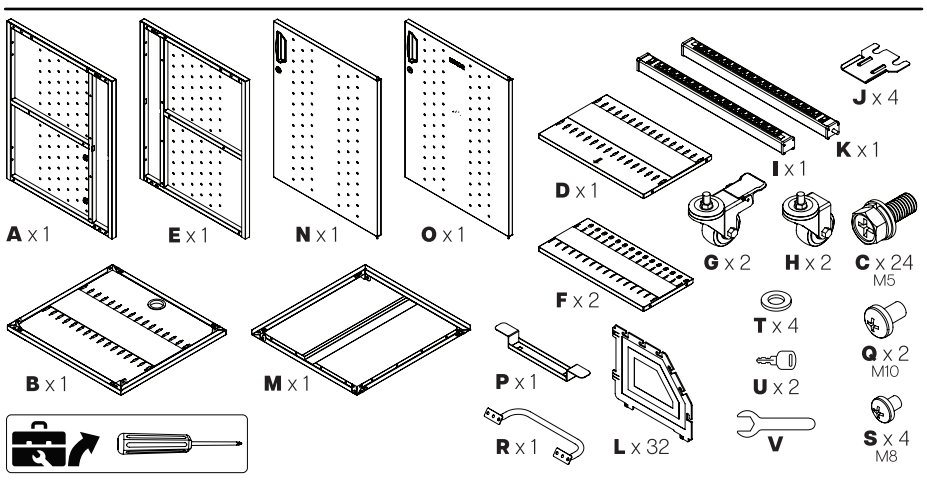

1

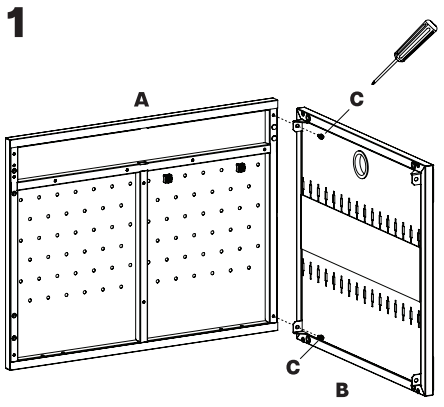

2

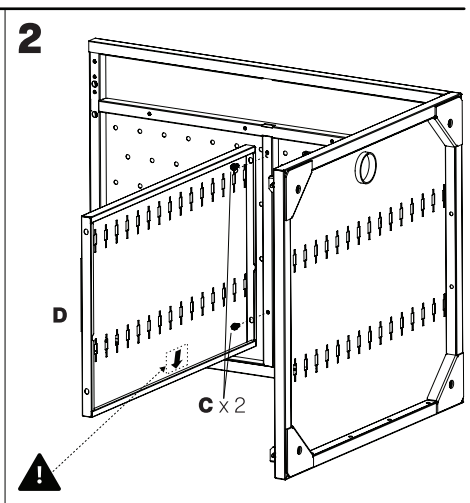

3

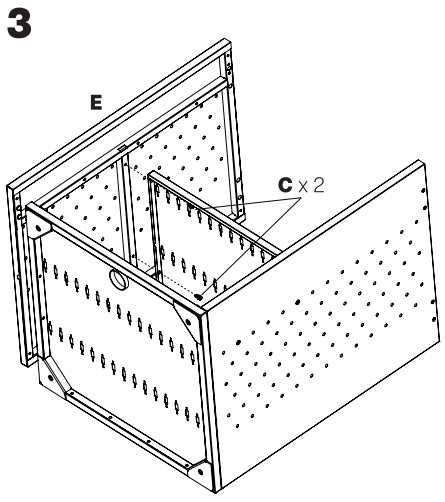

4

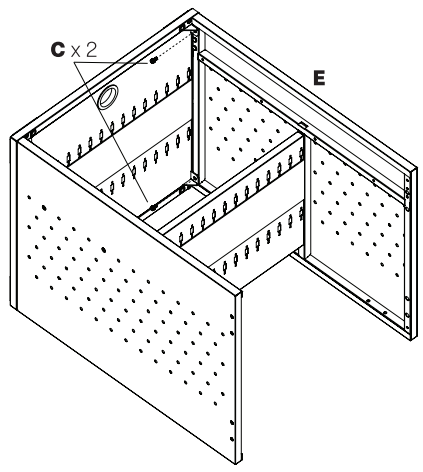

5

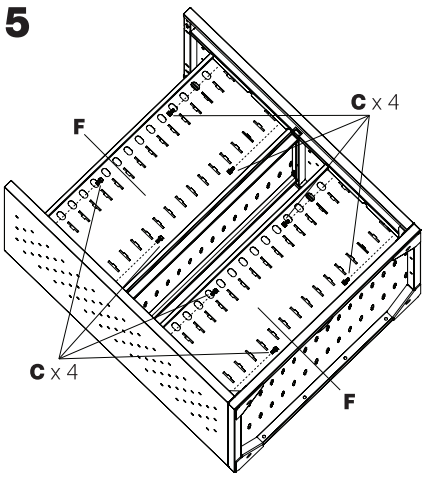

6

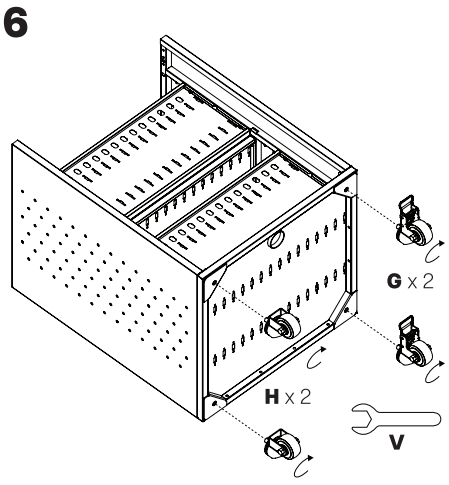

7

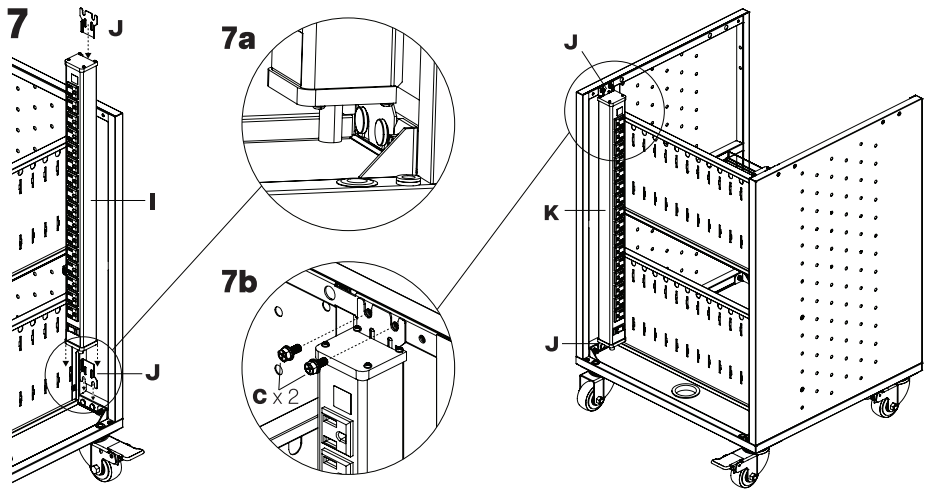

8

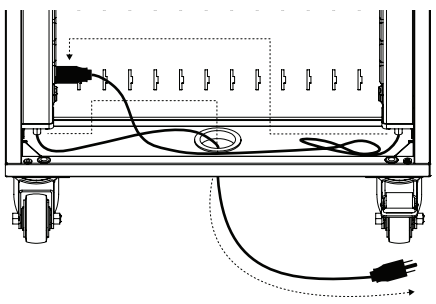

9

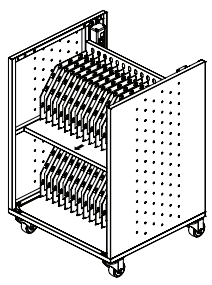

9a

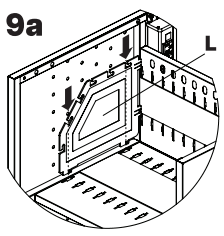

9b

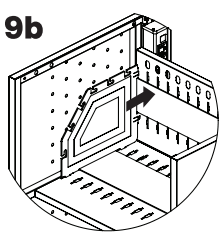

10

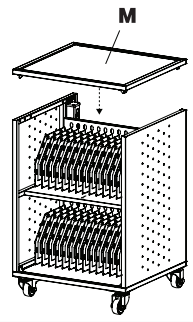

10a

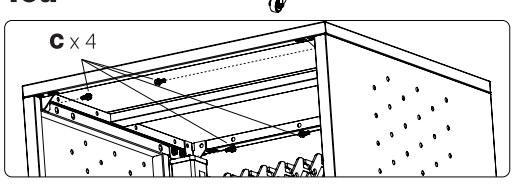

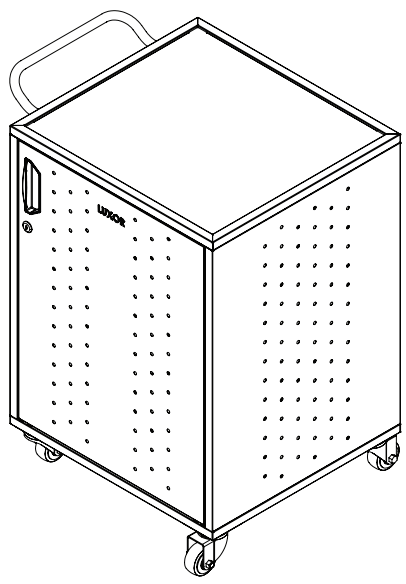

11

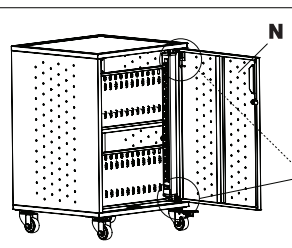

11a/12a

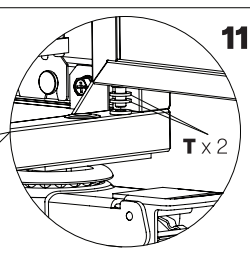

12

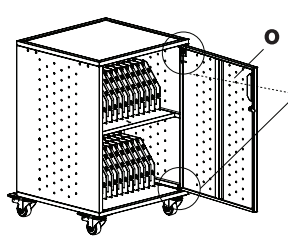

11b/12b

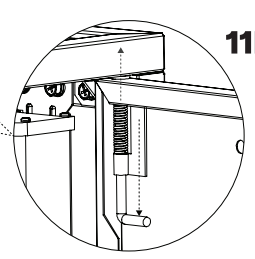

13

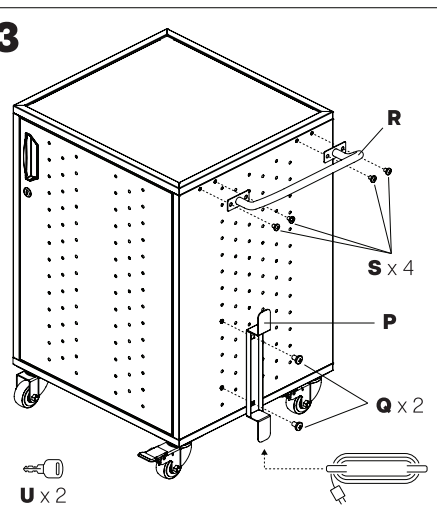

LUXOR
WORKSPACES
2245 N. Delany Road. Waukegan. IL 60087
customerservice@luxorworkspaces.com
(800) 323-4656
INST-PC-4354
Rev A