Assembly Instruction

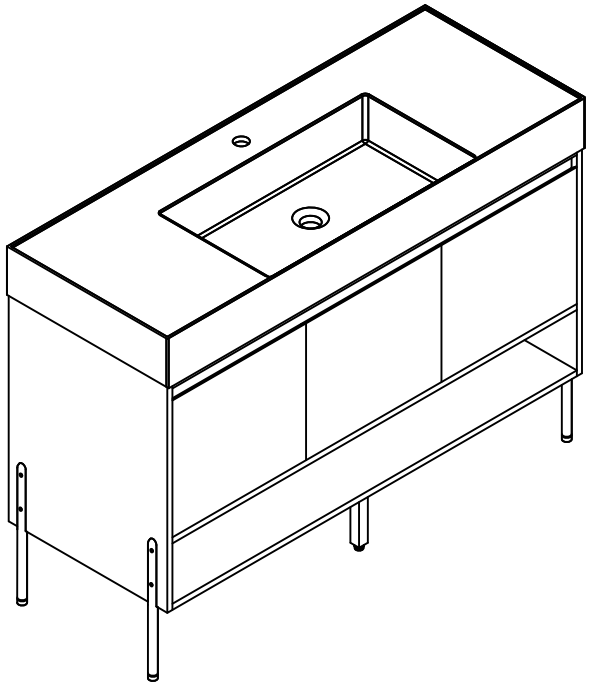

Thank you for shopping with us!

We encourage you to take a few minutes to go through this booklet. It contains important information on installation and care tips to keep your furniture looking as good as new.

Before Installation

Important – Please read these instructions fully before starting assembly

Thank you for purchasing this quality product. Be sure to check all packing materials carefully for small parts, which may have come loose inside the carton during shipment. Identify and count all items according to the PARTS LIST and/or HARDWARE LIST shown below. Check you have all the components and tools listed on the following pages.

•We recommend that you assemble this product with the assistance of another person; this will make the assembly easier, and will help eliminate damage to the product or injury to persons during assembly.

•Please do not over tighten screws or bolts until the assembly is completed.

•Keep children and animal away from the work area, small parts could choke if swallowed.

•Please put all parts on a non-abrasive floor before assembly,and follow the assembly steps to assemble your newly purchased product correctly and efficently.

Cam Lock Assembly Instructions

Diagram A

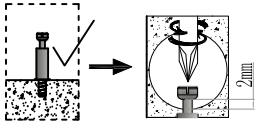

Insert Cam Bolt into hole as shown in diagram A.

Diagram B

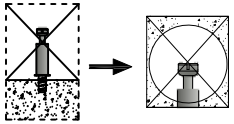

Also avoid inserting the Cam Bolt too close to the surface of the hole as shown in figure B, as this will cause the Cam Lock to be too loose, and not interlock properly.

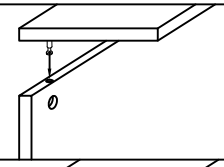

Connect the panels together.

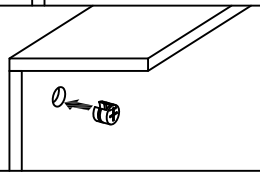

Attention:Cam lock arrow point to the steel rod.

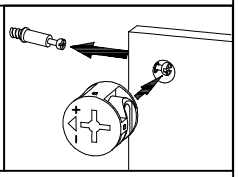

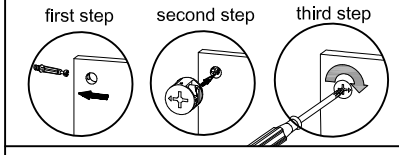

To tighten the Cam Lock, turn it clockwise on half a turn with a flat screwdriver.
Do not use an automatic screwdriver as it may bend or break if too much power is imposed.

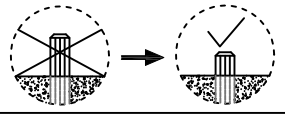

Installation of wooden tenons as shown in the diagram.

Dimensions

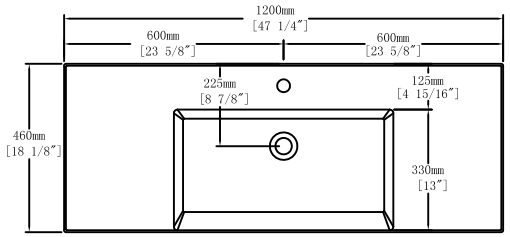

Top View

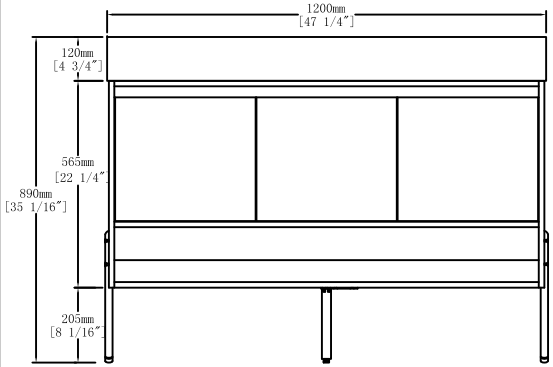

Front View

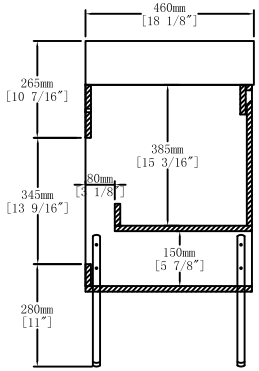

Side View

Hardware

NO.	Draw	QTY
A	Screws Ø4x14mm	56
B	Two-in-one connector	35
C	Two-in-one connector	35
D	Wood plug	11
E	Plastic anchor(Ø10mm)	2
F	Screws for fix on the wall	2
G	Bracket (53x70x44mm)	2
H	Bracket (19x19x35mm)	2
I	Metal Feet	4

NO.	Draw	QTY
J	Screws M4x16mm	8
K	Middle metal foot M4x12mm	1
L	Hinges (Internal hiding)	4
M	Hinges (Half cover)	2
N	Screws Ø4x25mm	1
O	Door stopper	2
P	Anti-collision gasket	4
Q	Screwdriver	1

Components

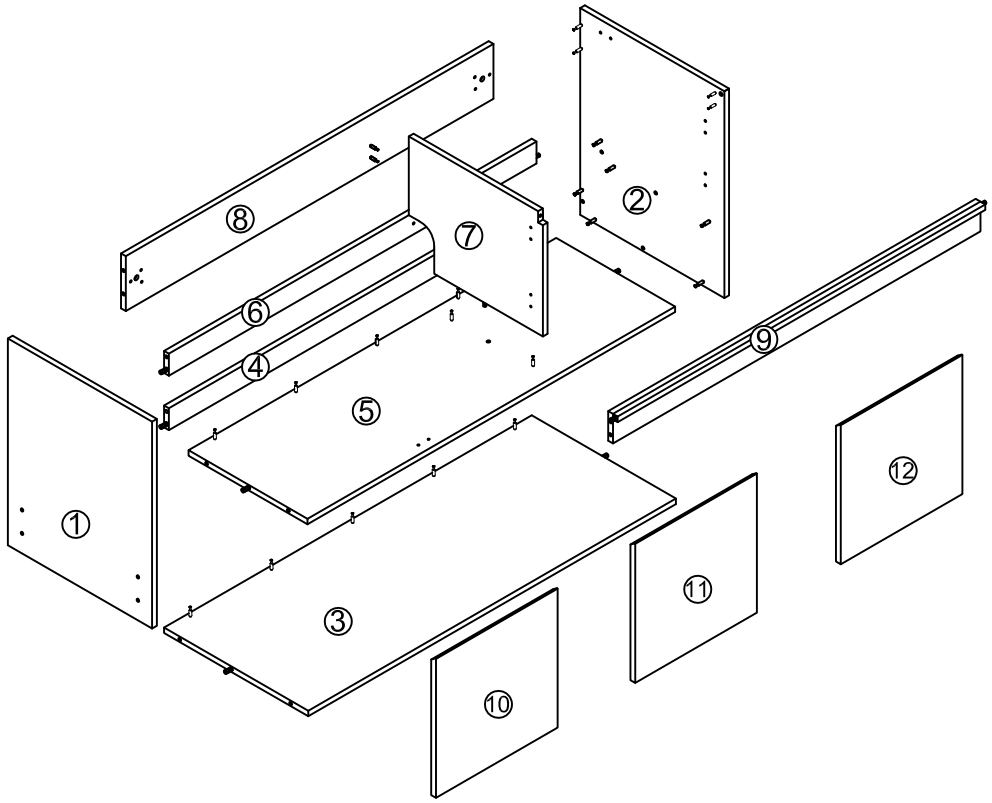

Recommended tools You Will Need-Outils Require

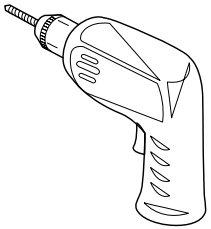

Power drill

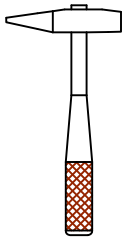

Hammer



Silicone

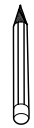

Pencil



Screwdriver

Step 1

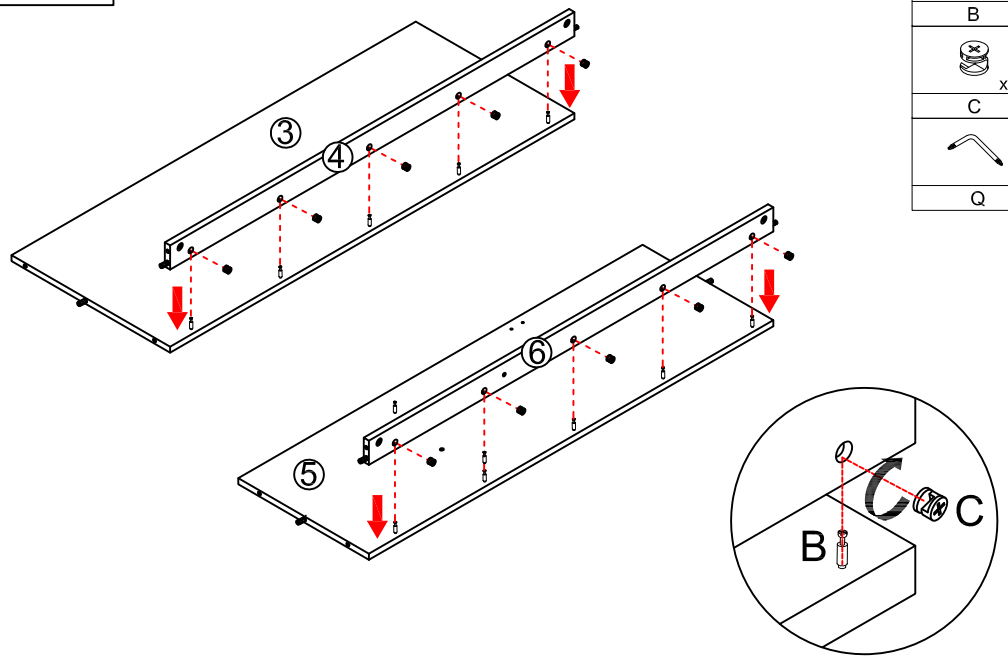

x10
B
x10
C
Q

Step 3

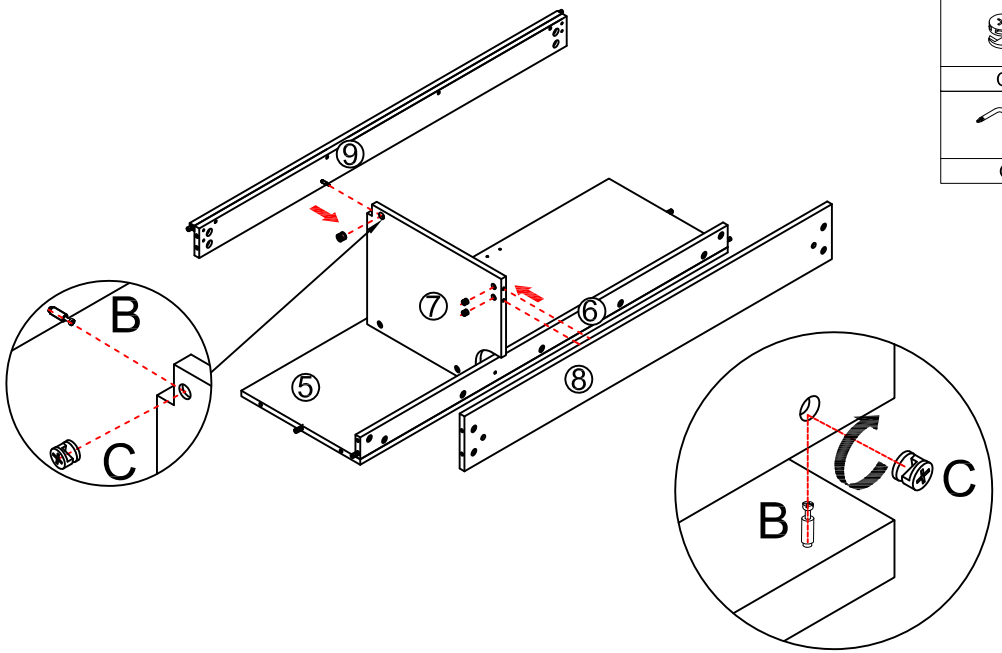

x3
B
x3
C
Q

Step 2

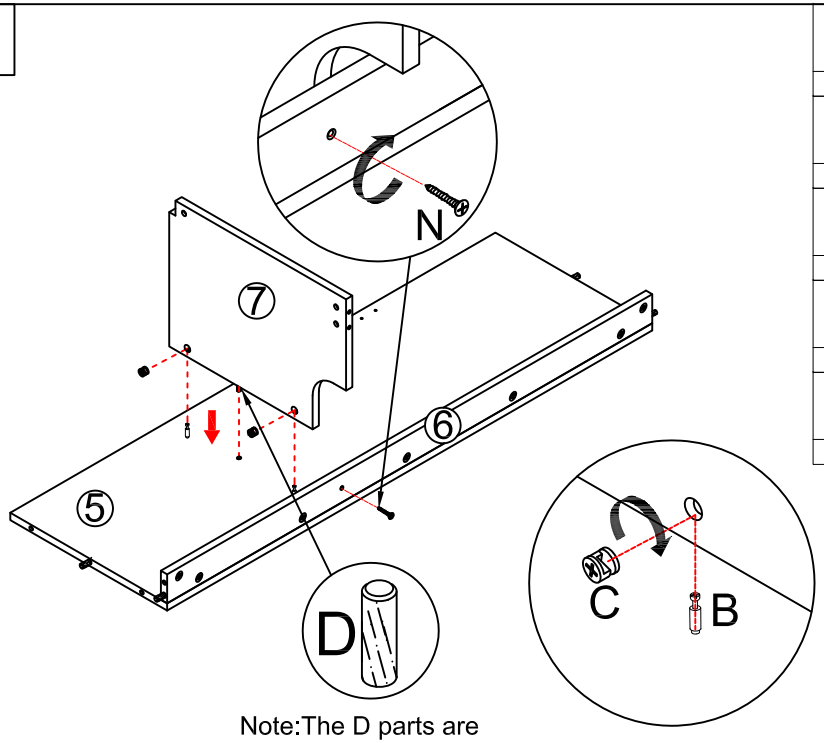

Note:The D parts are
used for this hole

x2
B
x2
C
x1
D
(∅4 x 25mm)
x1
N
Q

Step 4

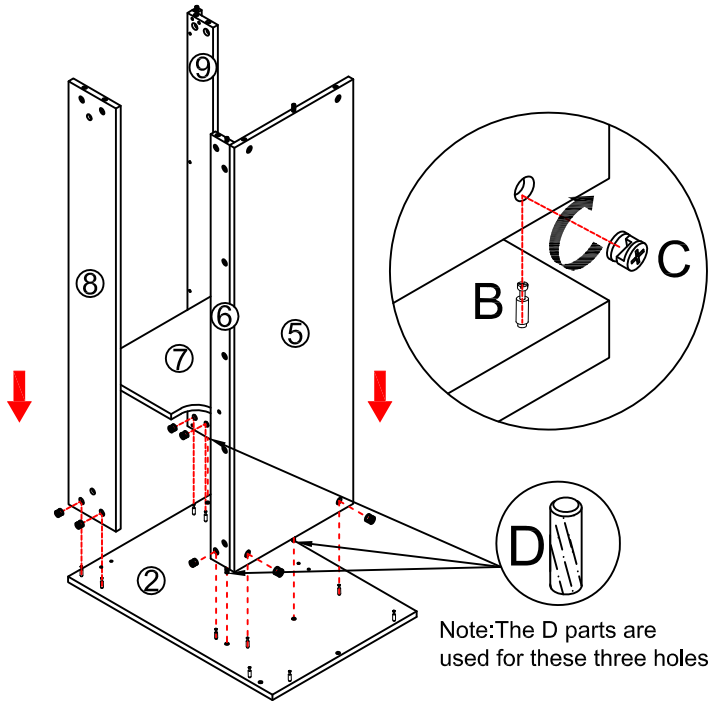

Note:The D parts are
used for these three holes

x7
B
x7
C
x3
D
Q

Step 5

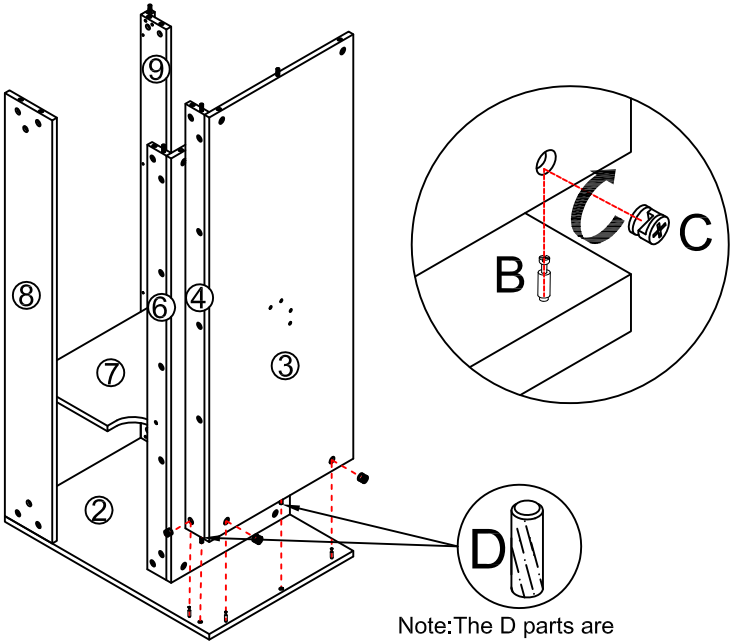

Note:The D parts are
used for these two holes

x3
B
x3
C
x2
D
Q

Step 6

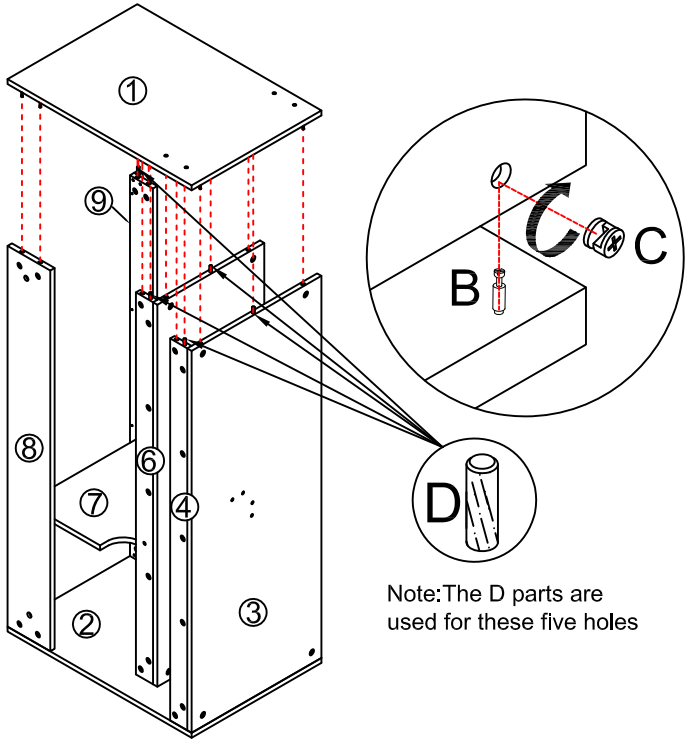

Note:The D parts are
used for these five holes

x10
B
x10
C
x5
D
Q

Step 7

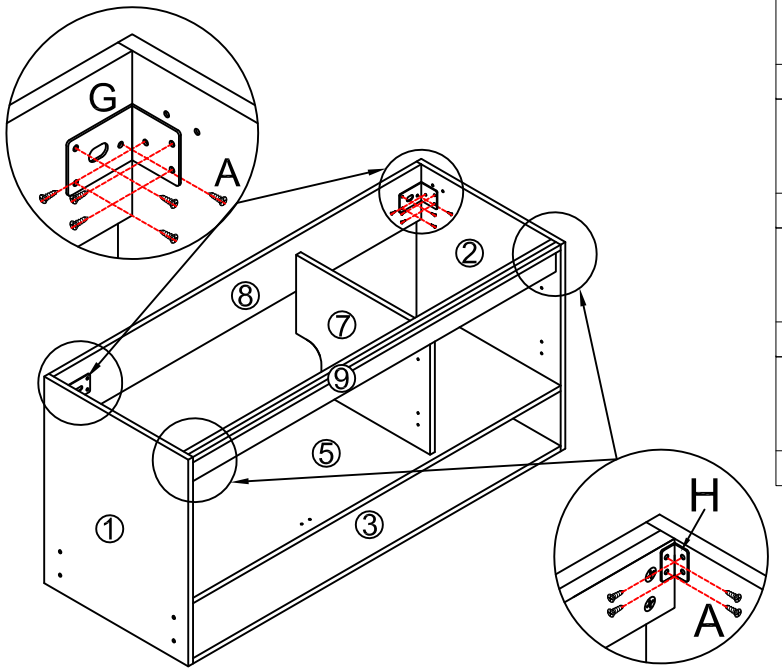

x2
G
(∅4 x 14mm)
x20
A
x2
H
Tool

Step 8

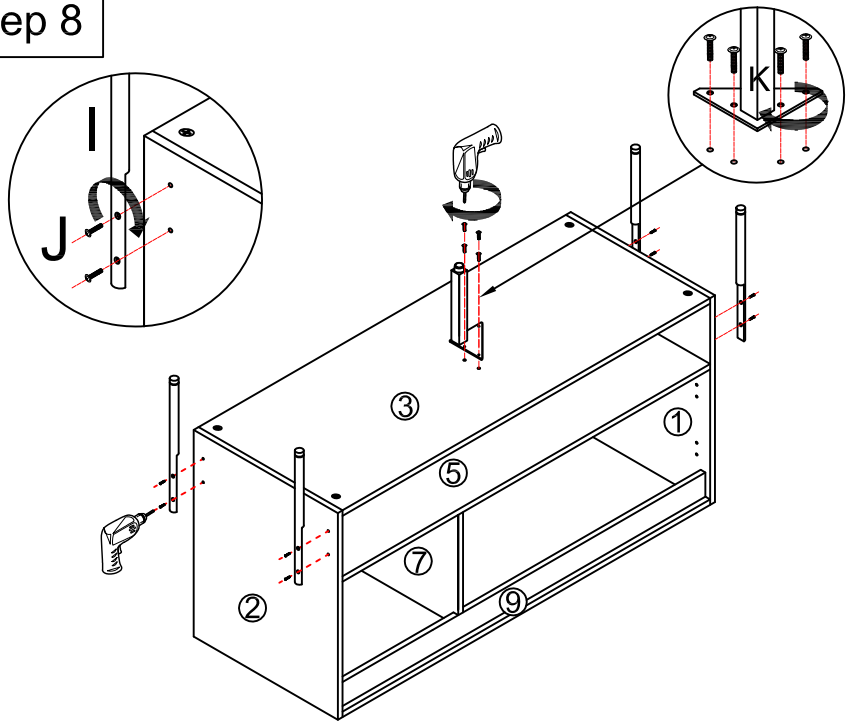

x4
I
(M4*16mm)
x8
J
x1
K
Tool

Step 9

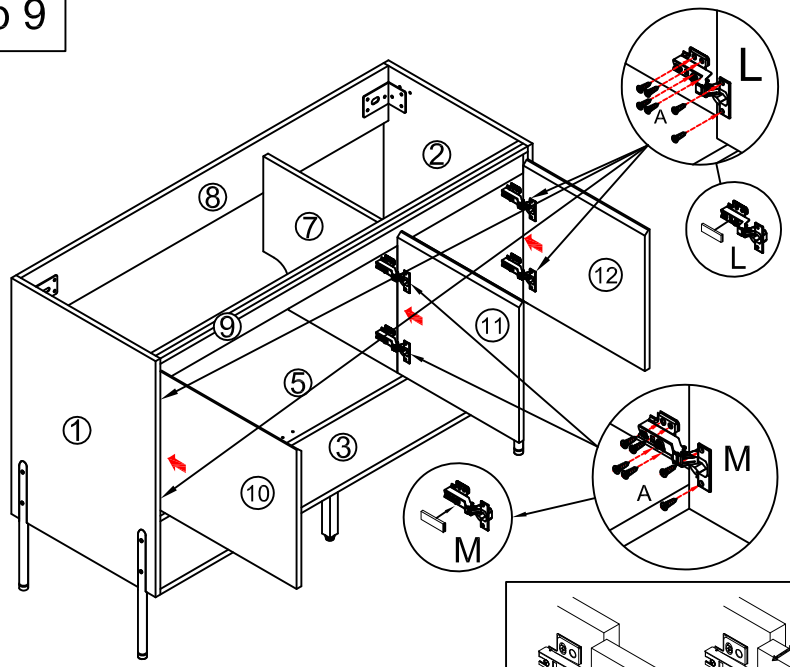

x4
L
x2
M
(∅4 x 14mm)
x36
A
Tool

You can adjust the doors by tightening or loosening the screws on the hinge.

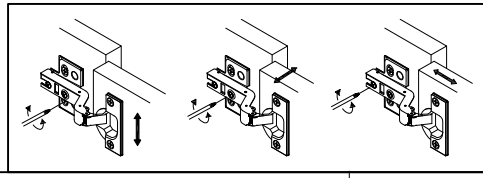

Step 11

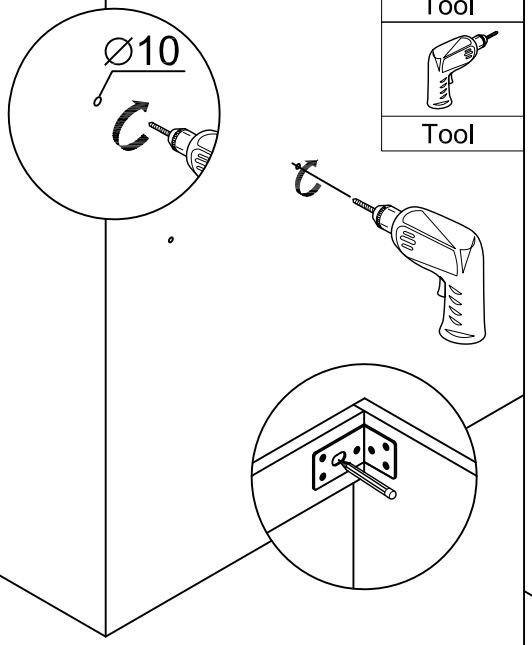

Tool
Tool

Step 12

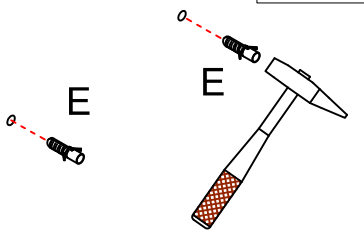

x2
E
Tool

Step 10

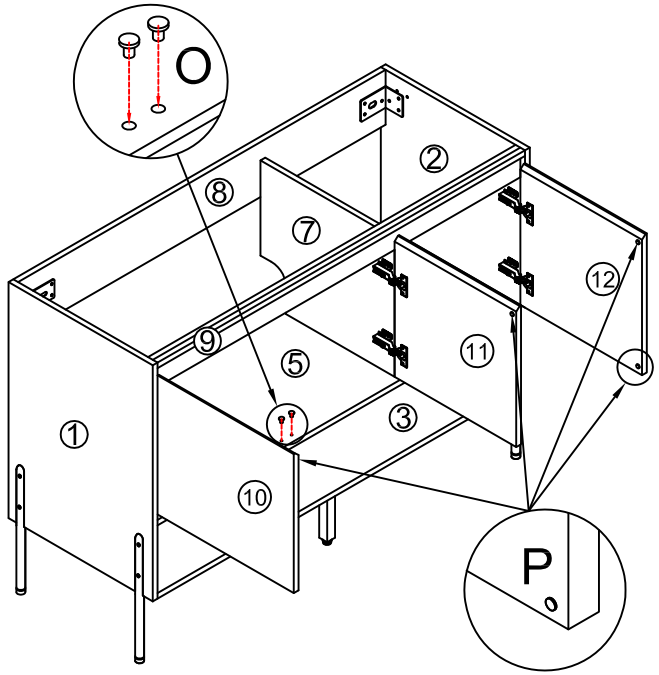

x2
O
x4
P

Step 13

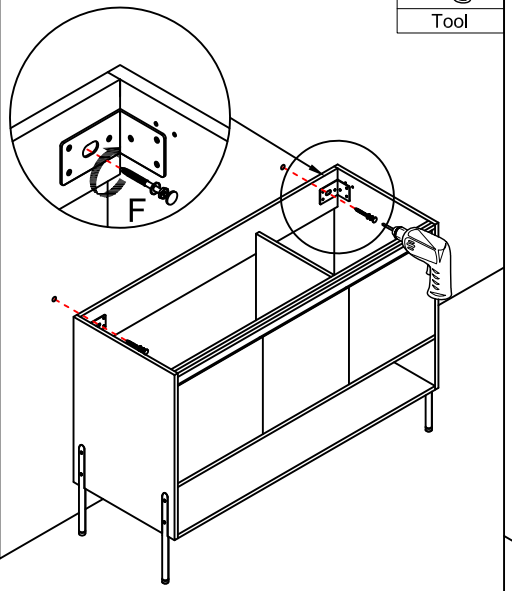

x2
F
Tool

Finished

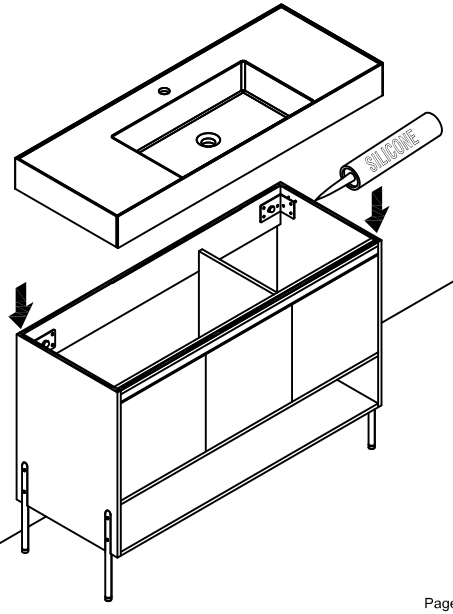

HINGE ADJUSTMENTS

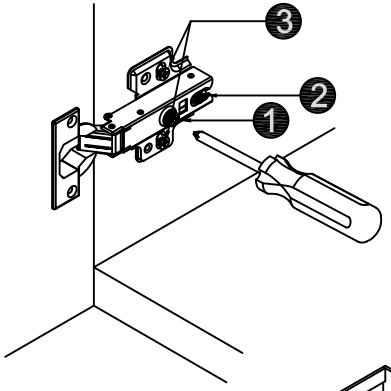

1 Coverage Distance

Rotate screw to the right:Coverage distance decrease (-)
Rotate screw to the left:Coverage distance decrease (+)

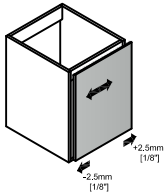

2 Depth Distance

Rotate screw to the right:Coverage distance decrease (-)
Rotate screw to the left:Coverage distance decrease (+)

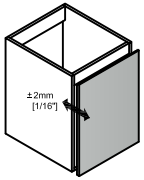

3 Height Distance

Release the base screw, adjust the height of the door, and then tighten the screw.

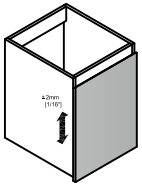

CARE CLEANING AND MAINTENANCE

1.Dust regularly with a soft , dry cloth.
2.Avoid the use of all chemicals household cleaners, abrasives, or cleaners that contain lemon, vinegar, or other acids that may damage the finish.
3.Excessive exposure to sunlight and extreme changes in temperature and moisture can damage wood furniture.
4.The sink top is resilient, but care needs to be taken to preserve its appearance.
5.Do not place hot appliances, such as curling irons and hot hair dryers directly on the countertop. Wipe spills immediately.

THANKS FOR WATCHING

Your feedback is invaluable to us and we would love to hear about your experience. Please take the time to leave us a review.