USER MANUAL

TURBRO

SPLIT AIR CONDITIONER

Model:

GL9K115	GL9K230
GL12K115	GL12K230
GL18K230	GL24K230

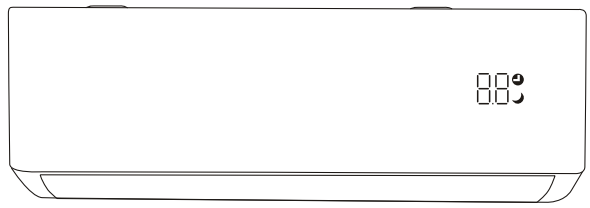

Before using or installing your TURBRO Split Air Conditioner, please read this manual carefully and retain it for future reference.

Tips for First-Time Use

1. Allow the unit to sit upright for at least 3-4 hours before powering on. Shipping carriers may set the unit on its side, which causes the refrigerant to pool in certain areas. Standing the unit upright for 3-4 hours allows the refrigerant to move freely within the coils.
2. Some parts with sharp edges may cause injury, so gloves are highly recommended for unpacking and installing.
3. If you have any difficulties during installation, please contact our Customer Support Team via support@turbro.com for help.
4. If you have any problems with your product, please send us an email before submitting a return request, as there might be a simple solution for your issue.

Please read this user manual carefully before installing and operating the unit.

⚠ WARNING

1. Do not use means to accelerate the defrosting process or to clean, other than those recommended by the manufacturer. Should repair be necessary contact the TURBRO Customer Service Team.
2. Any repairs carried out by unqualified personnel may be dangerous.
3. Do not pierce or burn refrigerant lines or any other components.
4. Read the user manual in its entirety before beginning installation or operation.

CONTENTS

SAFETY INFORMATION 01
PARTS DESCRIPTION 03
INSTALLATION INSTRUCTIONS 06
Indoor Unit Installation 07
Outdoor Unit Installation 13
Inspection before Use 21
OPERATING INSTRUCTIONS 21
Operating from the App 21
Operating from the Remote Control 25
CLEANING 32
Warning 32
Cleaning the Outer Case 32
Cleaning the Filter 32
Maintenance Checklists 33
MALFUNCTION CODES 34
TROUBLESHOOTING 34
WARRANTY & CUSTOMER SUPPORT 36
Warranty Information 36
Customer Support 36

SAFETY INFORMATION

Please read all instructions before use and save this user manual for future reference. A digital version can be obtained from Customer Support.

Your safety and the safety of others are very important to us. We have provided many important safety messages throughout this manual and on the appliance itself. Always read and follow all posted safety messages.

To reduce the risk of fire, electric shock, injury, or death to persons using or near this appliance, please follow some basic safety precautions. These precautions include, but are not limited to, the following:

Installation and Setup

- This appliance is not intended for use by any persons (including children) with reduced or restricted physical, mental, or sensory capabilities, or lack of experience and knowledge, unless under the direct supervision of a person responsible for their safety.
- Please keep plastic bags and sheets out of the reach of children as they might be mistakenly used for play. Packaging materials can become airtight chambers and may pose a risk of suffocation if not disposed of properly.
- Before use, check whether the product is visibly damaged, malfunctioning, disassembled or has missing or broken parts. If that, consult a professional or TURBRO customer service team to make sure the unit can operate normally. Use only authorized TURBRO factory OEM parts.
- Keep the product away from fire. Do not store or use flammable gases or materials near the appliance.
- Do not use heating equipment near the appliance.
- In the event of a gas leak (propane gas, LP gas, etc.) do not operate this or any other appliance. Open a window or door to ventilate the area immediately.

Electrical Safety Warning

- Protect the indoor unit with a fuse of suitable capacity for the maximum input current or with another overload protection device.
- This product should be connected plugged to a power supply with properly rated, protected, and sized in order to avoid electrical overload.
- Your air conditioner must be used in a properly grounded wall receptacle. If the wall receptacle you intend to use is not adequately grounded or not protected by a time-delay fuse or circuit breaker, have a qualified electrician install the proper wall power receptacle before using this appliance.

- During the installation or moving of the appliance, be careful not to pinch, crush, or damage the wires. Always disconnect the unit from the power supply before cleaning or maintenance operations.
- The batteries in the remote controller must be recycled or disposed of properly. For disposal of scrap batteries, please discard the batteries as sorted municipal waste at the accessible collection point.
- Do not obstruct the air inlet or outlet of the indoor or outdoor unit. The obstructions cause a reduction in the operative efficiency of the conditioner with possible consequent failures or damages.
- Do not climb onto or place any objects on the outdoor unit.

FCC Caution

This device complies with part 15 of the FCC Rules. Operation is subject to the following two conditions: (1) This device may not cause harmful interference, and (2) this device must accept any interference received, including interference that may cause undesired operation.

Any Changes or modifications not expressly approved by the party responsible for compliance could void the user's authority to operate the equipment.

Note: This equipment has been tested and found to comply with the limits for a Class B digital device, pursuant to part 15 of the FCC Rules. These limits are designed to provide reasonable protection against harmful interference in a residential installation. This equipment generates uses and can radiate radio frequency energy and, if not installed and used in accordance with the instructions, may cause harmful interference to radio communications. However, there is no guarantee that interference will not occur in a particular installation. If this equipment does cause harmful interference to radio or television reception, which can be determined by turning the equipment off and on, the user is encouraged to try to correct the interference by one or more of the following measures:

- Reorient or relocate the receiving antenna.
- Increase the separation between the equipment and receiver.
- Connect the equipment into an outlet on a circuit different from that to which the receiver is connected.
- Consult the dealer or an experienced radio/TV technician for help.

The distance between user and device should be no less than 20cm.

PARTS DESCRIPTION

Indoor Unit

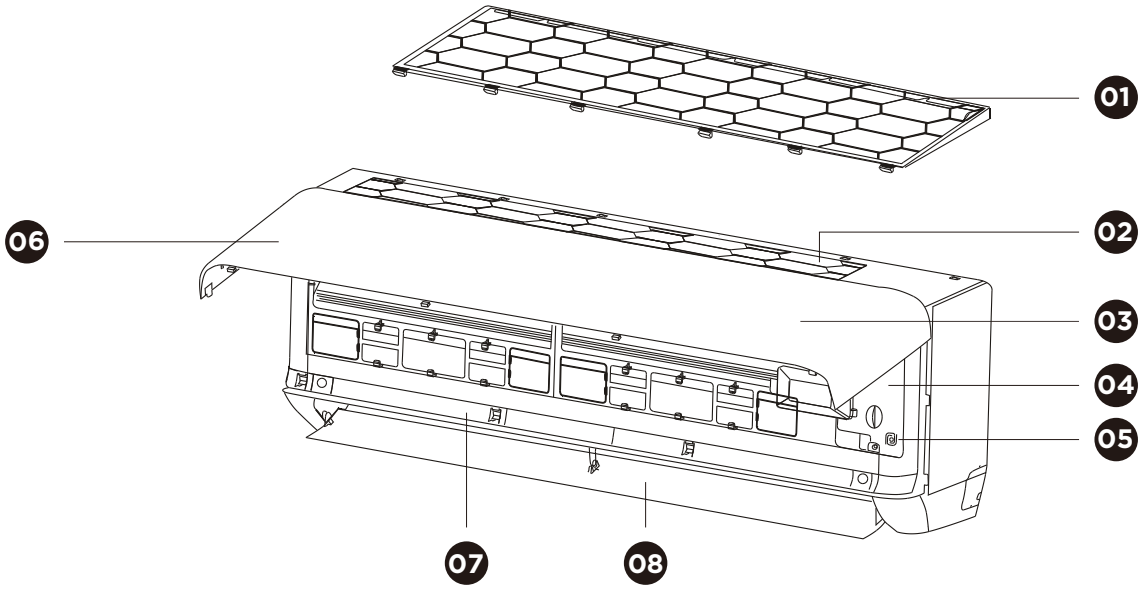

01 **Air Filter**
02 **Air Inlet**
03 **USB Module (Inside)**
04 **Electric Control Box**
05 **Manual Button**
06 **Front Panel**
07 **Air Outlet**
08 **Deflector**

NOTE: When the remote controller fails, press the Manual Button with insulation material.

Current status	Operation	Respond
Standby	Press the manual button once	It beeps briefly once and enters cool mode.
Standby	Press the manual button twice in 3 seconds	It beeps briefly twice and enters heat mode.
Running	Press the manual button once	It keeps beeping for a while and turn off.

Display

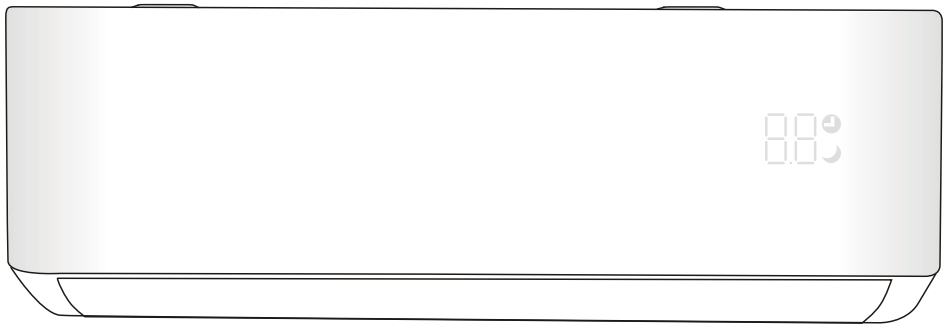

01	8.8	Indicator for Timer, Temperature, and Error codes.
02		Indicator for Timer Function.
03		Indicator for Sleep Mode.

Outdoor Unit

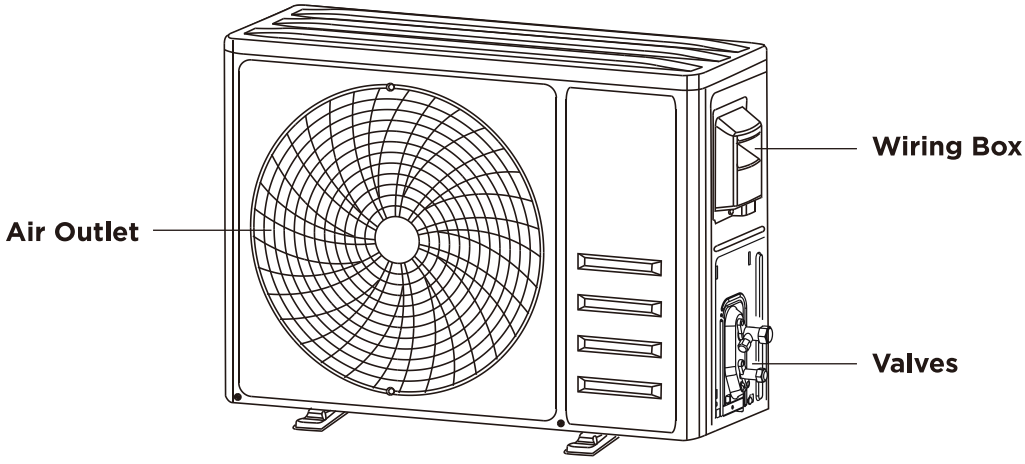

PARTS	PARTS NAME	QUANTITY
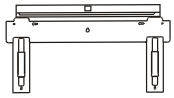	Mounting plate	1
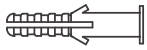	Wall anchors	1 set
	Screws	1 set
	Screws for remote control holder	1 set
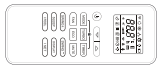	Remote control	1
	AAA battery	2
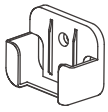	Remote control holder	1
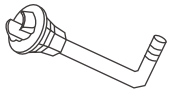	Drain joint	1
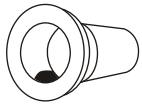	Wall sleeve	1 set
	Refrigerant pipe (5m)	2
	Signal cable	1

PARTS	PARTS NAME	QUANTITY
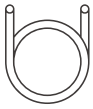	Drain hose	2
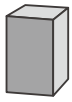	Sealing gum	1
	Insulation tape	1
	Rubber feet for outdoor unit	4
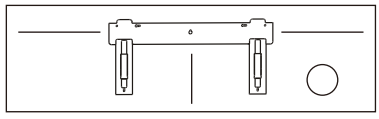	Guide plate	1

INSTALLATION INSTRUCTIONS

Tools Prepared for Installation (Not Included)		
Bubble Leve	Measuring tape	Screwdriver
Pencil	Drill with Hole Saw	Electric Drill
Scissors	Electroprobe	Universal Meter

Tools Prepared for Installation (Not Included)		
Torque Wrench	Open-end Wrench	Hexagonal Wrench
Manifold Gauge	Vacuum Pump	Pliers (not necessary)
Electronic Leakage Detector		

Indoor Unit Installation

Before installing the indoor unit, you need to check the label on the product box and make sure that the model number of the indoor unit matches the model number of the outdoor unit.

Step 1: Select the Installation Location

Make sure the installation complies with the following diagrams.

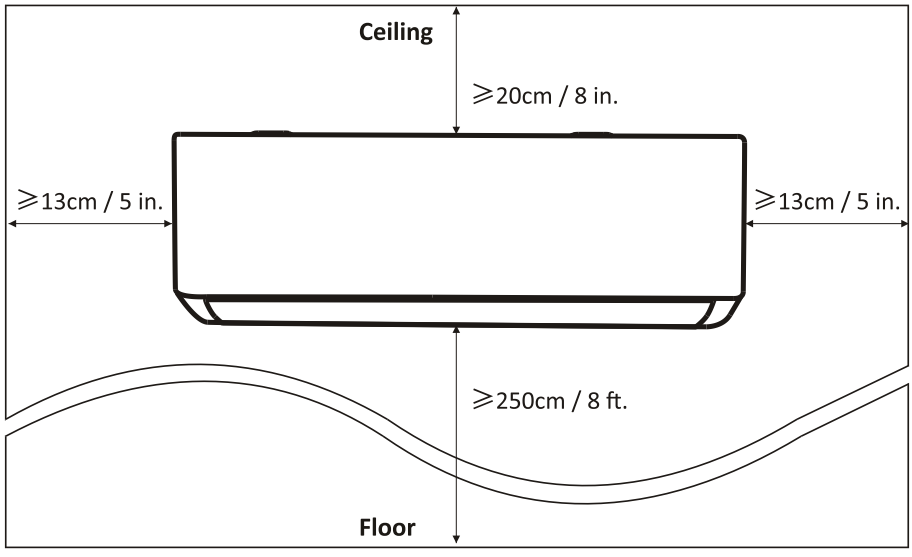

Check the location meets the following requirements:

- Air inlet and outlet must be clear of obstructions, ensuring proper airflow throughout the room.

- Condensate can be easily and safely drained.
- All connections can be easily made to the outdoor unit.
- A mounting wall strong enough to withstand four times the full weight and vibration of the unit.
- Filter can be easily accessed for cleaning.
- Leave enough free space to allow access for routine maintenance.
- Install at least 10 ft. (3 m) away from the antenna of a TV set or radio. Operation of the air conditioner may interfere with radio or TV reception in areas where reception is weak.
- Do not install in a laundry room or by a swimming pool due to the corrosive environment.

Step 2: Install Mounting Plate

- Take the mounting plate from the back of the indoor unit.
- Ensure you can meet the minimum installation dimension requirements as step 1. According to the size of the mounting plate, determine the position and stick the mounting plate close to the wall.
- Adjust the mounting plate to a horizontal state with a bubble level, then mark out the screw hole positions on the wall.
- Set the mounting plate down and drill holes in the marked positions with a drill.
- Insert included wall anchors into the holes, then hang the mounting plate and fix it with screws.

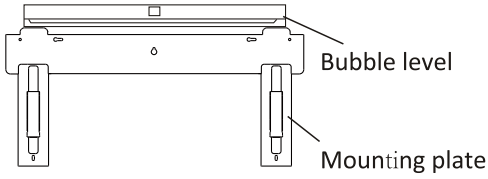

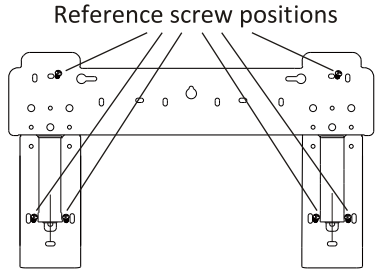

NOTE: Make sure the mounting plate is firm enough and flat against the wall after installation.

Step 3: Drill Wall Hole

- Determine the location of the wall hole base on the position of the mounting plate.
- The hole should have a 2.7inch (70mm) diameter at least and a small oblique angle to facilitate drainage to the outdoors.
- Drill the wall hole with a 2.7inch (70mm) core drill and with a small oblique angle lower than the indoor end about 5-10mm.
- Place the wall sleeve in the hole to protect the connection parts.

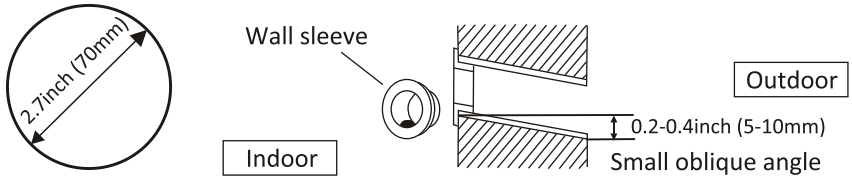

Caution: When drilling the wall hole, make sure to avoid wires, plumbing, and other sensitive components already in your home.

Step 4: Connecting Refrigerant Pipe

- According to the wall hole position, select the appropriate piping mode. There are 3 optional piping modes for indoor units as shown in the figure below:
- In Piping Mode 1 or Piping Mode 3, a notch should be made by using scissors to cut the plastic sheet of piping outlet on the corresponding side of the indoor unit.

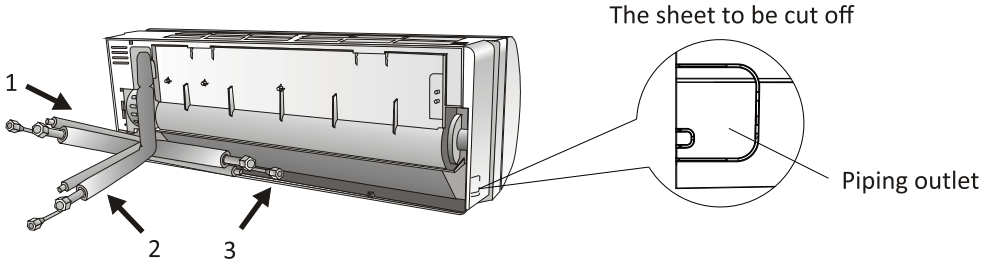

NOTE: When cutting off the plastic sheet at the outlet, the cut should be trimmed to smooth.

- Take off the plastic cover in the pipe ports and take off the protective cover on the end of the piping connectors.
- Check whether there is any debris on the port of the refrigerant pipe and make ensure the port is clean.
- Bend the refrigerant pipes with the port facing up as shown in the figure below.

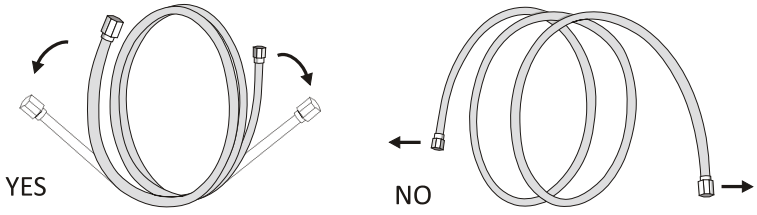

- There is a small amount of refrigerant in the pipe for testing before it leaves the factory. When unscrewing the screw cap of the refrigerant pipe, there will be a sound to indicate the refrigerant has not leaked during transportation. If there is no sound, the pipe may be broken, please check for leaks or contact the customer support team.
- After aligning the refrigerant pipes, rotate the nut of the refrigerant pipe and tighten it as tightly as possible by hand. Please pay attention that over-tightening may damage connections and cause leaks.
- Use a proper torque wrench to tighten it according to the Torque Table below.
- Wrap the joint with the insulation pipe.

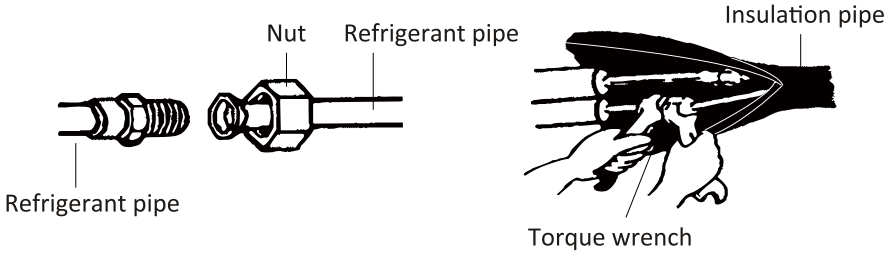

PIPE SIZE	TIGHTENING TORQUE		
Inch (mm)	Newton meter	Pound-force foot	Kilogram-force meter
1/4 (6.35)	18 - 20	13.3 - 14.7	1.9 - 2.0
3/8 (9.52)	30 - 35	22.2 - 25.8	3.1 - 3.5
1/2 (12.00)	45 - 50	33.2 - 36.8	4.6 - 5.1
5/8 (15.88)	60 - 65	44.3 - 47.9	6.2 - 6.6

Step 5: Connect Drainage Hose

- In some models, both sides of the indoor unit are provided with drainage ports so you can choose one of them to attach the drainage hose. Plug the unused drain port with the rubber attached to one of the ports.

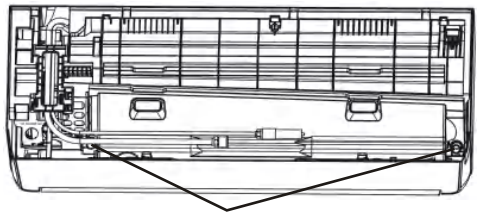

- Connect the drainage hose to the drainage port, and ensure the joint is firm and fully sealed. Wrap the joint firmly with insulation tape to avoid any leaks.

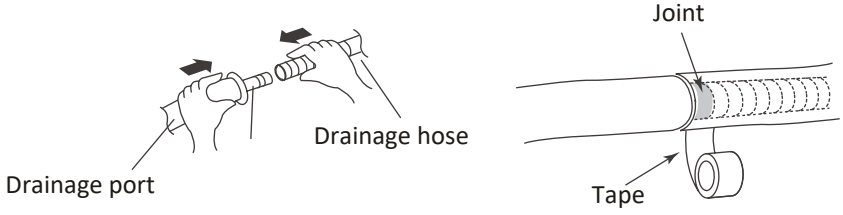

NOTE: Make sure there are no twists or dents, and the pipes should be placed obliquely downward to avoid blockage.

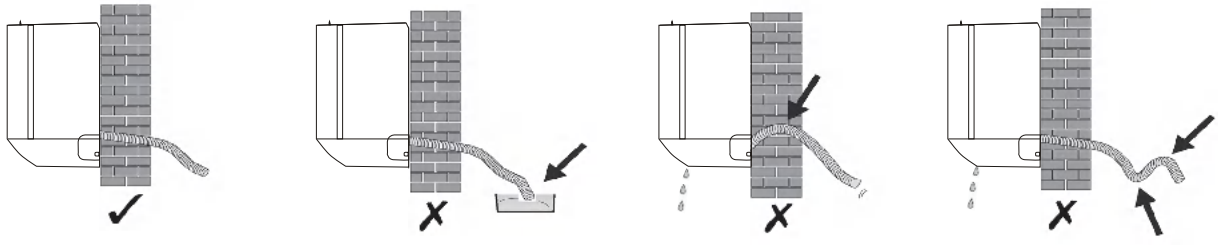

Pitch downwards | Do not put drain hose end into the water | Do not rise | Do not make a trap

Step 6: Connect Signal Cable

- Choose the correct cable size determined by the maximum operating current on the rating label and table below.
- Open the front panel of the indoor unit. Use a screwdriver to open the electric control box cover and reveal the terminal block.
- Unscrew the cable clamp. Choose the signal cable with 4 colored wires, and insert one end of the cable into the position of the control box from the back of the right end of the indoor unit.

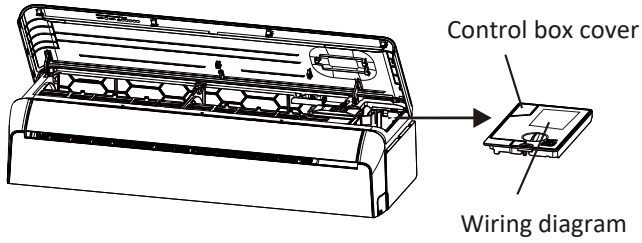

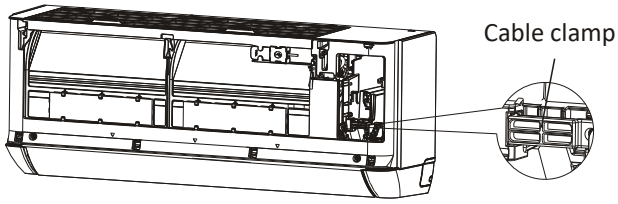

- Connect the cables to the corresponding terminal according to the wiring diagram on the electric control box cover or the picture below. Make sure that they are well-connected.

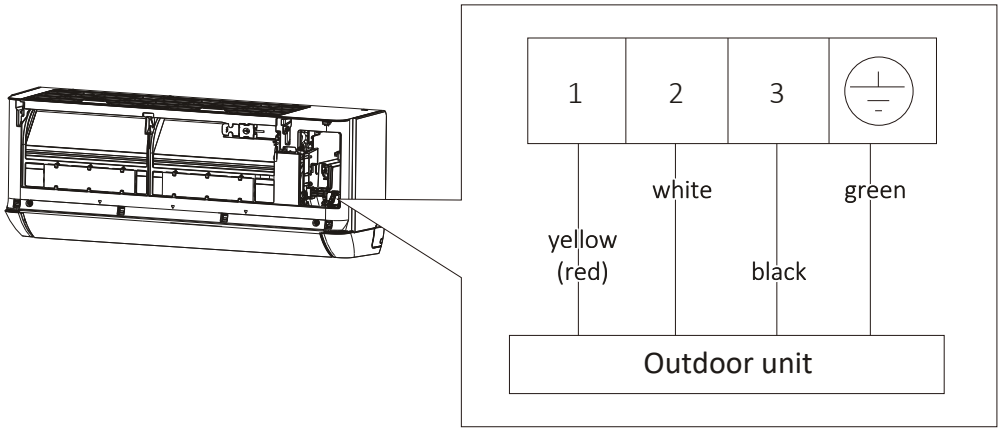

- Screw the cable clamp to fasten the cables and reinstall the electric control box cover and front panel.

Step 7: Wrap Piping and Cable

- Arrange the pipes, cables, and drainage hose as shown in the following picture.
- Use the insulation tape to wrap them together as a bundle tightly.

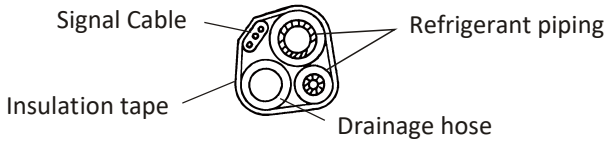

NOTE:

- Make sure the drainage hose is at the bottom and avoid crossing and bending of parts.
- Reserve a few inches of the drainage hose. When wrapping to a certain length, separate the drainage hose. Continue wrapping together and leave a few inches of the signal cable and refrigerant pipes to wrap separately for outdoor unit connection.

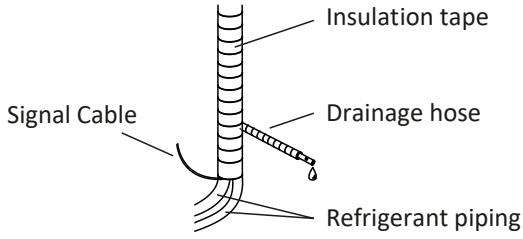

Step 8: Mount Indoor Unit

- Slowly pass the wrapped bundle through the wall hole.
- Hook the top of the indoor unit on the mounting plate. Apply slight pressure to the left and right sides of the indoor unit, making sure the indoor unit is hooked firmly.
- Push down the bottom of the indoor unit and let it snaps onto the hooks of the mounting plate. Make sure it is secured firmly.

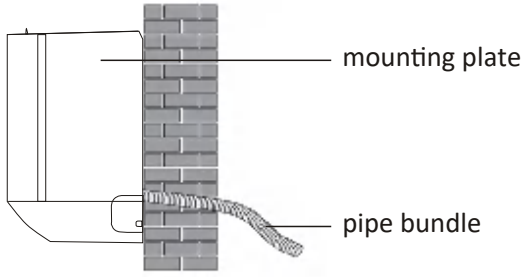

NOTE: The drain hose should slant downwards for drainage. Do not bent or twist.

Outdoor Unit Installation

Step 1: Select Installation Location

Select a site that allows for the following as shown in the image below:

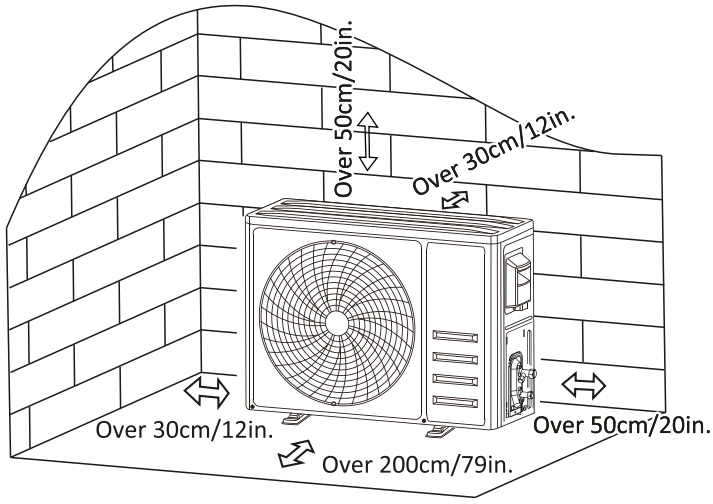

- Reserve the spaces as shown in the picture for the air to circulate.
- Install the outdoor unit in a safe and solid place.
- Do not install the outdoor unit near sources of heat, steam, or flammable gas.
- Do not install the unit in windy or dusty places.
- Do not install the unit where people often pass. Select a place where the air discharge and operating sound will not disturb the neighbors.
- Do not install the unit where it will be exposed to direct sunlight. If that is not an option, you must use protection for the outdoor unit that should not interfere with the airflow).
- If the outdoor unit is subject to vibration, place rubber feet onto the feet of the unit.

Step 2: Install Drainage Hose

- Insert the drainage joint into the hole at the bottom of the outdoor unit.
- Connect the drainage hose to the joint and make the connection secure.

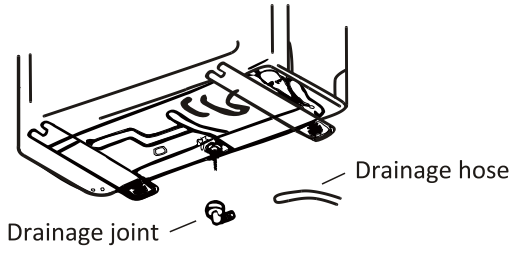

Step 3: Fix Outdoor Unit

- Mark the installation position for expansion bolts. Drill holes and place the bolts.
- Optional step: install 4 rubber feet on the hole before placing the outdoor unit (Optional). This will reduce vibrations and noise.
- Place the outdoor unit base on the bolts and pre-drilled holes.
- Use a wrench to fix the outdoor unit firmly with bolts.

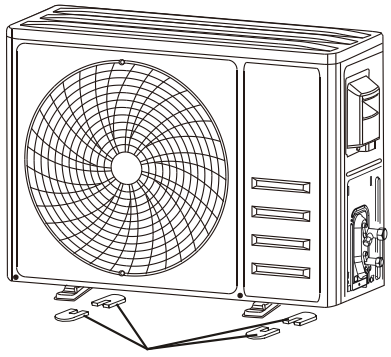

Install 4 rubber feet (optional)

NOTE: The outdoor unit can also be fixed on a wall-mounted bracket. Install the bracket according to the included instructions and then fasten the outdoor unit on it. The wall-mounting bracket must be able to support at least 4 times the weight of the outdoor unit for safe.

Step 4: Connect Cables

- Use a screwdriver to unscrew the wiring cover, then press it down firmly but gently to remove it. Unscrew the cable clamp.

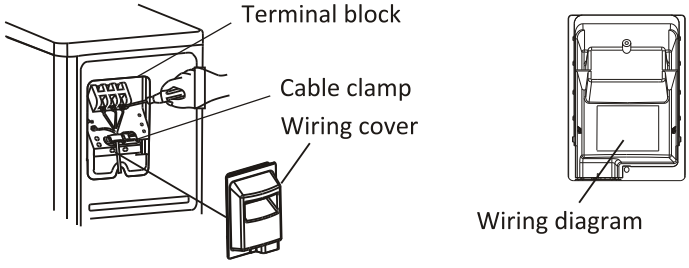

Model	Min. Circuit Ampacity (A)	Minimum Wire Cross-sectional Area (mm^2)	Recommended Wire Gauge
GL9K115	16	2.5	AWG 14+
GL9K230	9	1.0	AWG 18+
GL12K115	17	2.5	AWG 14+
GL12K230	11	1.5	AWG 16+
GL18K230	13	1.5	AWG 16+
GL24K230	19	2.5	AWG 12+

- According to the wiring diagram pasted inside the wiring cover or the picture below, connect the signal and power cables to the corresponding terminals. Ensure all connections are firm and secure.

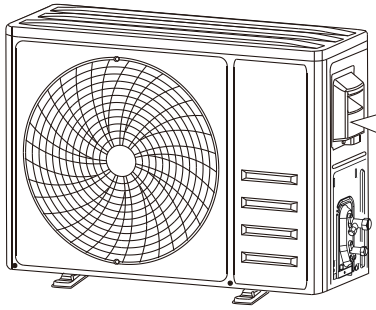

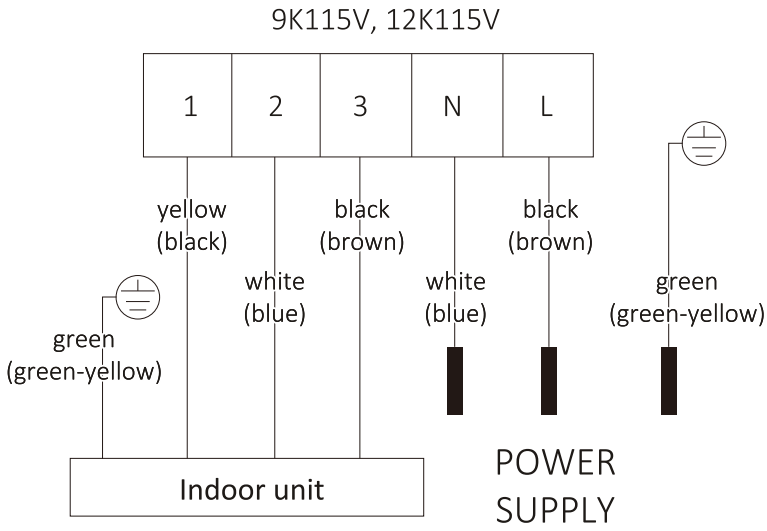

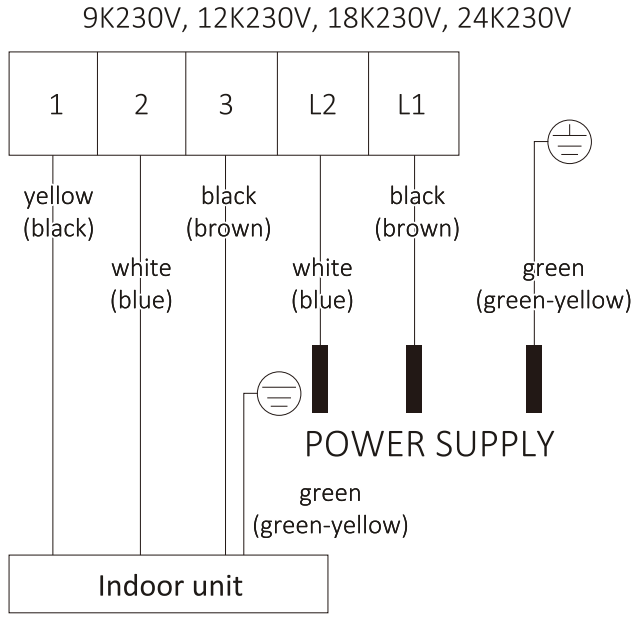

NOTE: Due to different production batches, the wire color may be different.

- Reinstall the cable clamp and wiring cover.

NOTE:

- When connecting the wires of indoor and outdoor units, the power should be cut off.
- Make sure that the wires are well-connected. If you have any problems, consult a professional or TURBRO customer service team.

Step 5: Connect Refrigerant Pipe

- Remove the protective caps from the end of the valves. Take off the plastic cover in the pipe ports.
- After aligning the refrigerant pipes, rotate the flare nut of the refrigerant pipe and tighten the nut as tightly as possible by hand.
- Use a spanner to hold the body of the valve and use a torque wrench to tighten the flare nut according to the torque table below.

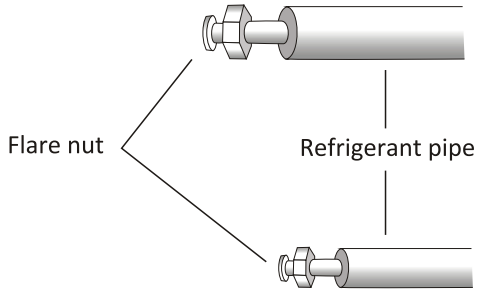

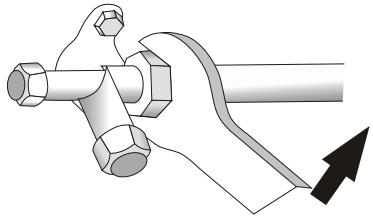

Torque Table

PIPE SIZE	TIGHTENING TORQUE		
Inch (mm)	Newton meter	Pound-force foot	Kilogram-force meter
1/4 (6.35)	18 - 20	13.3 - 14.7	1.9 - 2.0
3/8 (9.52)	30 - 35	22.2 - 25.8	3.1 - 3.5
1/2 (12.00)	45 - 50	33.2 - 36.8	4.6 - 5.1
5/8 (15.88)	60 - 65	44.3 - 47.9	6.2 - 6.6

Note On Pipe Length

The length of refrigerant pipe will affect the performance and energy efficiency of the unit. The refrigerant pipe included is 16.5ft (5 meters).

If necessary, you can change the length of the refrigerant pipe by referring to the table below for specifications on the maximum length.

Model	Minimum Length	Maximum Length
GL9K115	3 m/10 ft	15 m/49 ft
GL9K230		15 m/49 ft
GL12K115		15 m/49 ft
GL12K230		15 m/49 ft
GL18K230		25 m/82 ft
GL24K230		25 m/82 ft

Refrigerant Piping Connection Instructions

Improper pipe shortening or expansion might cause refrigerant leakage. Please take extra care to cut and flare them properly to ensure the efficient operation and minimize the need for future maintenance.

▷ **Cut pipes**

- Measure the distance between the indoor and outdoor units.
- Using a pipe cutter, cut the pipe a little longer than the measured distance.
- Make sure that the pipe is cut at a perfect 90° angle.

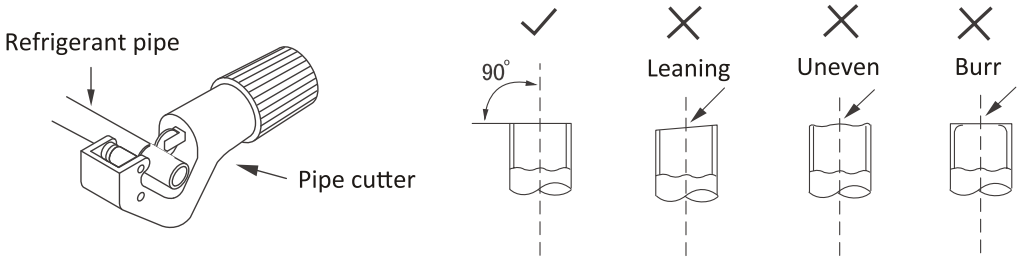

▷ **Remove burrs**

Burrs can affect the air-tight seal of the refrigerant piping connection. They must be completely removed.

- Hold the pipe at a downward angle to prevent burrs from falling into the pipe.
- Using a reamer or deburring tool, remove all burrs from the cut section of the pipe.

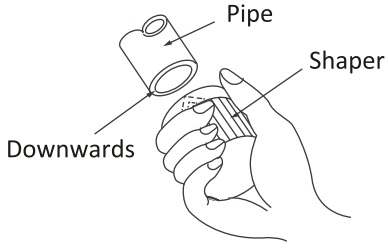

▷ **Flare pipe ends**

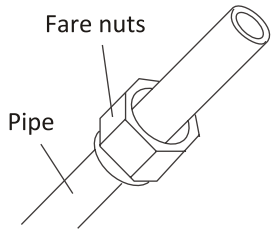

- After removing burrs from the cut pipe, seal the ends with tape to prevent foreign materials from entering the pipe.
- Sheath the pipe with insulating material.
- Place flare nuts on both ends of the pipe. Make sure they are facing in the right direction, because you can't put them on or change their direction after flaring.
- Remove the tape from the ends of the pipe when ready to perform flaring work.
- Clamp flare form on the end of the pipe. Place the flaring tool onto the form. Turn the handle of the flaring tool clockwise until the pipe is fully flared.

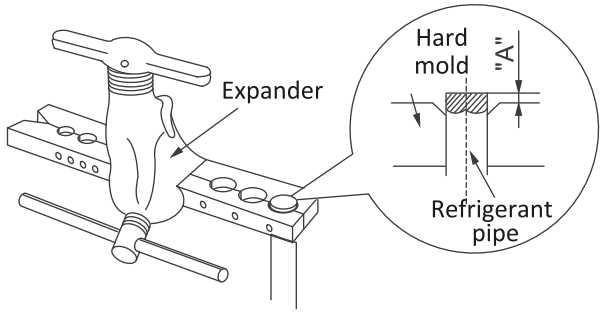

NOTE: The end of the pipe("A") must extend beyond the edge of the flare form in accordance with the dimensions shown in the table below.

Outer diameter(mm)	Minimum A (mm)	Maximum A (mm)
Φ6 - 6.35(1/4")	0.7	1.3
Φ9 - 9.52(3/8")	1.0	1.6
Φ12-12.7(1/2")	1.0	1.8
Φ15.8-16(5/8")	2.2	2.4

- Remove the flaring tool and flare form, then inspect the end of the pipe for cracks and even flaring. If there is any blemish, do it again according to the steps above.

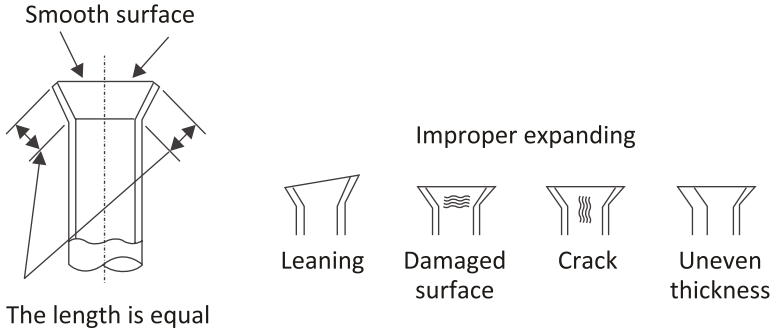

▷ **Connect pipes**

When connecting refrigerant pipes, be careful not to use excessive torque or to deform the piping in any way. You should first connect the low-pressure pipe, then the high-pressure pipe.

Step 6: Electrical safety inspection

Check the voltage of wires in the electric box, as well as indoor and outdoor unit wiring box.

Model	Indoor Unit	Outdoor Unit and Electrical Box
115V unit	Between terminal l and 2 is within 0-24V. Between terminal 2 and 3 is within 100-140V.	Between terminal 1 and 2 is within 0-24V. Between terminal L and G/N is within 100-140V. Between terminal N and G is OV.
230V unit	Between terminal 1 and 2 is within 200-250V. Between terminal 2 and 3 is within 200-250V.	Between terminal 1 and 2 is within 0-24V. Between terminal L1/L2 and G is within 100-140V. Between terminal L1 and L2 is 200-250V.

Step 7: Vacuum Pumping

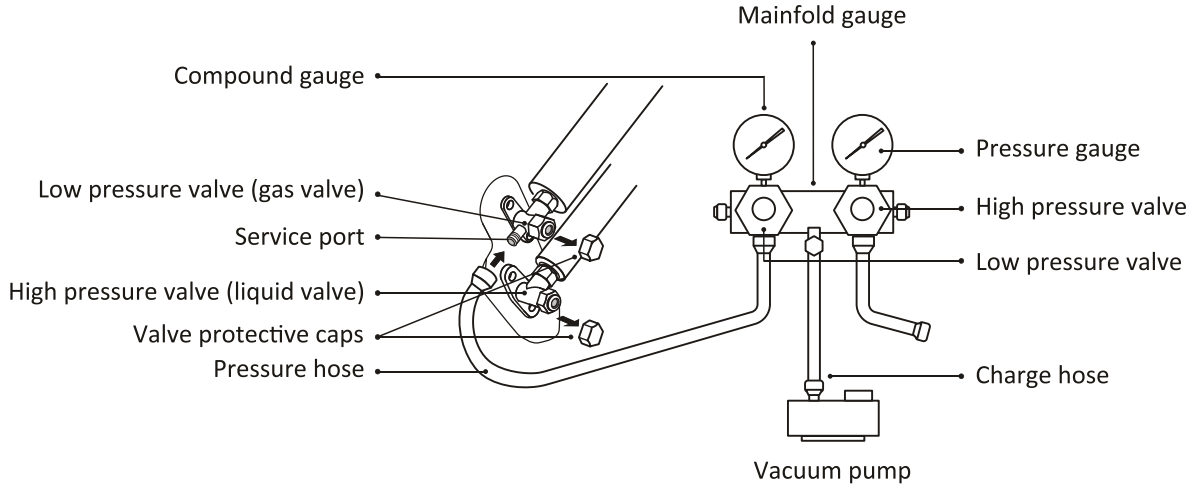

A

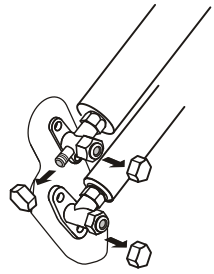

Take down the protective caps from the service port, low-pressure valve, and high - pressure valve.

B

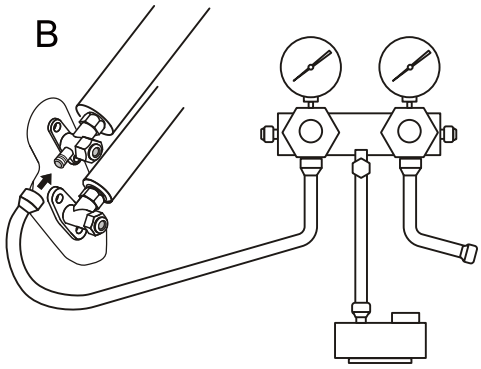

Connect the pressure hose to the service port and the manifold gauge to the vacuum pump.

C

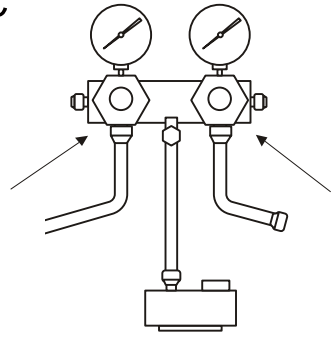

Open the low-pressure valve.
Close the high-pressure valve.

D

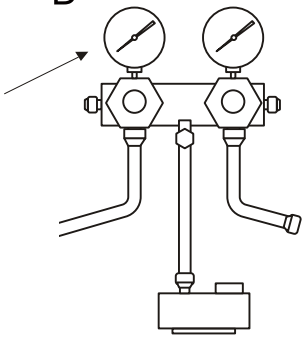

Turn on the vacuum pump for more than 15 minutes.
Make sure it indicates -0.1 MPa.

E

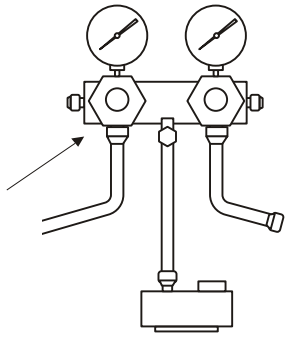

Close the low-pressure valve FIRST.
Turn off the vacuum pump.
Wait for 5 minutes, make sure the pressure change does not exceed 0.005 MPa.

F

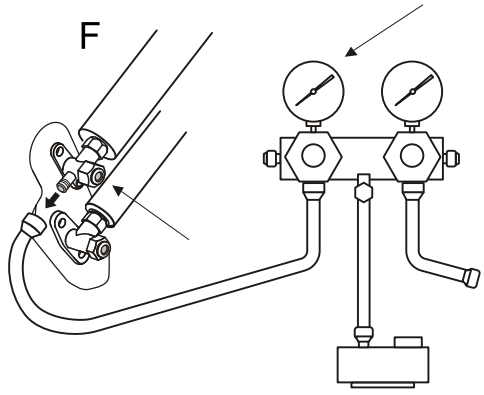

FIRST open the low-pressure valve for about 10 seconds and close. Quickly remove the pressure hose when the pressure indicates above 0.

G

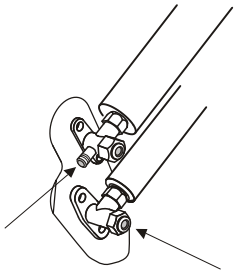

Open high-pressure valve 1/4 turn counter clockwise.
Press service port for 3 seconds.

H

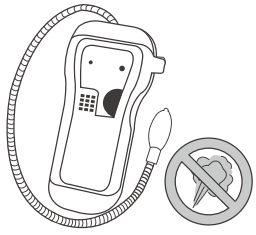

Check whether there is any leakage. Refer to the “Refrigerant leakage detection” section in next page for more details.

I

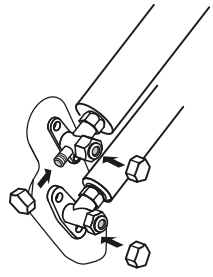

Fully open the low-pressure valve and high -pressure valve. Reinstall all protective caps tightly and the valve cover.

Inspection Before Use

Electrical safety inspection

- Check whether the power supply voltage complies with that on the rating label.
- Check whether there is any wrong or missing connection between the power cables, signal cables, and earth cables.
- Check whether the earth resistance and insulation resistance comply with requirements.

Installation safety inspection

- Confirm the direction and smoothness of the drainage pipe.
- Confirm that the joint of the refrigerant pipe is installed completely.
- Confirm the safety of the outdoor unit, mounting plate, and indoor unit installation.
- Confirm that the valves are fully open.
- Confirm that there are no objects or tools left inside the unit.
- Complete installation of indoor unit filter and panel.

Refrigerant leakage detection

Check the piping joint, the connector of the two valves of the outdoor unit, the service port of the gas valve, the welding port, etc., where leakage may occur.

▷ **Soapy water detection**

Apply soapy water or foam evenly on the parts where leakage may occur and observe whether bubbles appear or not. If not, there is no leakage.

▷ **Leak detector method**

Use a professional leak detector and read the instruction of operation, detect the position where leakage may occur. The duration of leak detection for each position should last for 3 minutes or more.

If the test result shows that there is leakage, the flare nut should be tightened and tested again until there is no leakage.

After the leak detection is completed, reinstall the valve cover of the outdoor unit.

OPERATING INSTRUCTIONS

Operating from the App

This model is equipped with the Wi-Fi function. Using the APP you can control the air conditioner via an iPhone or Android smartphone anywhere, even outside of your home.

- Supported wireless routers must work with a 2.4G Hz operating frequency. 5.0 GHz frequency is not supported at this time.
- Standard: IEEE 802.11b/g/n
- Supported smartphone system: Android 6.0 or later iOS 11.0 or later

a. Scan this QR code and download it.

b. Launch the app and log in to your account (or sign up for your first use).

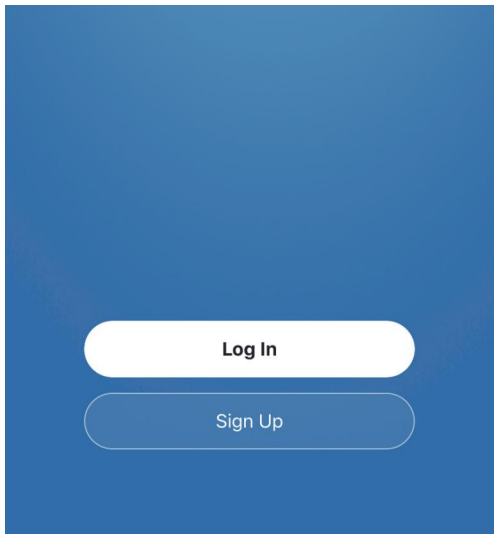

c. Add your device. Turn on Bluetooth and make sure the unit is connected to power supply and in standby mode. Press the icon or the “Split Air Conditioner” button to continue.

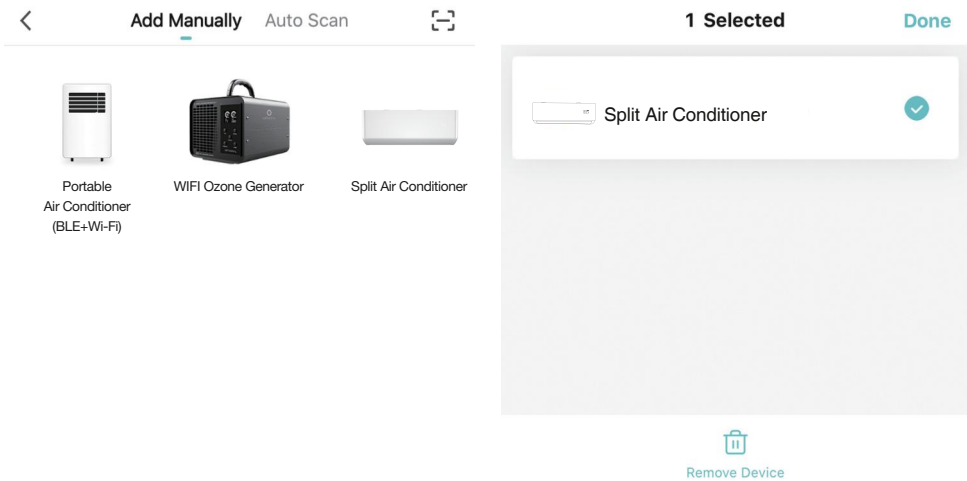

EZ Mode

- Press the "display" button on the controller for 6 times in 8 seconds to switch on WiFi function. The indoor unit displays "CF".
- Enter Wi-Fi password and choose “EZ Mode” (default).
- When the app instruction asks to reset the device by pressing reset button, please operate one of the three methods as followed to reset.

  1. Power on the unit, press the "display" button on the controller for 6 times in 8 seconds. The display will beep two sounds and indicate “AP”. Then connect it by AP mode.

  2. Open the front panel of indoor unit and unplug the USB module. After 1 minute, reinstall it. The unit will display “CF” again.

  3. Switch off the disconnect switch(not included) and the electric box switch for 1 minute and turn it on again. The unit will display “CF”.
- Press the “Next” button. The app will start to search for your device. You can see the percent rate of the connecting process, at the same time “PP”, “SA”, “AP” flash on the indoor unit display in turn.

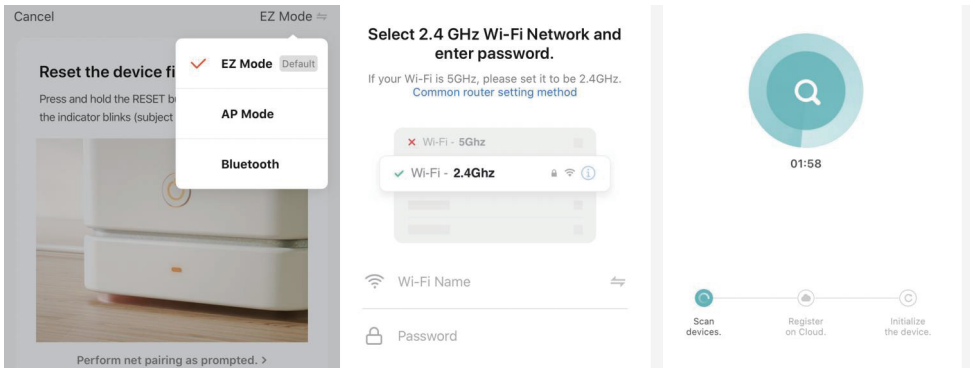

AP Mode (if EZ Mode doesn’t work)

- Power the unit on (not in standby mode) and press the “display” button for 6 times in 8 seconds. The indoor unit will display “AP”. Choose “AP” mode.
- Choose your preferred Wi-Fi and enter the password, then press the “next” button to continue. Select the Device as name “SmartLife-XXX” at the WLAN setting, then go back to the app and continue.
- The app will start connecting to your device. It may take some time, please wait patiently. At the same time “PP”, “SA”, “AP” flash on the indoor unit display in turn.

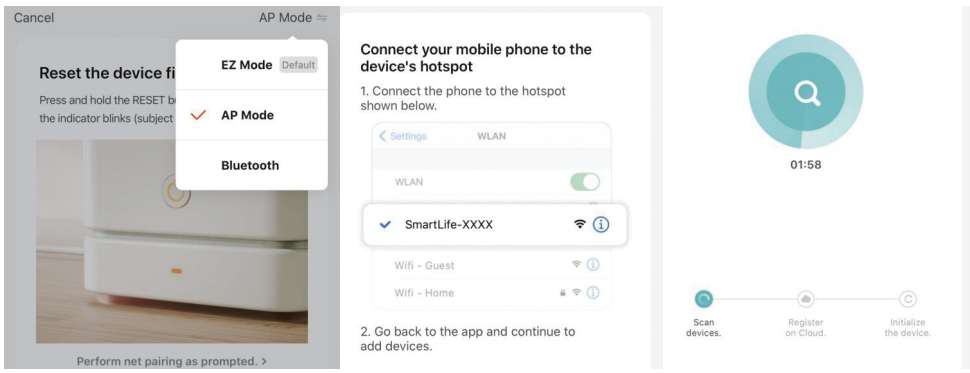

- If you failed to add the device, please check if your Wi-Fi is 2.4 GHz. If yes, please try to connect again later, or try another Wi-Fi. 5.0 GHz networks are currently not supported.
- The meanings of the code displayed on the indoor unit display:
  AP: Hot-spot connect mode / Access to the Internet
  PP: Searching and trying to connect
  SA: Connected successfully

d. Once you have set up the connection, you can name your device and get started.

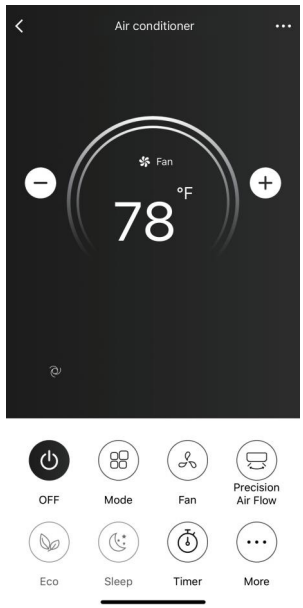

Feel free to explore the smart control dashboard. To invite other phones to control this device, press the button on upright and go to “Share Device” - “Add Sharing”.

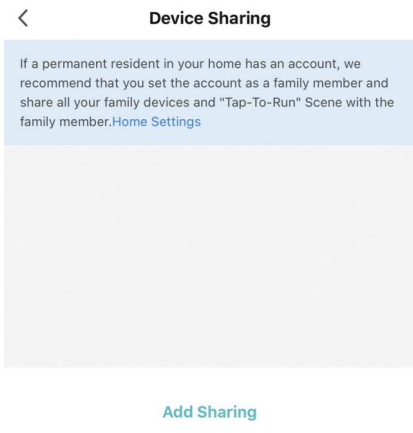

If you connect to the WiFi after powering on the unit for over 3 minutes or have difficulty connecting to the app, you can reset the Wi-Fi signal as mentioned above. If you have any questions, please feel free to email our support team at **support@turbro.com**.

NOTE:

- The APP is only compatible with smartphones and is not available for laptops or tablets.
- APP may not support the latest version of Android or iOS system because of the test of stability. Also may not be compatible with tampered Android or iOS system.
- Due to different network situations, request time-out could happen, and it is necessary to do network configuration again.
- Due to different network situations, the control process may return time-out (30S-60S) sometimes.
- All the illustrations in the manual are for explanation purpose only. The latest APP may be slightly different.
- The APP will continue to be updated with design and content improvements. Check for updates at the Google Play Store or the APP Store.

Voice Control

You can control the split AC via Alexa or Google Assistant. Follow the instruction on the App to connect.

Alexa and Google Voice Command (Suppose your device name is XX)	Description
Alexa/Hi Google, turn on/off XX	Turn on/off the device.
Alexa/Hi Google, Set XX temperature to YY degrees	Setting operating temp at YY degree
Alexa/Hi Google, Increase XX temperature	Increase setting temperature by 1 degree
Alexa/Hi Google, Decrease XX temperature	Decrease setting temperature by 1 degree

Operating from the Remote Control

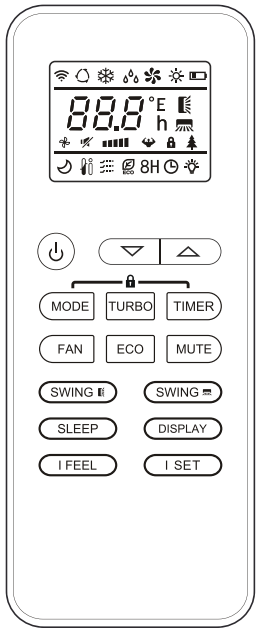

BUTTONS	FUNCTION
⏻	Turn the air conditioner on/off.
△	Increase the set temperature; lengthen the time in TIMER setting.
▽	Decrease the setting temperature; reduce the time in TIMER setting.
MODE	Select the operation mode.
TURBO	Switch the TURBO mode on/off.
	Long press to switch the unit of temperature.
TIMER	Switch the TIMER function on/off.
FAN	Adjust the fan speed.
ECO	Switch the ECO function on/off.
MUTE	Switch the MUTE function on/off.
SWING	Stop/start horizontal deflector movement or set the desired up/down airflow direction.
SWING	Stop/start vertical deflector movement or set the desired left/right airflow direction.
SLEEP	Switch the SLEEP mode on/off.
DISPLAY	Switch the LED display on/off.
I FEEL	Switch the I FEEL function on/off.
I SET	To save the set temperature, setting mode and set fan speed as you need.

The functions are explained in the “Function Description” section of the user manual.

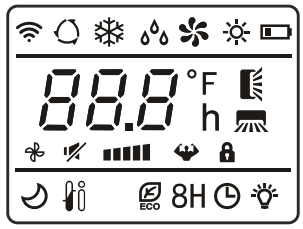

SYMBOLS	MEANING	SYMBOLS	MEANING
	SIGNAL		FAN SPEED
	AUTO MODE		MUTE FUNCTION
	COOL MODE		TURBO
	DRY MODE		CHILD LOCK
	FAN MODE		SLEEP MODE
	HEAT MODE		I FEEL FUNCTION
	BATTERY		ECO MODE
°F	TEMPERATURE	8H	FREEZE GUARD HEATING FUNCTION
	UP-DOWN AUTO SWING		TIMER
	LEFT-RIGHT AUTO SWING		LIGHT

Function Description

MODE Button

Pressing the “Mode” button will cycle through the following modes, as shown below:

AUTO → COOL → DRY → FAN → HEAT

▷ **AUTO MODE**

The unit will automatically switch between Cool/Heat or Fan Mode depending on the ambient room temperature.

- Press the “MODE” button until the symbol appears on the remote screen.
- Pressing the "FAN" button will adjust the fan speed.

▷ **COOL MODE**

Ideal for hot muggy weather when you need to cool and dehumidify the room.

- Press the “MODE” button until the symbol appears on the remote screen.
- Press the △ or ▽ button to select your desired temperature 61°F-88°F (16°C-31°C).
- Pressing the "FAN" button will adjust the fan speed.

▷ DRY MODE

Ideal to reduce room humidity (spring and autumn, rainy periods or damp rooms, etc).

- Press the “MODE” button until the symbol appears on the remote screen.
- In this mode, the fan speed cannot be adjusted.

▷ FAN MODE

The unit only blows air, not heating or cooling the room.

- Press the “MODE” button until the symbol appears on the remote screen.
- Pressing the “Fan” button will adjust the fan speed.

▷ HEAT MODE

Ideal for cold weather when you need to heat the room.

- Press the “MODE” button until the symbol appears on the remote screen.
- Press the △ or ▽ button to select your desired temperature 61°F-88°F (16°C-31°C).
- Press the "FAN" button can adjust the fan speed.

NOTE:

- In heating mode, the appliance will automatically activate a defrost cycle when needed. This procedure usually lasts for 2-10 minutes. During defrosting, the indoor unit fan stops running. After defrosting, it will resume heat mode automatically.
- If necessary, you can press the “ECO” button 10 times within 8 seconds while using the heating mode to start forced defrosting.

FAN Button

- Press the “FAN” button to adjust the desired fan speed.
- It can be set to AUTO / MUTE / LOW / LOW-MID / MID / MID-HIGH / HIGH / TURBO speed circularly.

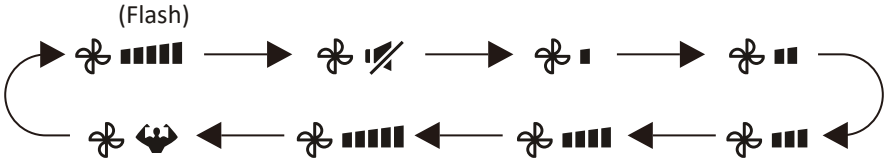

NOTE: The fan speed can only be changed under AUTO / COOL / FAN / HEAT mode.

SWING Button

This function is useful for adjusting the up/down or left/right swing of air circulation.

- Press the “SWING ” button to activate the deflector to swing from up to down. The icon will appear on the remote display. Press the button again to stop the swing movement at the current angle.
- Press the “SWING ” button to activate the deflectors to swing from left to right. The icon will appear on the remote display. Press the button again to stop the swing movement at the current angle.

NOTE: Never put fingers, sticks, or other objects into the air inlet or outlet vents. Such accidental contact with live parts might cause damage or injury.
In heating mode, press the “SWING ” button will activate the deflector to swing up/down **after 3 minutes** to make sure blowing warm wind to you.

SLEEP Button

This function is useful at night as it maintains the room at optimum temperature silently without excessive fluctuations in either temperature or humidity.

- Press the “SLEEP” button to set sleep mode. The icon will appear on the remote and indoor unit display.
- Press this button again to cancel sleep mode and the icon will disappear.

NOTE:

- When in COOL MODE, the selected temperature will increase automatically during the 2nd-5th hours. Then the temperature will automatically decrease for the next 5 hours back to the selected temperature at the 10th hour and quit sleep mode automatically after that.
- Sleep function is available only on COOL / HEAT modes. In this mode, the fan speed is always low.

MUTE Button

- Press the “MUTE” button to activate this function, and will appear on the remote display. In this mode, the indoor and outdoor unit will operate at the lowest fan speed to be quiet.
- When pressing the “FAN” or “TURBO” button, the mute function will be canceled.

NOTE: Mute function is available only on COOL / FAN / HEAT / AUTO mode.

TURBO Button

This function is ideal for cooling the room in the shortest time. When this function is active, the unit will automatically be set to high fan speed.

- To activate the turbo function, press the “TURBO” button and the will appear on the remote display.
- In COOL / HEAT mode, when you select the TURBO feature, the unit will operate the fast cooling/heating with the highest fan speed.
- To cancel this function, press the “TURBO” button again.
- Press the “TURBO” button for 3 seconds to switch the temperature scale between Fahrenheit and Celsius.

TIMER Button

This timer can be used to delay the unit start-up or shutdown. This avoids wasting electricity by optimizing operating periods.

▷ **Programming start-up**

- When the unit is off, press the “Timer” button, and set time will appear on the remote screen and flash. Press ⌃ or ⌄ button to set desired delayed start-up time. The timer setting increases/decreases by half an hour between 0 and 10 hours and by one hour between 10 and 24 hours. Press the “TIMER” button again to confirm.
- When the timer is active, and set time will appear on the indoor unit display.
- After the timer setting, you can continue to set your desired mode and temperature.
- If you press the timer button again the timer will be canceled and the display will disappear.

▷ **Programming shut down**

- When the unit is on, press the “Timer” button. Press ⌃ or ⌄ button to set desired delayed shut-down time. The timer setting increases/decreases by half an hour between 0 and 10 hours and by one hour between 10 and 24 hours. Press the “TIMER” button again to confirm.
- When the timer is active, will appear on the indoor unit screen.

- Press the timer button again, the timer will be canceled and the ⏲ will disappear.

ECO Button

In this mode the set temperature will be limited to 79°F-88°F(26°C-31°C) in COOL mode and 61°F-77°F (16°C-25°C) in HEAT mode to save energy.

- Press the "ECO" button to activate ECO mode and the ECO appears on the display.
- Once you set the temperature below 61°F(26°C) in COOL mode or above 77°F(25°C) in HEAT mode, the ECO mode will be automatically canceled.
- Press the button again to cancel it.

NOTE: The ECO function is available on COOL / HEAT modes.

I FEEL Button

This function enables the remote control to measure the temperature at its current location and send this signal to the air conditioner to optimize the temperature around you to ensure comfort.

Normally, the ambient temperature will be based on a sensor located inside the indoor unit. In I FEEL mode, the ambient temperature is based on a sensor in the remote control. If the remote control is unable to send a signal back to the indoor unit, this function will automatically be turned off and will operate normally.

- Press the "I FEEL" button to activate the function, and the will appear on the remote display.
- Press the button again to cancel it.

NOTE: This function will automatically deactivate after 2 hours.

I SET Button

Remember your favorite setting and run it again by pressing one button.

▷ **Remember the favorite setting**

- On COOL / FAN / DRY / HEAT mode, long press the "I SET" button for over 3 seconds to remember the current setting.
- When "AU" flashing appears on the remote display, it means the remote controller remembers the setting.

NOTE: Press any button to quit remembering the procedure and you can reset it by repeating the steps.

▷ **Run the I SET setting**

- On COOL / FAN / DRY / HEAT mode, only press the "I SET" button to activate the function.
- The appliance will run on your previous saved setting, and you will see "AU" flashing on the remote screen.
- Press the "I SET" button again or any other button to cancel this function.

DISPLAY Button

Switch the LED display ON/OFF on the indoor unit panel.

- Press the "DISPLAY" button to switch off the LED display on the panel and the will disappear on the remote screen. Press again to switch on the LED display.

Other Functions

Child Lock Function

Long press the "MODE" and "TIMER" buttons simultaneously to switch on/off this function. When in this mode, the remote screen will display 🔒 and will not send any signal to the air conditioner.

Self-Clean Function

This function helps carry away the accumulated dirt, bacteria, etc from the indoor evaporator.

To activate this function, turn off the indoor unit first, then press the “SWING ”and “SWING ” buttons simultaneously until hearing a beep. The “AC” will appear on the remote and the indoor unit display. This function will run for about 30 minutes, and it will return to the previous mode when complete.

You can press the button to cancel this function during the process and will hear 2 beeps when it's finished or canceled.

NOTE:

- It's normal if there is some noise during the process.
- We suggest operating this function at the following ambient conditions to avoid certain safety protection features. It's suggested to utilize this function every 3 months.

Indoor unit	Temp < 86°F (30°C)
Outdoor unit	41°F (5°C) < Temp < 86°F (30°C)

Freeze Guard Heating Function

This mode is useful if you are going to be away from the home for an extended period of time and want to prevent your unit and/or water pipes in your home from freezing.

- Long press the “ECO” button over 3 seconds to switch on this function. When the function is activated, 8°C (46°F) will appear on the remote display.
- This function will automatically start heat mode when the room temperature is lower than 8° C (46°F). If the room temperature is higher than 18°C (64°F), the appliance will cancel this function automatically.
- Long press the “ECO” button for 3 seconds to switch off this function. The unit will also be turned off.

Using the Remote

- Point the remote control toward the air conditioner.
- Check that there are no objects between the remote control and the signal receptor in the indoor unit.
- Never leave the remote control exposed to the sun.
- Keep the remote control at a distance of at least 1m from the television or other electrical appliances.

Inserting or Replacing the Batteries

- Remove the cover on the rear of the remote control.
- Insert two "AAA" 1.5V batteries in the correct position (see instructions inside the battery compartment).

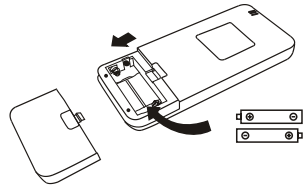

NOTE:

- If the remote control unit is replaced or disposed of, the batteries must be removed and discarded in accordance with current legislation as they are harmful to the environment.
- Do not mix old and new batteries. Do not mix alkaline, standard (carbon-zinc) or rechargeable (nickel-cadmium) batteries.
- Do not dispose of batteries in fire. Batteries may explode or leak.
- Remove the batteries if the remote control won’t be used for a long time.

CLEANING

Warning

- When cleaning, you must shut down the machine and cut off the power supply for more than 5 minutes.
- Under no circumstances should the air conditioner be flushed with water.
- Volatile liquid (e.g. thinner or gasoline) will damage the air conditioner, so only use a soft dry cloth or wet cloth dipped with neutral detergent to clean the air conditioner.
- Pay attention to cleaning the filter regularly to avoid dust covering which will affect the filter effect. It's recommended to clean the filter every 3-6 months. When the operating environment is dusty, the cleaning frequency should be increased appropriately.
- After removing the filter, do not touch the fins of the indoor unit to avoid scratching.

Cleaning the Outer Case

If there's dust on the surface of the outer case, gently wipe it with a soft cloth.

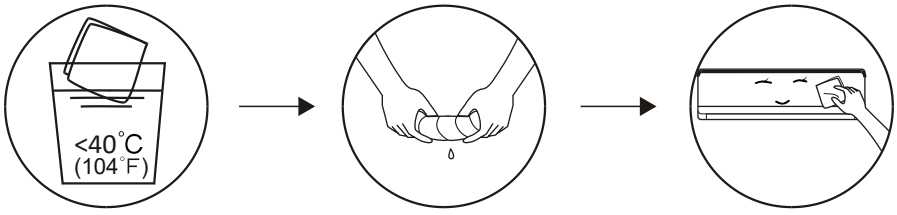

Cleaning the Filter

- Grasp the raised handle on the filter by hand, and then pull the filter out in the direction deviating from the unit, so that the upper edge of the filter is separated from the unit. The filter can be removed by lifting the filter upwards.

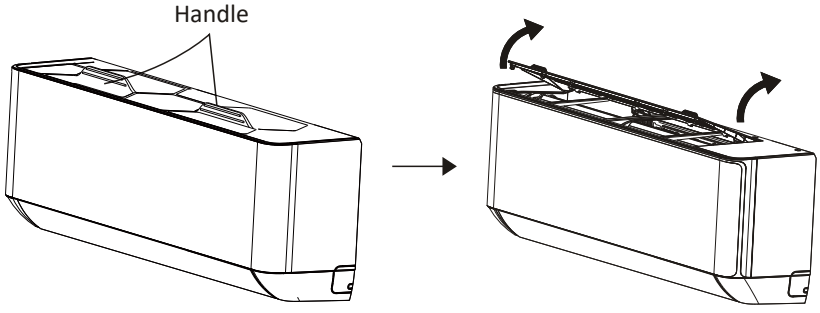

- Clean the filter with soapy water and air dry it.

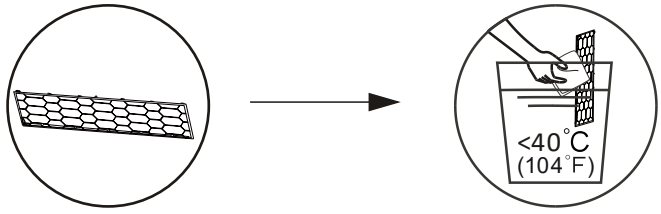

- When installing the filter, first insert the lower end into the corresponding position of the unit, and then squeeze the upper end of the filter into the corresponding buckling position of the unit body.

NOTE:

- When you find accumulated dust in the filter, please clean the filter in time to ensure clean, healthy and efficient operation inside the air conditioner.
- Do not touch the metal fins in the air conditioner after removing the filter, as they may cause personal injury.
- Do not attempt to dry the filter with a hairdryer or other heating elements as this may deform or ignite the filter.
- Do not operate the air conditioner if the air filter is missing.

Maintenance Checklists

Pre-Season Maintenance Checklist

- Check whether there are obstacles at the air inlet and outlet of indoor and outdoor units.
- Clean the filter.
- Install the batteries of the remote control and check whether the power is on.
- Check whether the drain pipe is unobstructed.

Post-Season Maintenance Checklist

- Clean the filter.
- Take out the batteries of the remote control.

MALFUNCTION CODES

The unit has a self-diagnosis system to identify a number of malfunctions. Error messages will be displayed on the indoor unit display. If this is displayed, contact TURBRO service team.

DISPLAY	MALFUNCTION NAME
E1	Indoor unit room temperature sensor damaged.
E2	Indoor unit coil temperature sensor damaged.
E3	Outdoor unit coil temperature sensor damaged.
Fy / E4	Gas leakage protection.
E6	Indoor fan motor malfunction.
E7	Outdoor ambient temperature sensor damaged.
E8	Outdoor discharge temperature sensor damaged.
EF	Outdoor fan motor malfunction.

DISPLAY	MALFUNCTION NAME
E0	Indoor and outdoor communication malfunction.
E9	Outdoor IPM protection.
EA	Outdoor current detect fault.
EE	Outdoor PCB EEPROM fault.
F6	The compressor lack of phase / anti-phase protection.
P2	Over current protection.
P4	Outdoor discharge pipe over temperature protection.
P8	Outdoor over temperature / under temperature protection.

TROUBLESHOOTING

Troubleshoot your problem by using the chart below. If the air conditioner still does not work properly, please contact TURBRO customer team via **support@turbro.com**.

ISSUE	POSSIBLE CAUSE	POSSIBLE REMEDY
The appliance does not operate	A. Incorrect connections of cable or electric wires. B. Have set a delayed start-up time. C. It sometimes stops operating to protect the appliance. D. Voltage higher or lower than the rated voltage range. E. Control Board/Fan motor Damaged.	A. Check and reconnect the wires in a correct way. B. Cancel the TIMER function. C. Wait for 30 minutes, if the problem can't be solved, contact the TURBRO customer service team. D. Check and make sure the supply voltage is stable and consistent with the rated range. E. Contact the TURBRO customer service team.

ISSUE	POSSIBLE CAUSE	POSSIBLE REMEDY
No air is blowing from the air conditioner	Air outlet/Inlet is blocked.	Check and remove the obstacles blocking the air outlet/inlet.
Insufficient airflow, either hot or cold	A. Air filter is blocked by dust. B. Unsuitable temperature setting. C. Other sources of heat in the room. D. The windows, doors, and/or curtains are not closed. E. No refrigerant.	A. Clean the air filter. B. Adjust the temperature setting and mode. C. Remove the heat sources if possible. D. Make sure all the doors, windows, and curtains are closed. E. Contact qualified professionals to refill refrigerant.
The appliance does not respond to commands	A. Remote control is not close enough to the indoor unit. B. The batteries of the remote control need to be replaced. C. Obstacles between the remote control and signal receiver of the indoor unit.	A. Stand closer in front of the indoor unit. B. Replace with two new AAA(1.5V) batteries. C. Remove the obstacles.
A fine mist comes from the air outlet	This occurs when the air in the room becomes very cold, for example in the COOL/DRY modes.	After the indoor temperature and humidity decrease and the mist will disappear.
Strange odor	Check whether there's odor source such as new furniture.	Remove the odor source and clean the filter.
Strange noise	Has the unit just been turned on/off or adjust temperature?	This sound is made by the expansion or contraction of the front panel due to variations in temperature and does not indicate a problem.
Produces a gurgling sound	Has the unit just been turned on?	Backflow of liquid in the refrigerant circulation.

If you notice or experience any of the following conditions, please turn off the air conditioner, disconnect from power, discontinue use, and contact support immediately.

- Strange noises during operation.
- Faulty electronic control board.
- Faulty fuses or switches.
- Spraying water or objects inside the appliance.
- Very strong smells coming from the appliance.

WARRANTY & CUSTOMER SUPPORT

WARRANTY

TURBRO provides a 5-year limited warranty for TURBRO products from the date of purchase, subject to the following conditions and limitations outlined below.

What is covered?

- This warranty is limited to replacement of part(s) proved to be defective in material or workmanship, after said defect is confirmed by the manufacturer's inspection.
- The manufacturer may, at its discretion, fully discharge all obligations with respect to this warranty by refunding the wholesale price of the defective part(s).

What is not covered?

- Damage caused by the owner when attempting to fix or alter the product themselves.
- Damage caused by misuse, abuse, neglect, alterations, or unauthorized repair.
- Natural depreciation.
- Any alteration misuse of the product will nullify this warranty.
- This warranty is non-transferable, which is effective for the original buyer from the authorized seller only.

How to request warranty services?

- To obtain the benefit of this warranty, please leave a message online (www.turbro.com/contact), or send an email to support@turbro.com.

What will TURBRO do?

- Replace the item if not repairable.
- Refund the item under certain circumstances.

CUSTOMER SUPPORT

We are here to help anytime!

Any problems, write to us via support@turbro.com. We will get back to you within 1 business day.

TURBRO

www.turbro.com

TURBRO

© Katmai Technology Limited

support@turbro.com
www.turbro.com
(323) 438-3334

V20240507

PAP 22