Assembly Instructions

Caution : You must read this before you proceed

Care & Maintenance



- Not for commercial use. For residential use only.



- Furniture may scratch floors. We recommend using furniture pads to protect your floors.



- Do not put hot items directly on furniture surface.



- Do not clean furniture with harsh cleansers or polish.



- Do not place furniture under direct sunlight.



- Do not place furniture near heating or cooling vents.



- Do not write on furniture without a padded barrier to protect the surface.



- Do not place furniture outside . For indoor use only.



- Stains may be removed with mild soap solution and damp cloth.



- Children should not climb or jump on the furniture.



- Dust and pick-up spills using a clean, non-colored, lint-free cloth.

Please look in Leg for hardware pack.

CHAIR

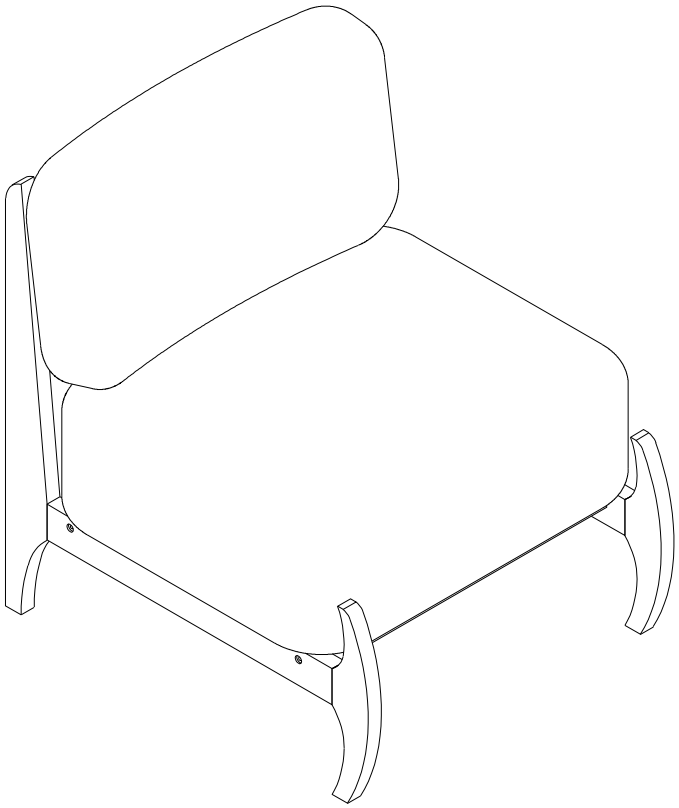

Parts List

Label	Picture	Description	QTY
A	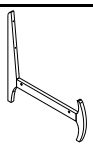	Left leg	1
B	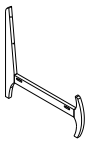	Right leg	1
C	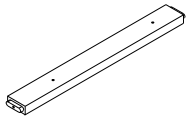	Bottom bar	2
D	C 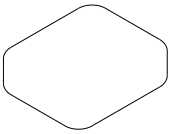	Seat Cushion	1
E	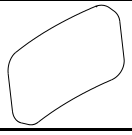	Back Cushion	1

Hardware

Label	Picture	Description	QTY
①	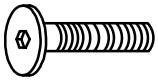	Bolt (Ø1/4*45mm)	13
②		Spring Washer (Ø1/4*11mm)	13
③	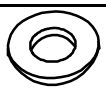	Washer (Ø1/4*14mm)	13
④		Allen Wrench	2
⑤		Wooden Cap	5

Assembly Preparation

Before Beginning Assembly:

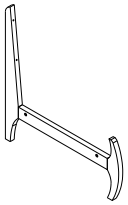
A

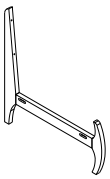
B

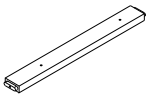
C

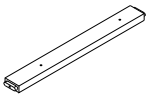
C

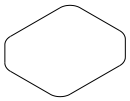
D

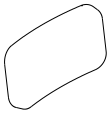
E

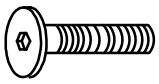
① x13


② x13

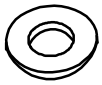
③ x13


④ x2


⑤x5


- Read instructions, cover to cover-


- Have 2 adults on hand for assembly-


- Do not assemble on flooring or carpet-


- Assemble on a clean non-marring surface (packing foam)-


- Save all packaging until finished-

Assembly Steps

Overview

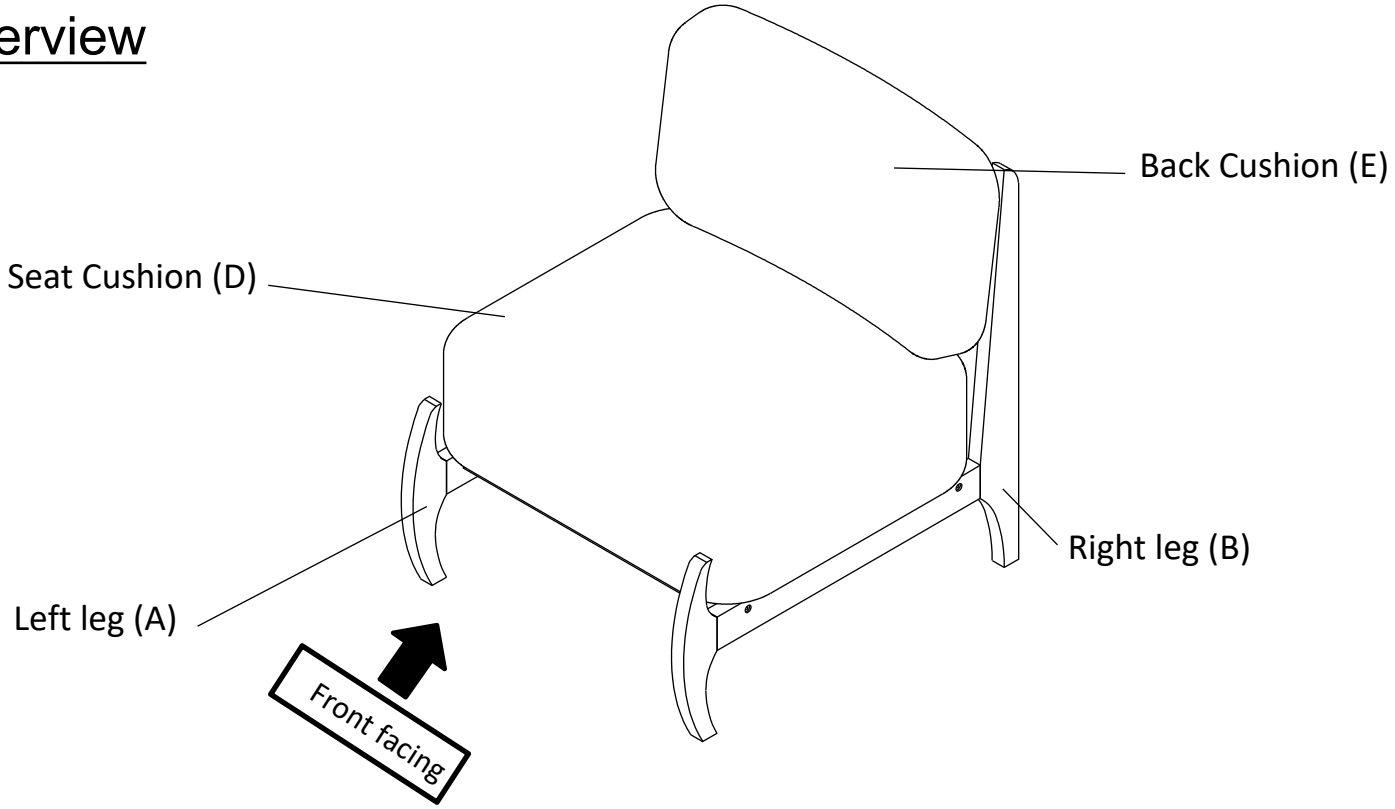

This Chair has multiple parts and may require up to 30 minutes to assemble. To give you an overview of the Chair parts, the above picture is to help you put the various parts into perspective. Please read through the instructions below to familiarise yourself with the parts and steps before assembly.

Step 1

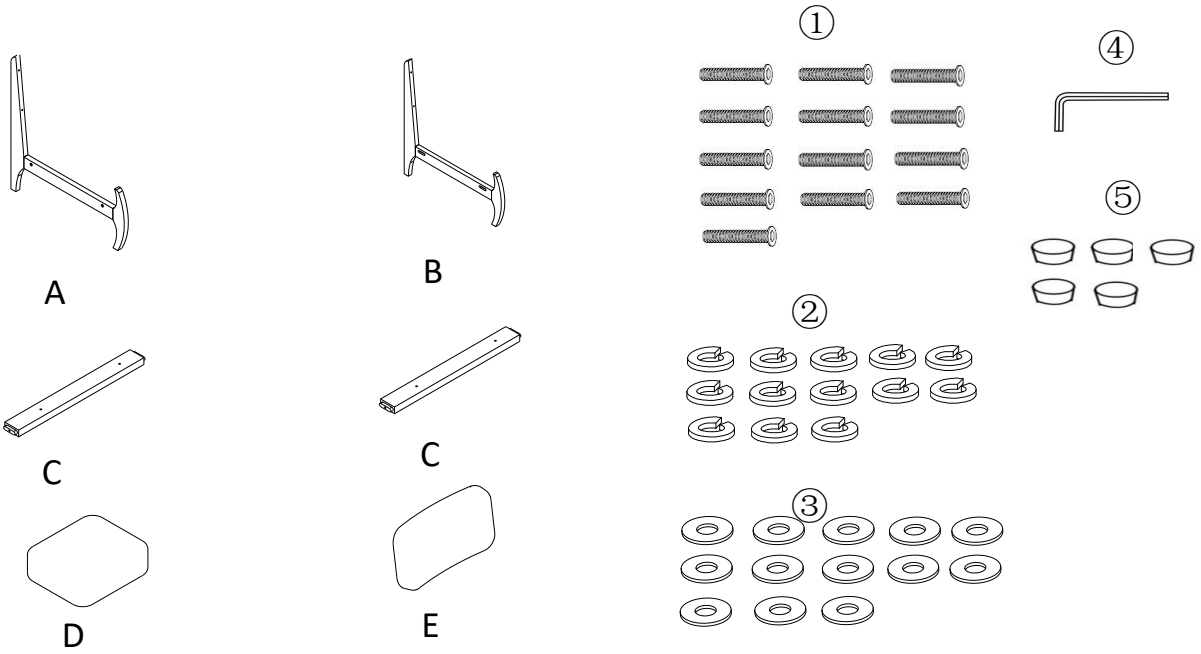

Unpack and place all the Parts and Hardware on a clean, non-marring surface.

Step 2

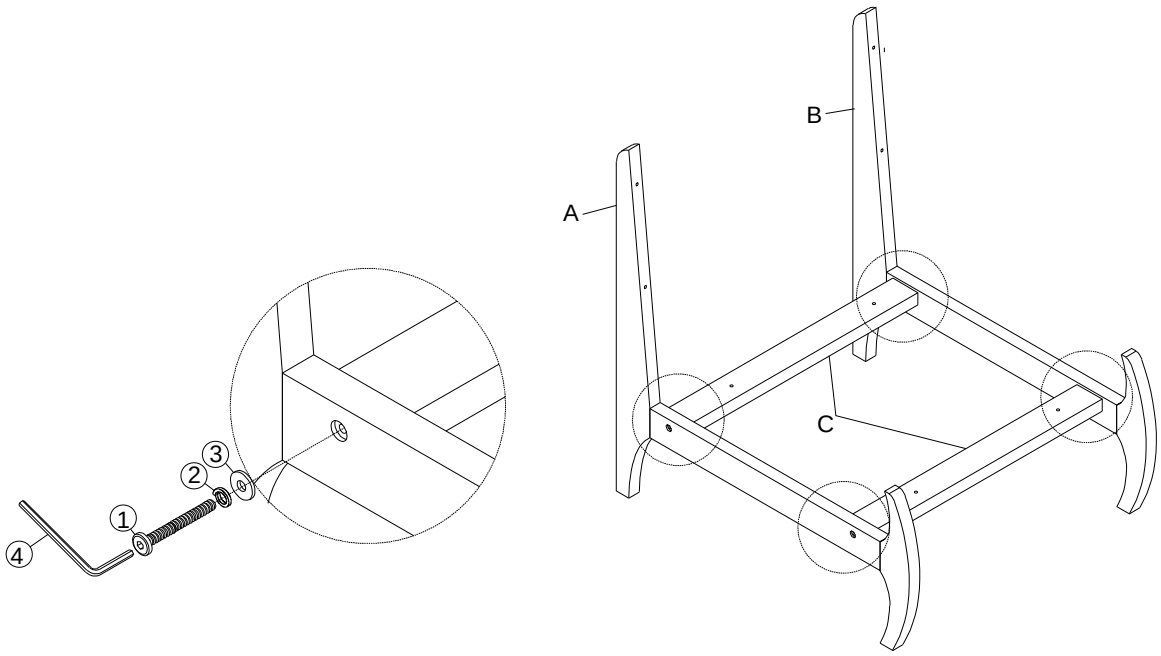

Attach the two Legs(A+B) into the mounting positions of the Bottom Bar(C) using Bolts (①),Spring Washer(②) and Washer(③) with Allen Wrench (④).
Do not fully tighten the Bolts.

Step 3

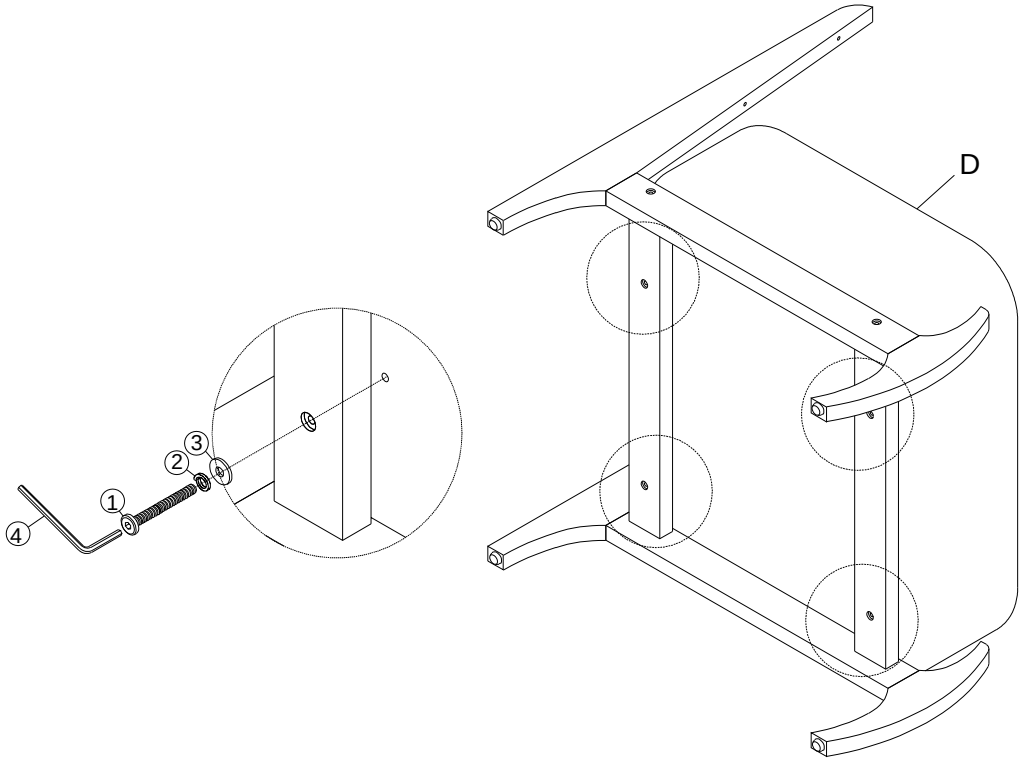

Attach the Seat Cushion (D) into the **Assembled parts in Step 2** using Bolts (①),Spring Washer(②) and Washer(③) with Allen Wrench (④).
Do not fully tighten the Bolts.

Step 4

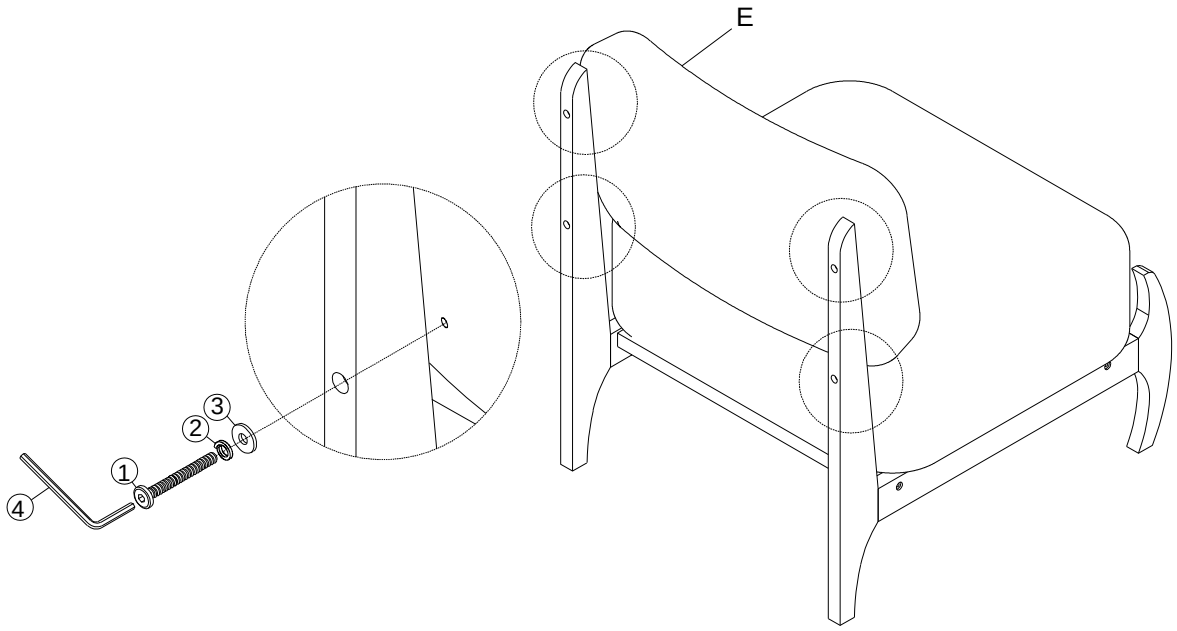

Attach the Back Cushion (E) into the **Assembled parts in Step 3** using Bolts (①),Spring Washer(②) and Washer(③) with Allen Wrench (④).
Tighten all the remaining bolts. DO NOT fully tighten a bolt in one go and then move on to the next. Rather, in asequential manner, gradually tighten each bolt until all bolts are evenlysecured.This methodology will ensure maximumevennessonce all bolts are fullytightened.

Step 5

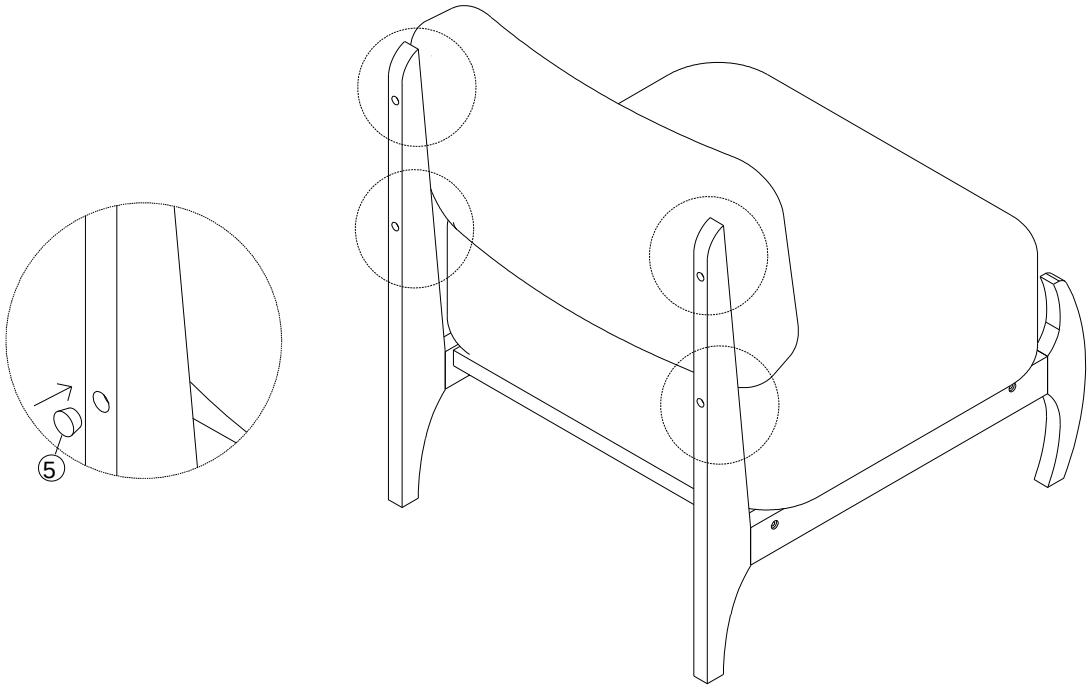

Cover the bolt holes with the Wooden caps(⑤) .

Step 6

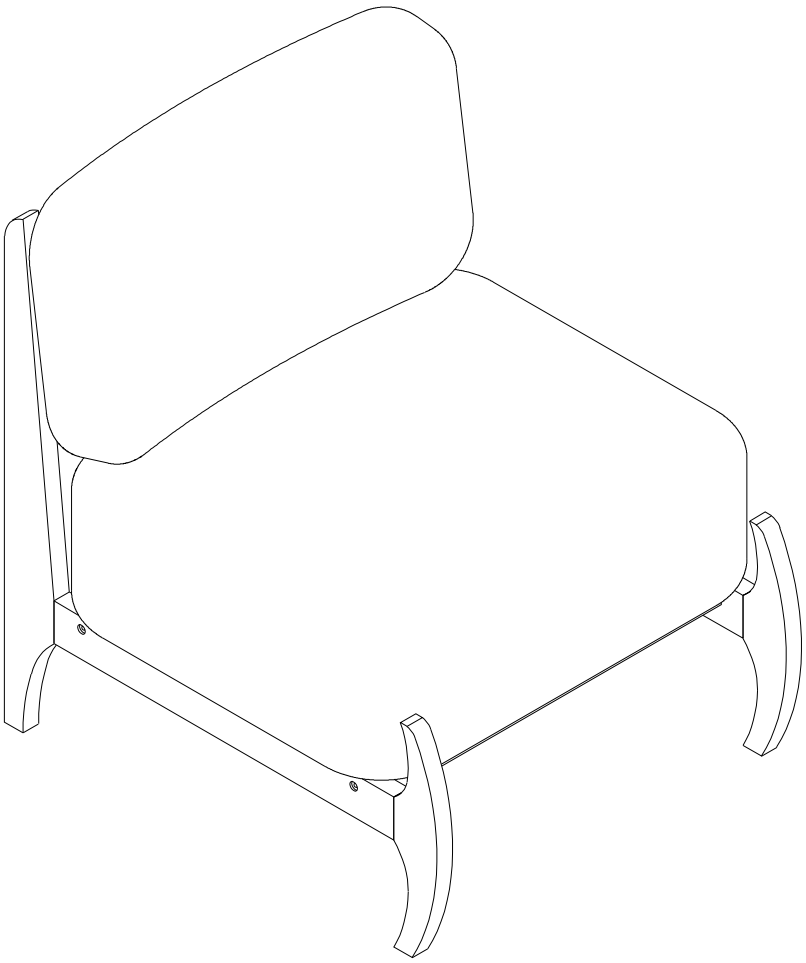

Your chair is ready for use.
Caution: This chair can only be used on a flat, level surface.