ASSEMBLY INSTRUCTION FOR ACME FURNITURE

Coffee Table

Thank you for purchasing this quality product. Be sure to check all packing materials carefully for small parts which may have come loose inside the carton during shipment. Separate, identify, and count all parts and metal hardware. Compare with parts list to be sure all parts are present. If any part(s) are missing or damaged, please contact your local furniture dealer. For efficient and speedy service, please indicate the model number and code letter of the part(s) needed.

*** Do not fully tighten screws until fully assembled ***

COMPONENT PARTS		
DECERPTION	PART NAME	Q'TY(PCS)
①	Top Glass 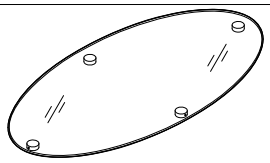	1pc
②	Wood Frame 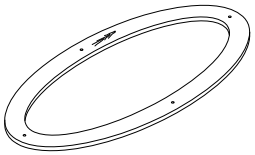	1pc
③	Frame 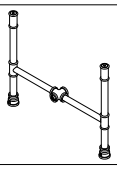	1pc
④	Leg	2pcs
⑤	Tube 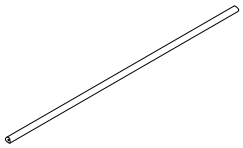	1pc

HARDWARE REQUIRED:

Ⓐ	Bolt 1/4"x5/8" - 1pc
Ⓑ	Bolt 1/4"x1-5/8" - 2pcs
Ⓒ	Set Screw 1/4"x3/8" - 4pcs
Ⓓ	Rod 5/16"x1-5/8" - 4pcs
Ⓔ	Inner Cake Ø33x12 - 4pcs
Ⓕ	Allen Wrench M3 - 1pc
Ⓖ	Allen Wrench M4 - 1pc

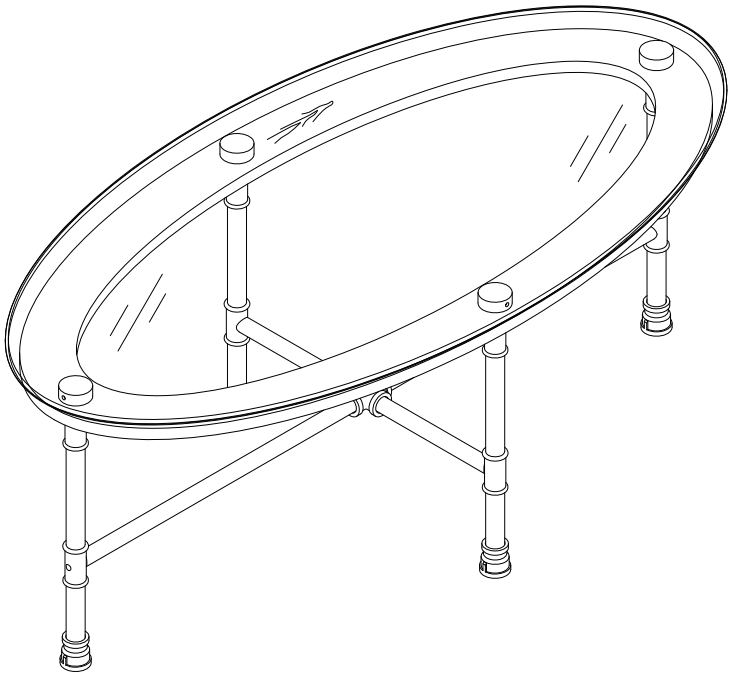

Attention:
***Mattreses not included.
***Some number parts listed on the instruction sheet may not be in parts bag as they may already be assemble.
Carefully check parts and packing materials prior to odering replacements.

How to Assemble:

STEP 1.

Exploded View

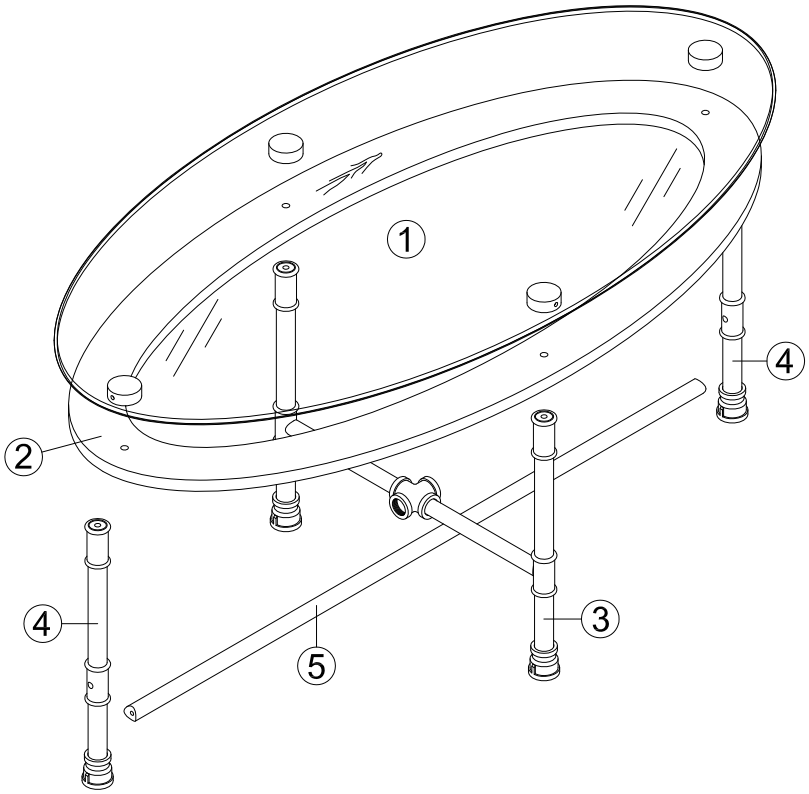

STEP 2.

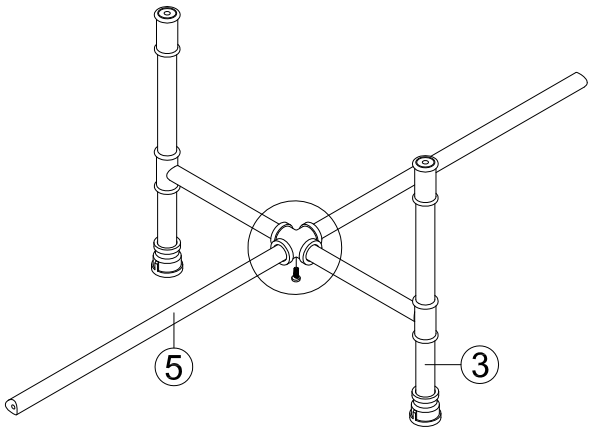

2-1

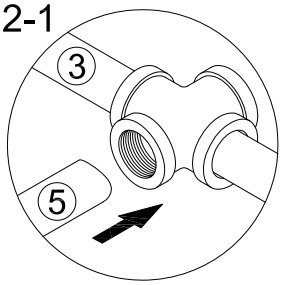

2-2

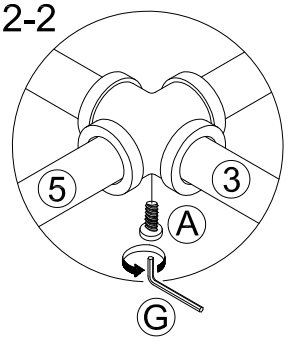

A		1pc

How to Assemble:

STEP 3.

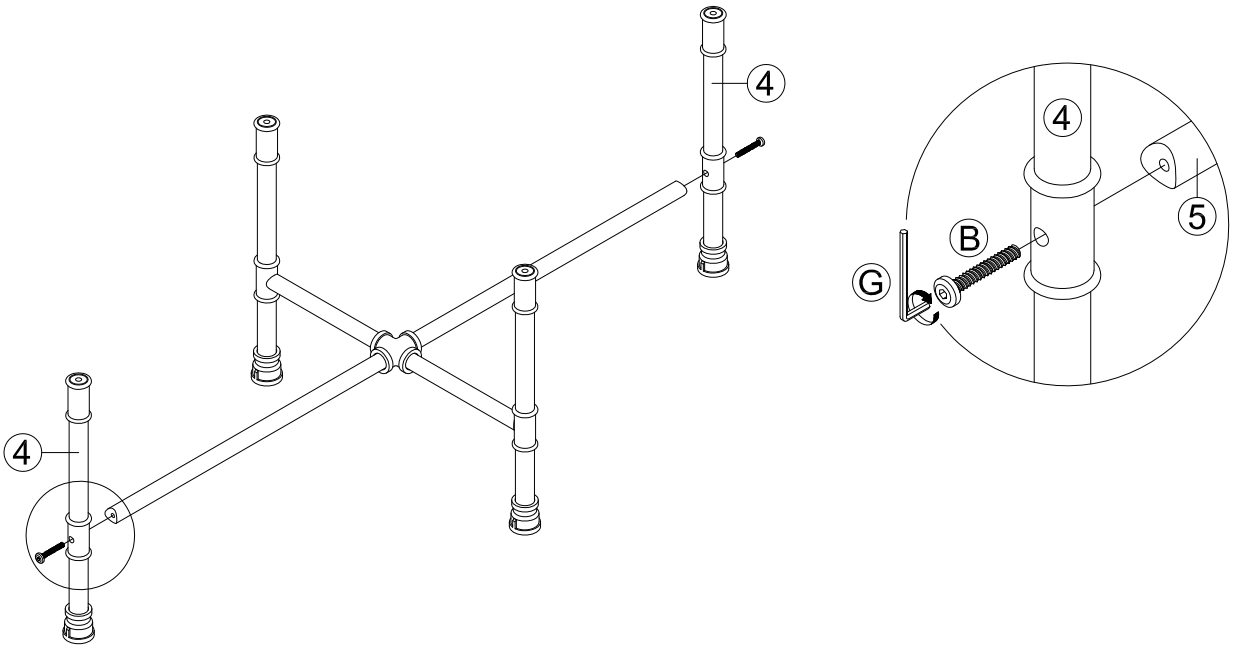

B		2pcs

STEP 4.

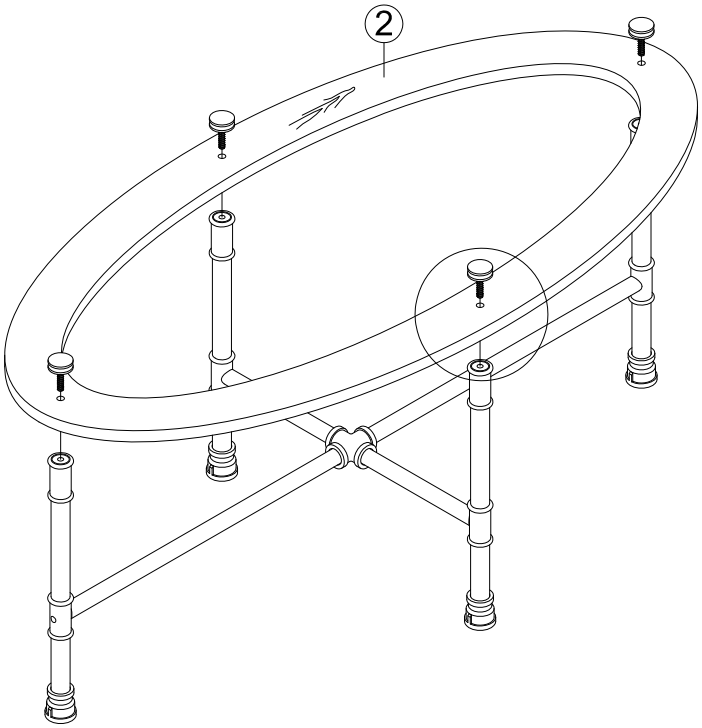

4-1

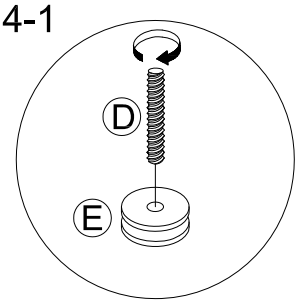

4-2

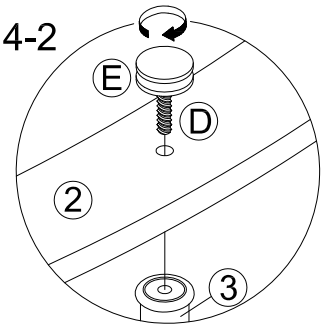

D		4pcs
E		4pcs

How to Assemble:

STEP 5.

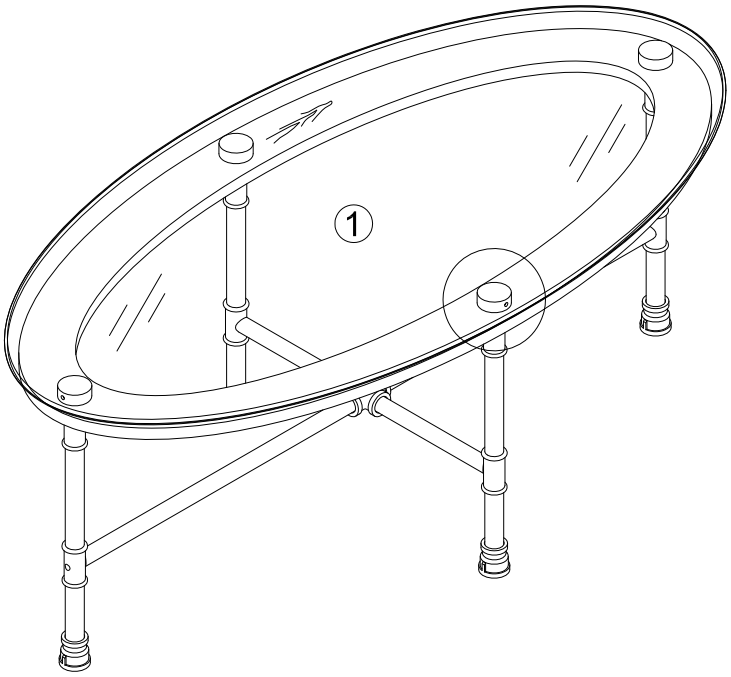

5-1

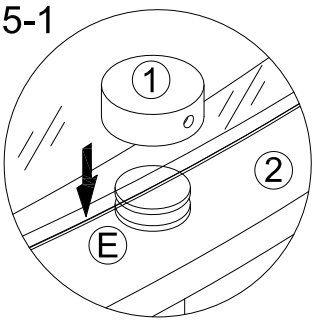

5-2

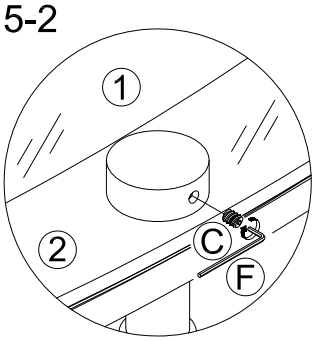

C		4pcs
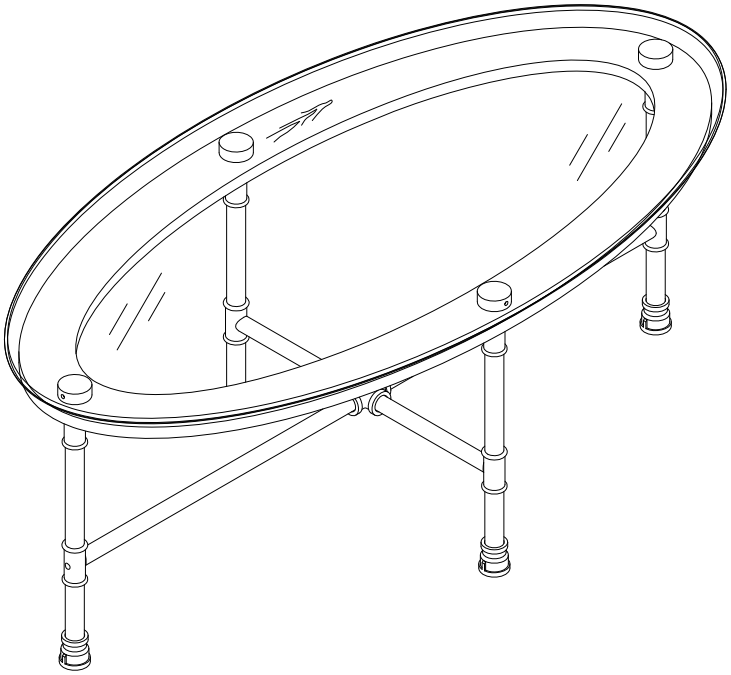
STEP 6.