Assembly Instructions

Caution : You must read this before you proceed

Care & Maintenance

- Not for commercial use. For residential use only.
- Furniture may scratch floors. We recommend using furniture pads to protect your floors.
- Do not put hot items directly on furniture surface.
- Do not clean furniture with harsh cleansers or polish.
- Do not place furniture under direct sunlight.
- Do not place furniture near heating or cooling vents.
- Do not write on furniture without a padded barrier to protect the surface.
- Do not place furniture outside . For indoor use only.
- Stains may be removed with mild soap solution and damp cloth.
- Children should not climb or jump on the furniture.
- Dust and pick-up spills using a clean, non-colored, lint-free cloth.

Please look in carton for hardware packs and legs.
Sets often ship in multiple boxes and may arrive a day or two apart.

Ottoman

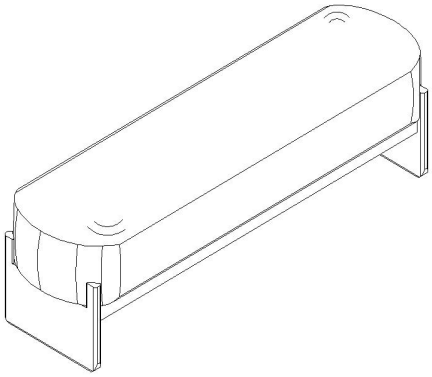

Parts List

Label	Picture	Description	QTY
A	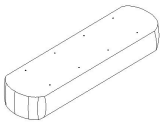	Seat Cushion	1
B		Leg	2
C		Stretcher	2

Hardware

Label	Picture	Description	QTY
①		Wood Dowel Ø8 x 30mm	9
②	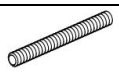	Full Thread Screw Ø5/16"×2-3/4"	5
③		Half Moon Washer 28 x 15 x 6.5mm	5
④		Nut Ø5/16"	5
⑤		Bolt Ø1/4" x 5/8"	17
⑥		L-shaped iron sheet (25*25) x 19 x T1.5mm	8
⑦	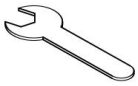	Open wrench L95mm*T2.8mm， open-endØ12mm	1
⑧		Allen Wrench 4.0×21×57	1

Assembly Preparation

Before Beginning Assembly:

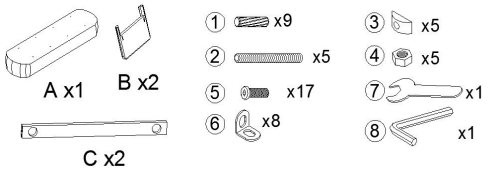

- Read instructions, cover to cover-
- Have 2 adults on hand for assembly-
- Do not assemble on flooring or carpet-
- Assemble on a clean non-marring surface (packing foam)-
- Save all packaging until finished-

Assembly Steps

Overview

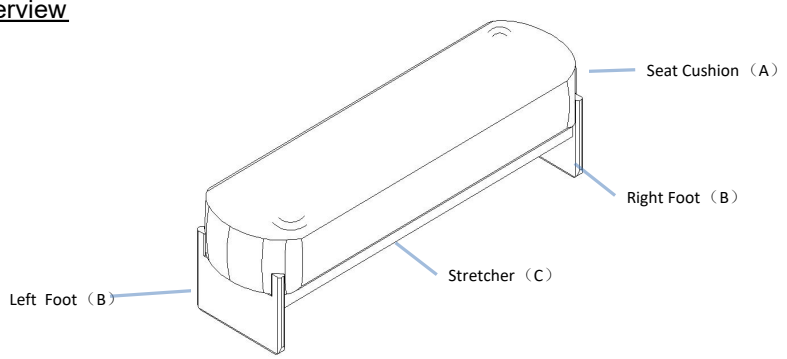

This Chair has multiple parts and may require up to some 30 minutes to assemble. To give you an overview of the Chair parts, the above picture is to help you put the various parts into perspective. Please read through the instructions below to familiarise yourself with the parts and steps before assembly.

Step 1

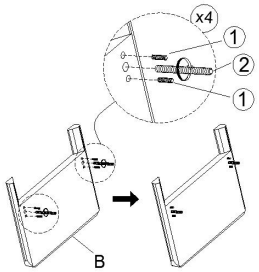

Install the Full Thread Screw (②) and Wood Dowel (①) on the Legs (Bx2),as pictured above.

Step 2

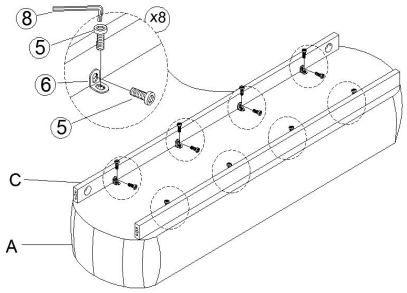

Attached L-shaped iron sheet(⑥) on Seat Cushion(A) and Stretcher(C) by Allen Wrench(8) and Bolt(5) and hold Seat Cushion(A) and Stretcher(C) together,as pictured above.

Step 3

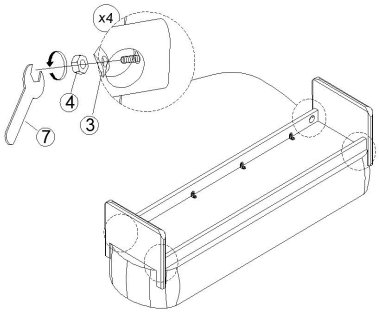

Install the Legs (Bx2) on Seat Cushion (A) by using the Half Moon Washer (③) ,Nut (④) and Open wrench (⑦) ,as pictured above.

Step 4

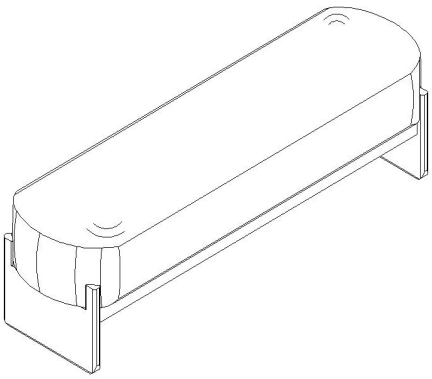

Your Chair is ready for use.
This Chair can only be used on a flat, level surface.