ASSEMBLY INSTRUCTION

At least 2 people are required for product assembly

STEP 1

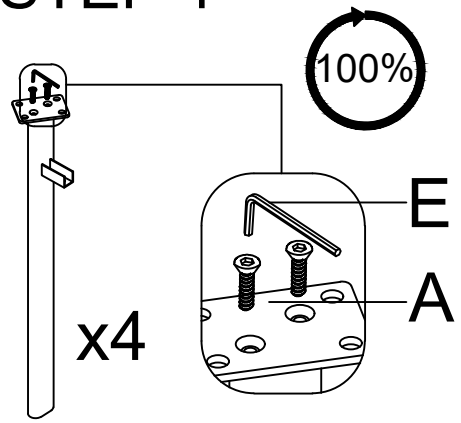

STEP 2

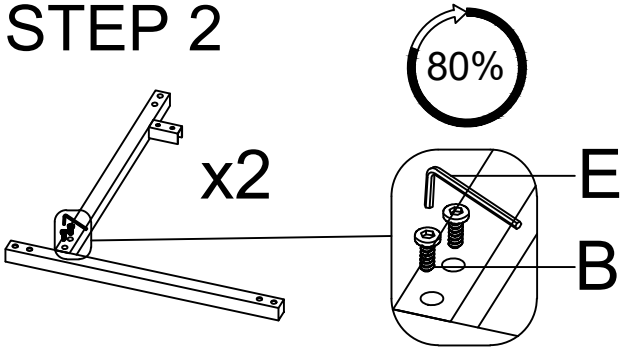

STEP 3

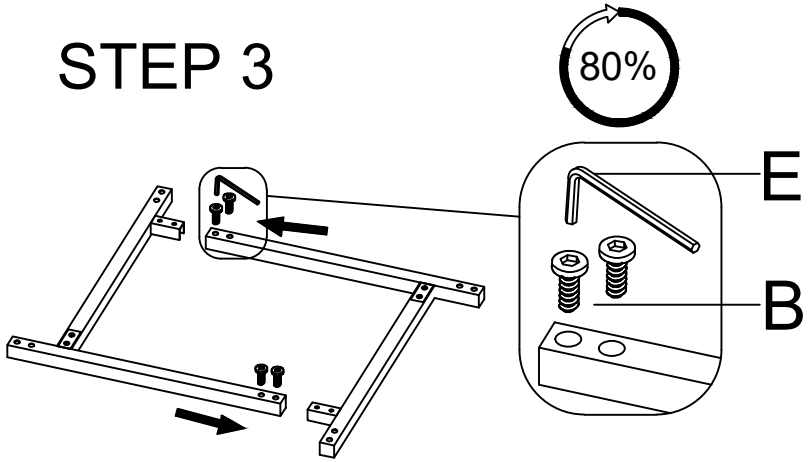

STEP 4

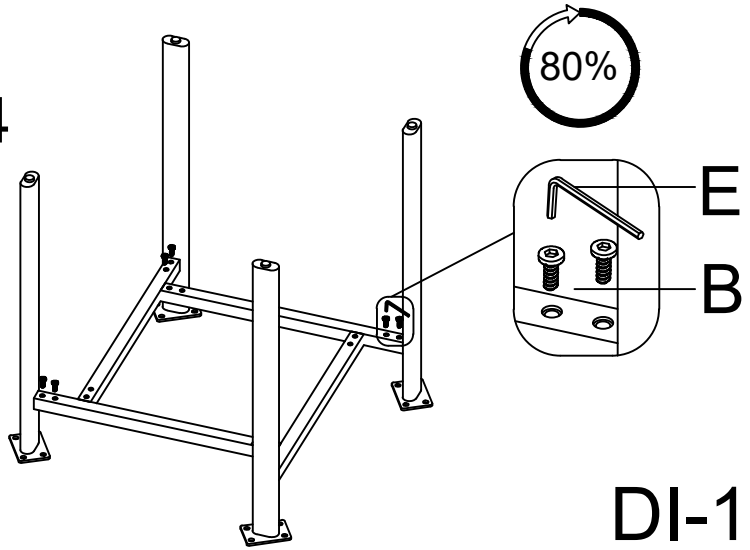

DI-131-3

A M8*25mm 8pcs	B M8*10mm 16pcs	C ϕ 16*1.5mm 16pcs	D M8*25mm 16pcs	E M5 1pc	F ϕ 8*40mm 4pcs
G ϕ 22*15*5mm 4pcs					

ASSEMBLY INSTRUCTION

At least 2 people are required for product assembly

STEP 5

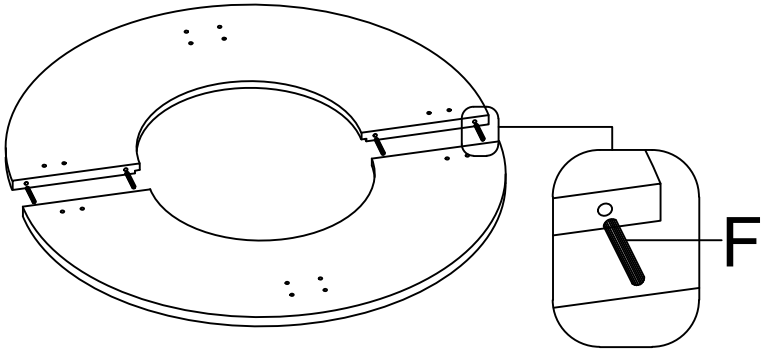

STEP 6

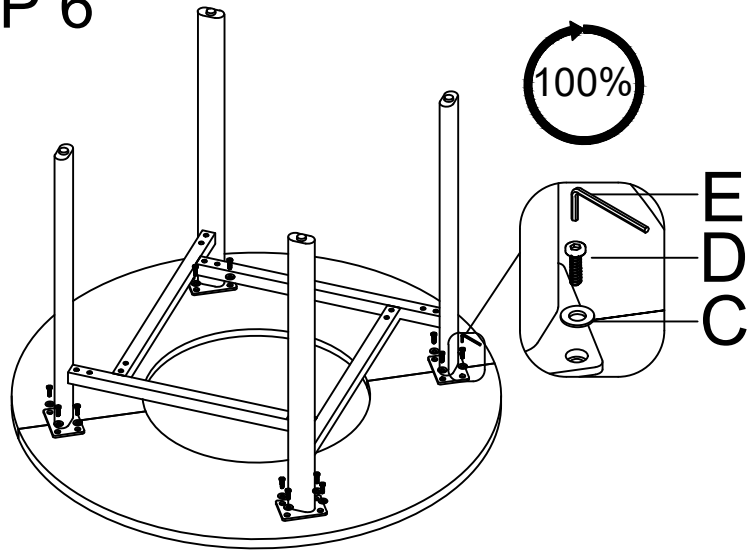

All screws need to be tightened 100%

STEP 7

