86026 Product Installation Instructions

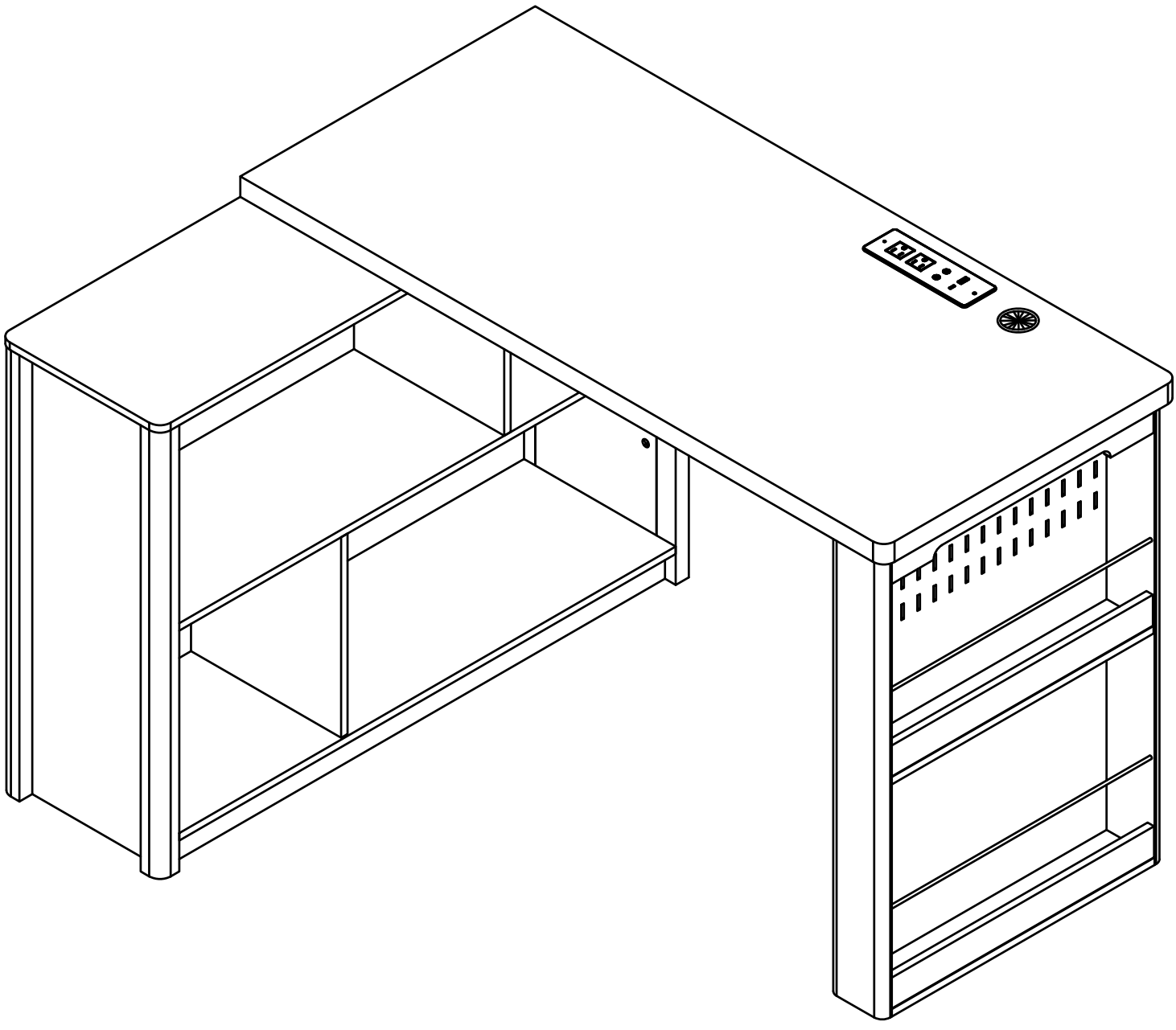

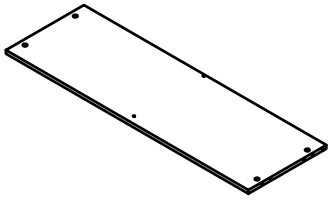

1x1

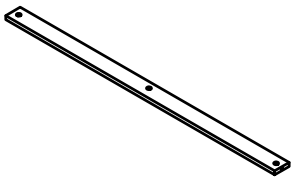

2x2

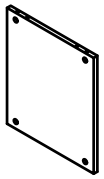

3x2

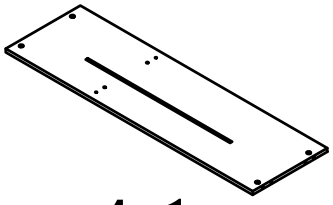

4x1

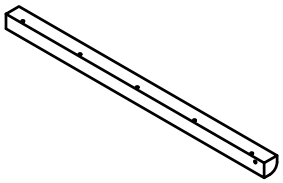

5x1

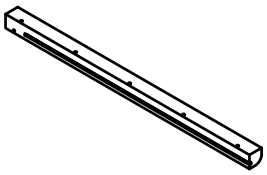

6x1

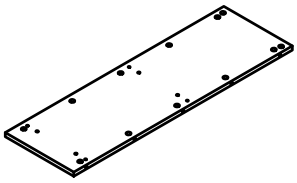

7x2

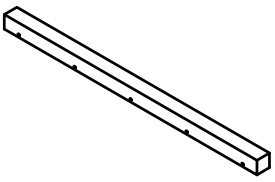

8x1

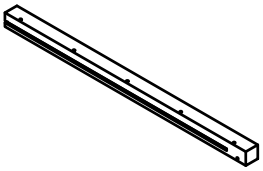

9x1

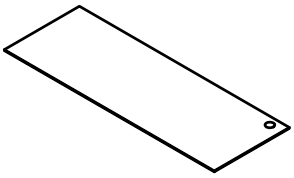

10x2

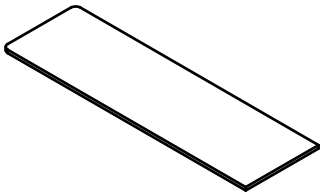

11x1

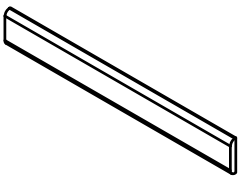

12x1

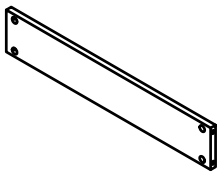

13x1

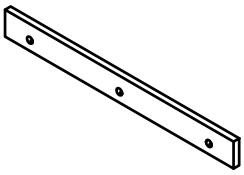

14x2

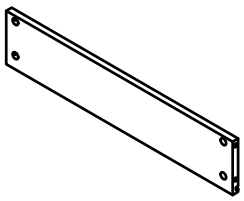

15x1

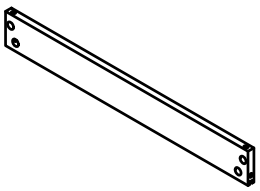

16x1

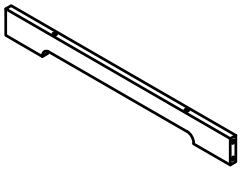

17x1

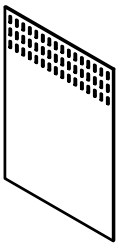

18x1

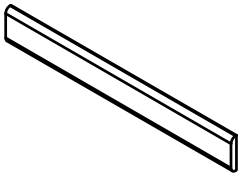

19x1

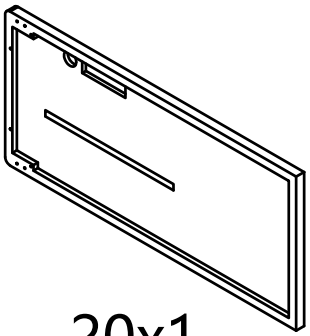

20x1

1

Accessories list

A	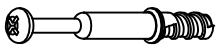	Two In One Screw (6x28mm)	64pcs +6pcs
B		Two In One Nut (10x12mm)	64pcs +6pcs
C	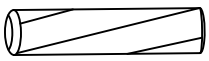	Wood Chipping (6x30mm)	26pcs +4pcs
D		Fixing clip & screw (3x16mm)	8pcs +2pcs
E		Foot nail	3pcs +1pcs
F	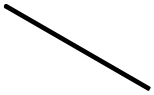	Iron wire(508-cm)	2pcs
G		Non-slip square pad	10pcs +2pcs
H		Non-slip round pad	4pcs +1pcs
I		Screw (6x18mm)	2pcs +1pcs
J		Wire cover	1pcs
K		Wire Clamp	2pcs +1pcs
L	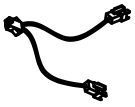	1 bis 2 power extension cable	1pcs
M	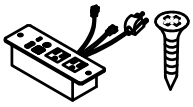	Power Socket & Screw (3x10mm)	1pcs / 2pcs +1pcs
N		Anti inverted right angle grommet Screw(3.5x14mm)	2pcs
		Screw(4*45mm) grommet Countersunk head tapping	2pcs

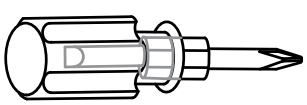

1pcs

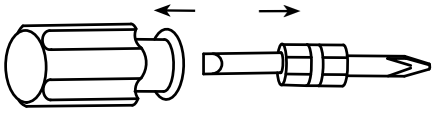

Double-head screwdriver, use as required

Product structure decomposition

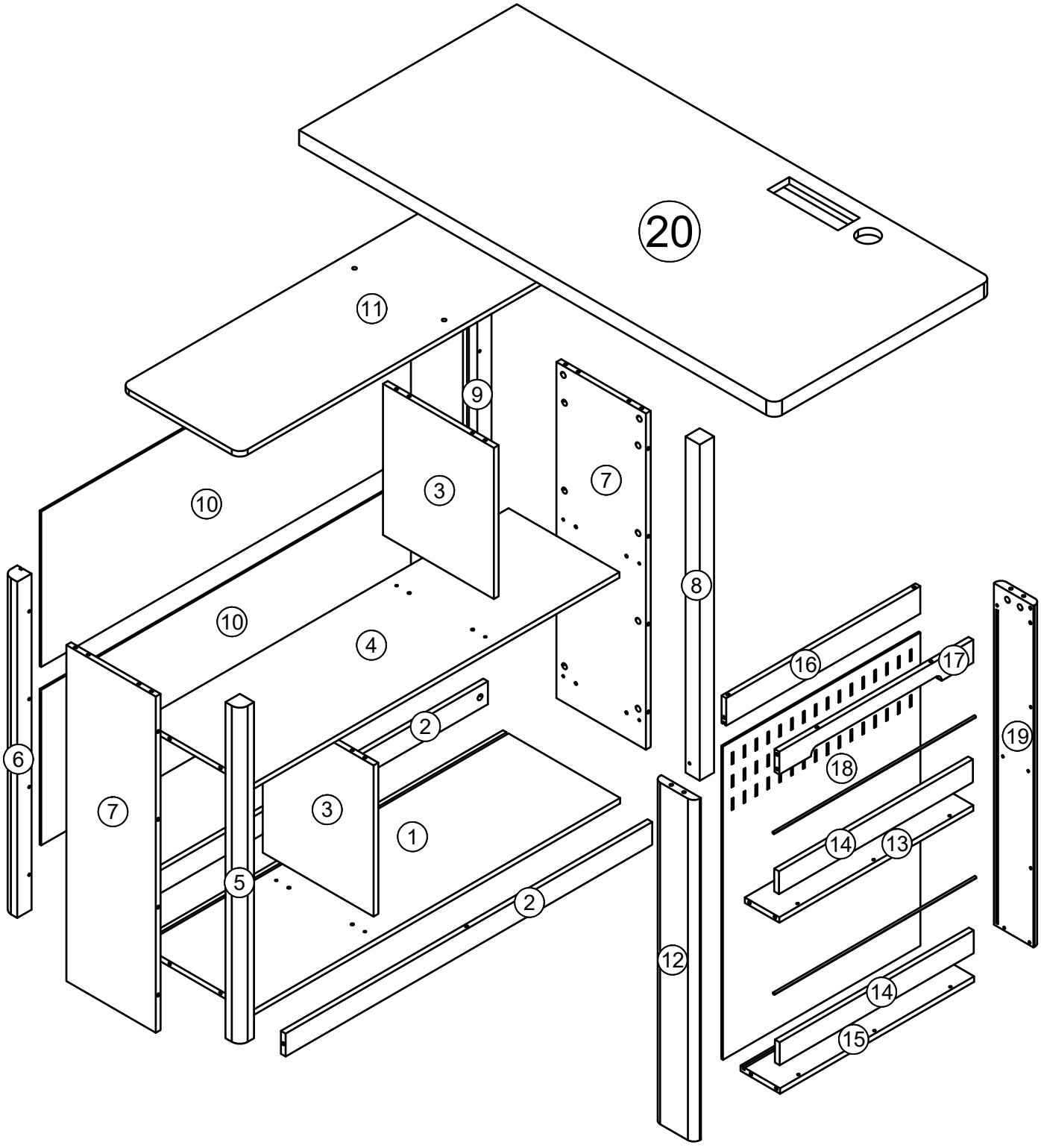

A	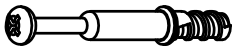	42pcs	B		42pcs
C		20pcs	D		8pcs
E		3pcs	G		6pcs
H		4pcs			

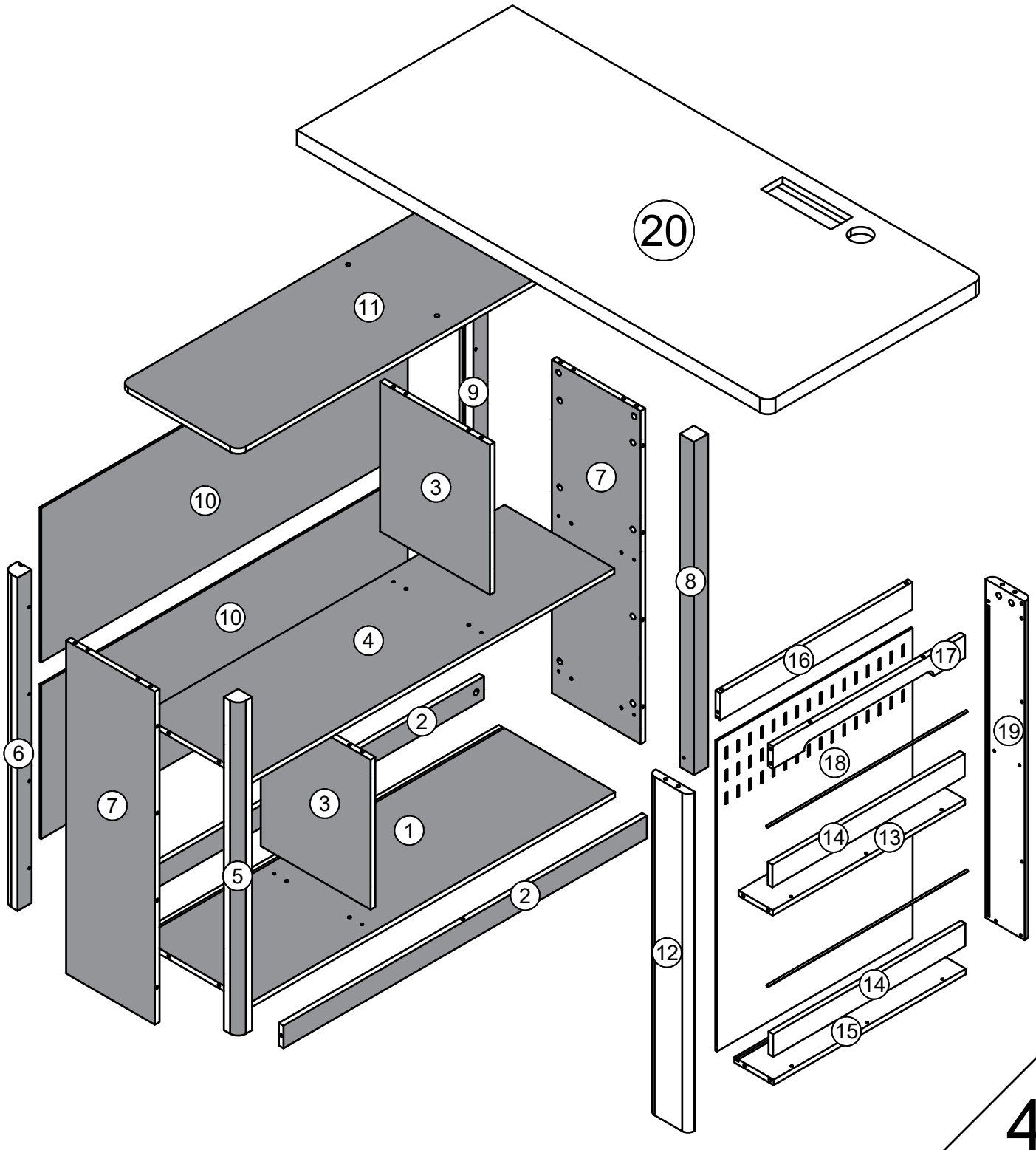

Use parts Ⓐ and Ⓑ

Step1

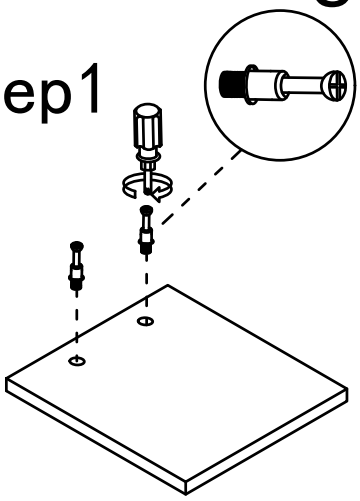

Step2

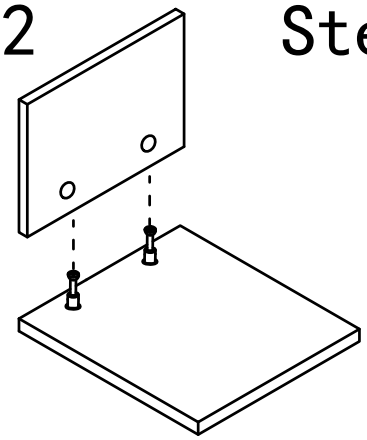

Step3

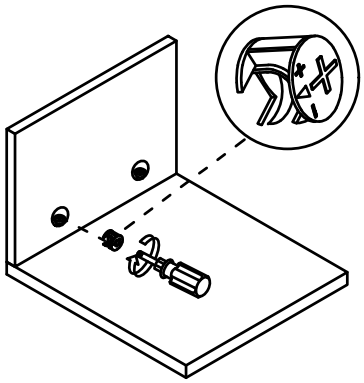

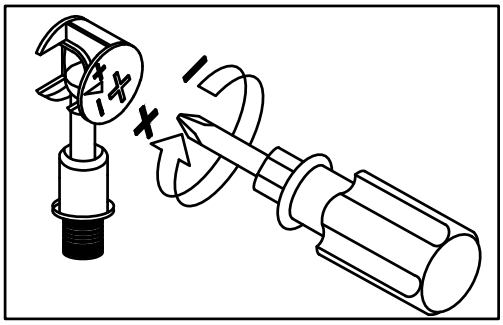

Use a screwdriver to lock in the direction of the "+" sign

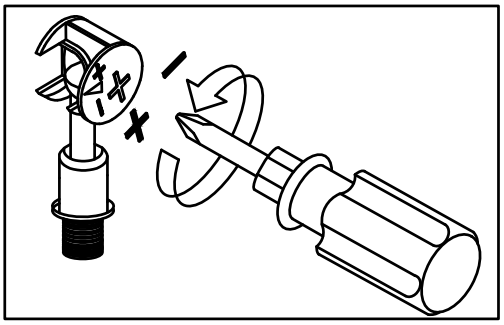

Disassemble along the direction of "-" sign

Step 1

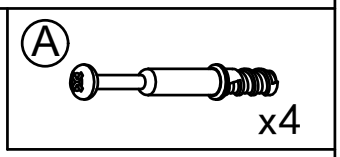

Step 2

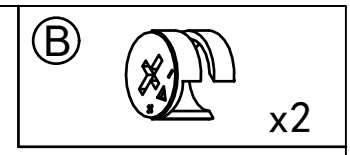

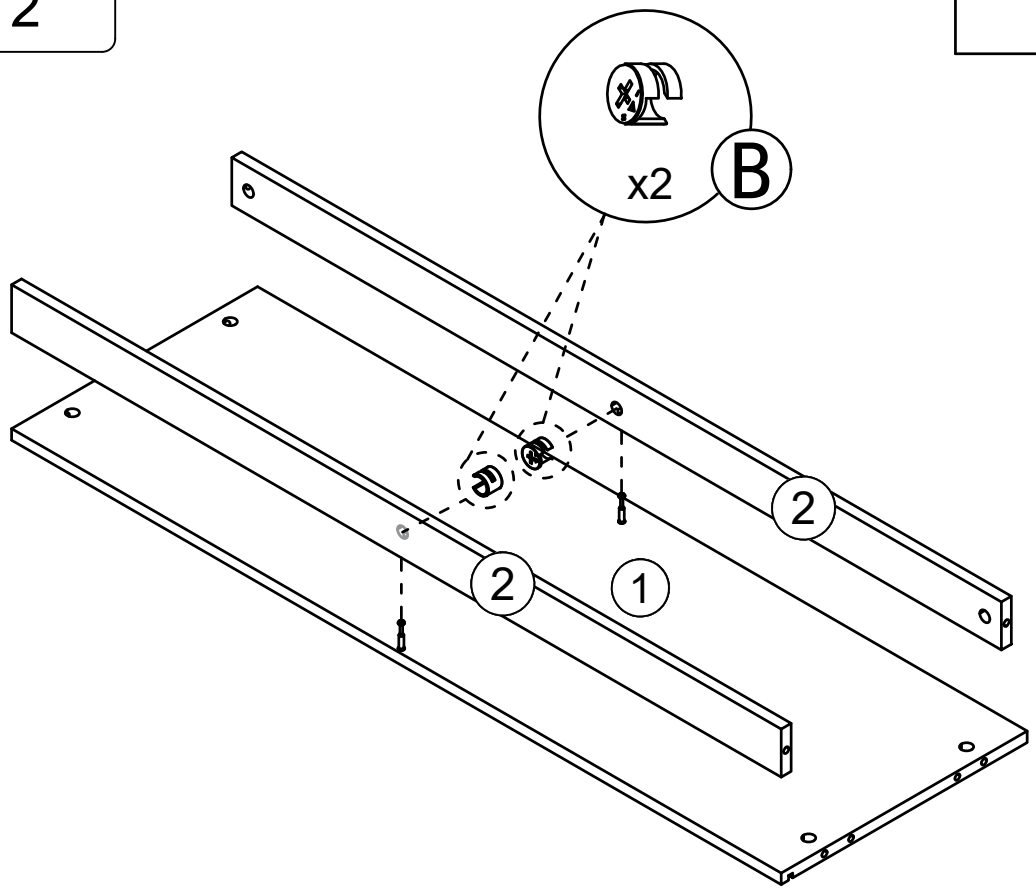

Step 3

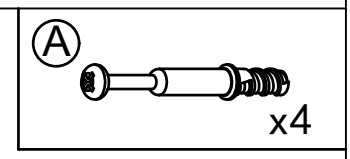

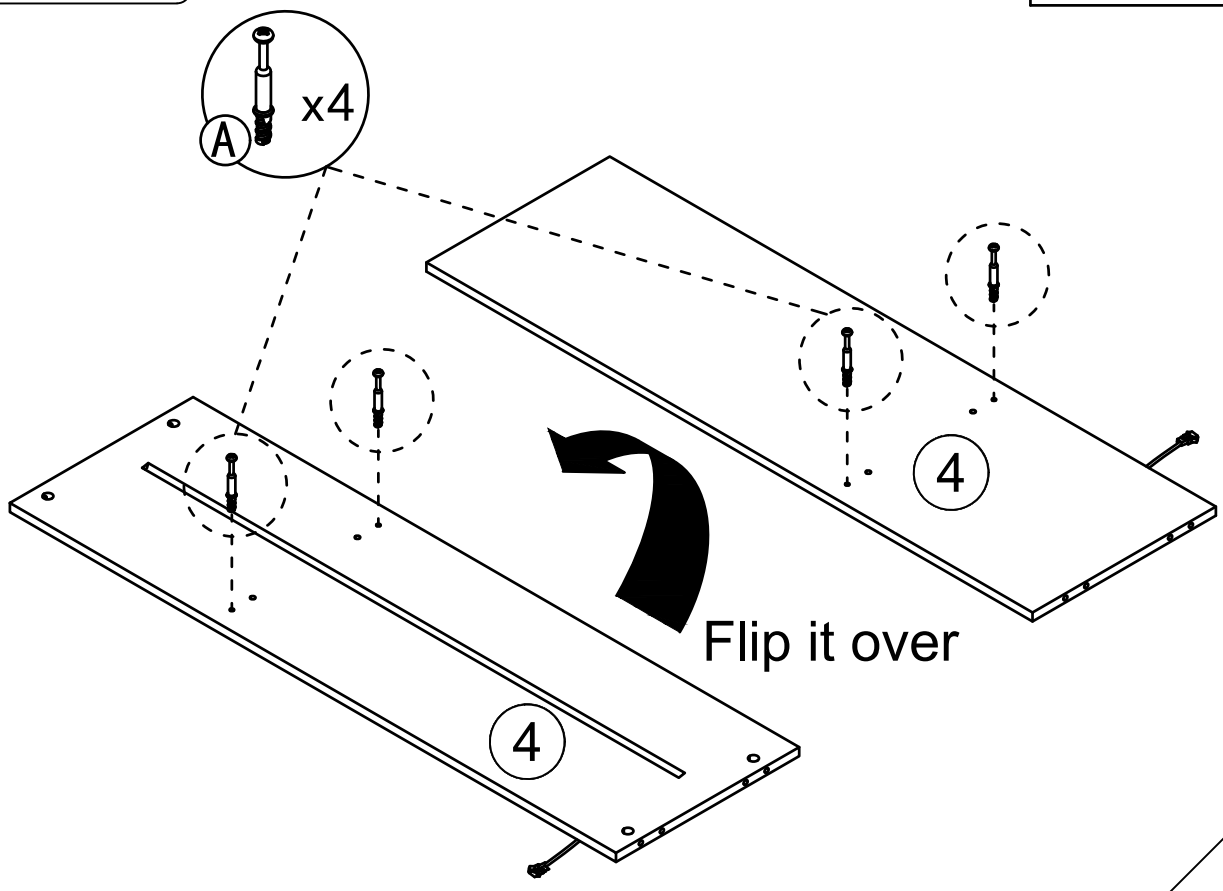

Step 4

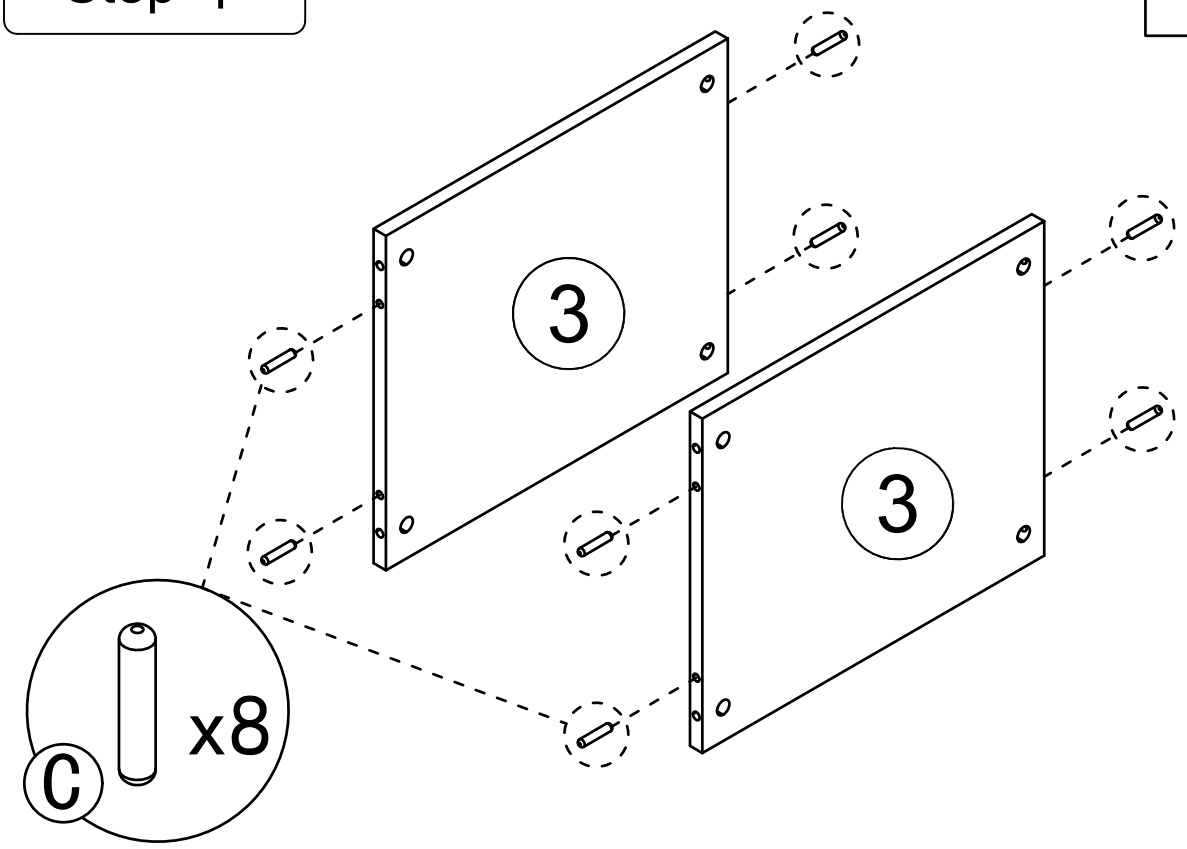

Ⓒ x8

Step 5

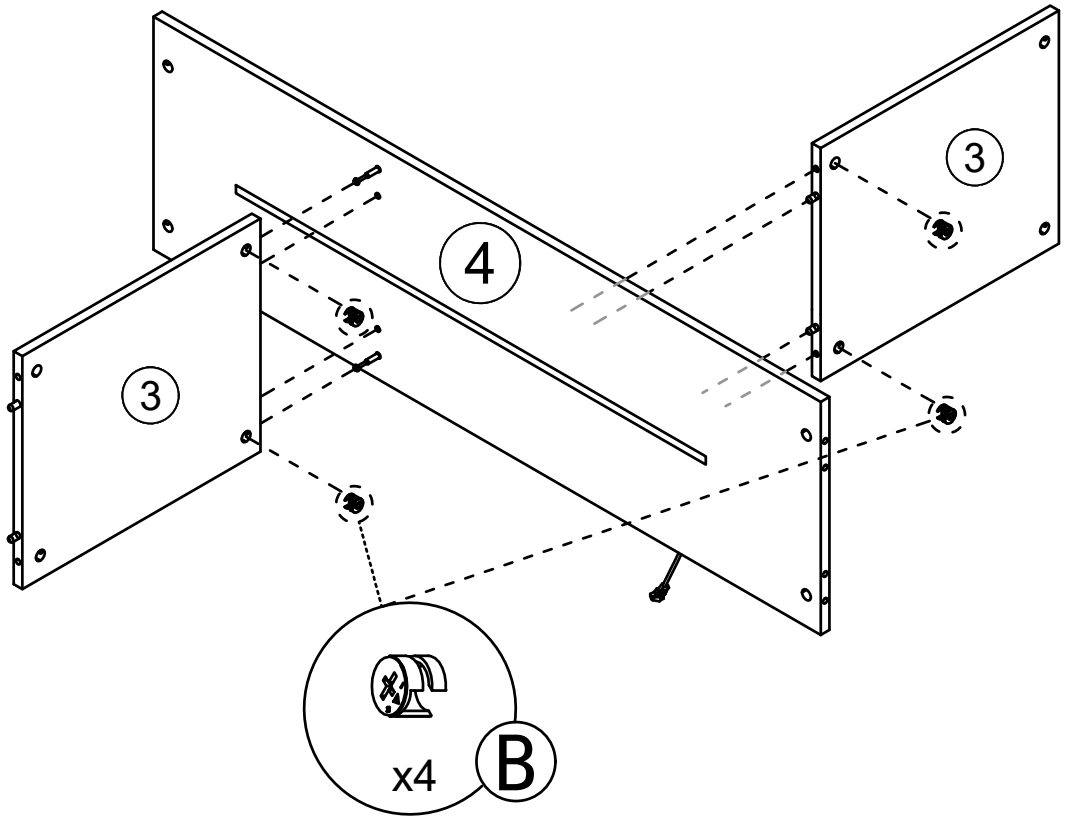

Ⓑ x4

Step 6

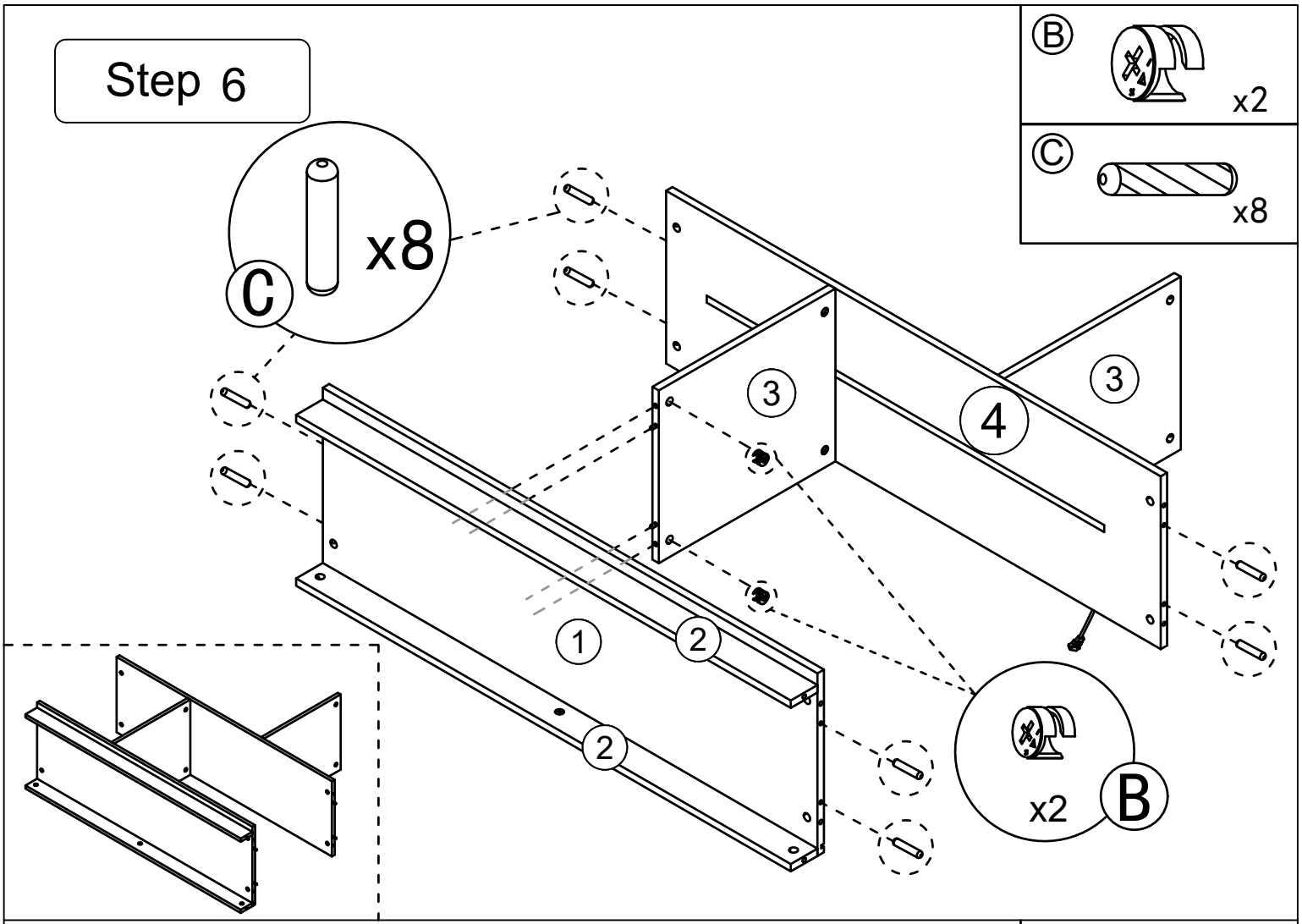

Step 7

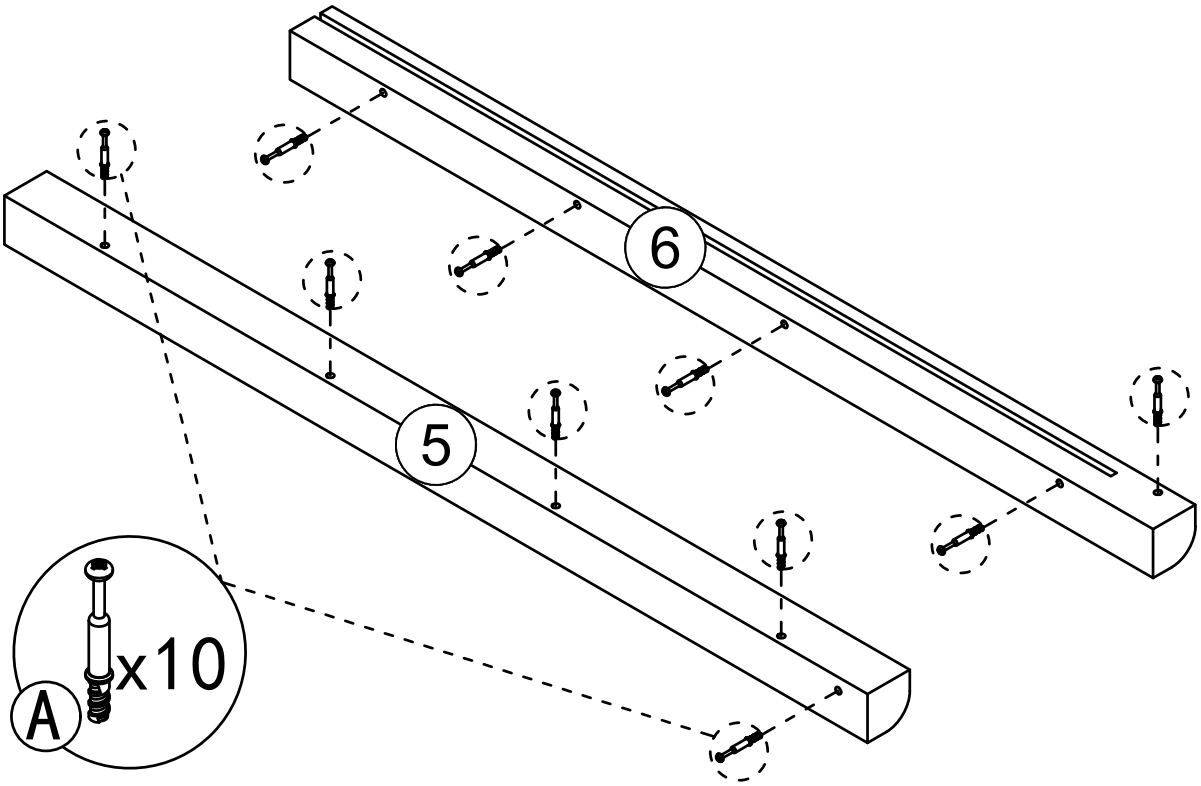

Step 8

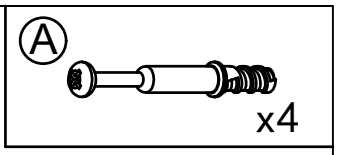

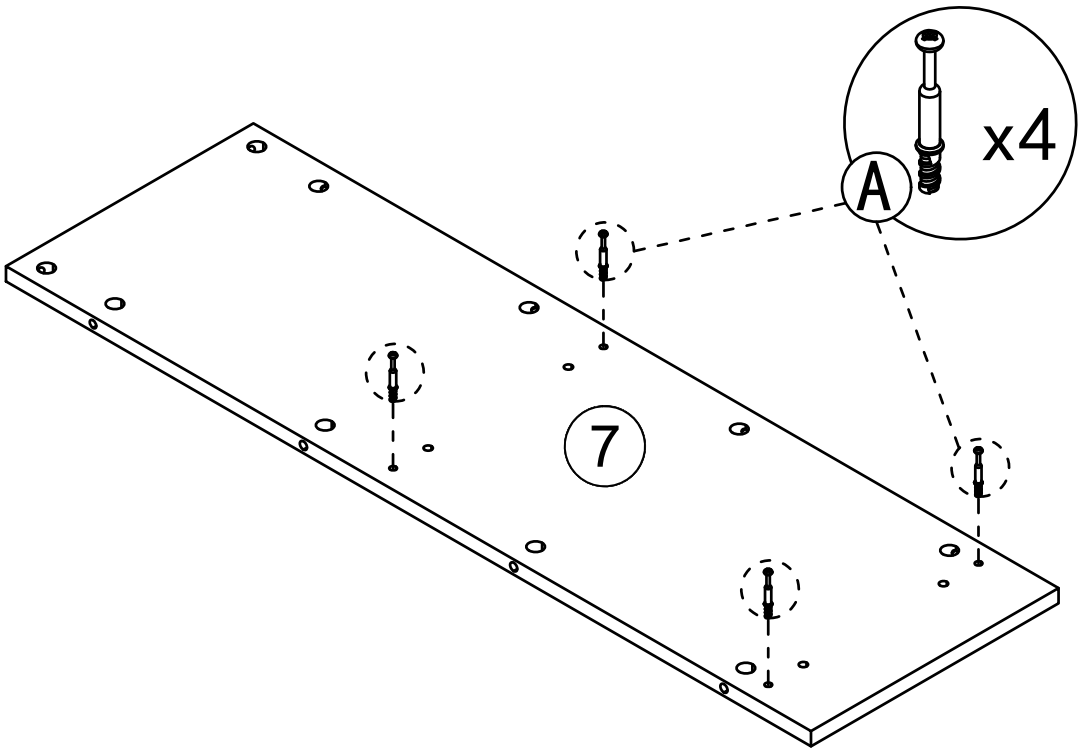

Step 9

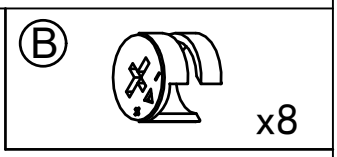

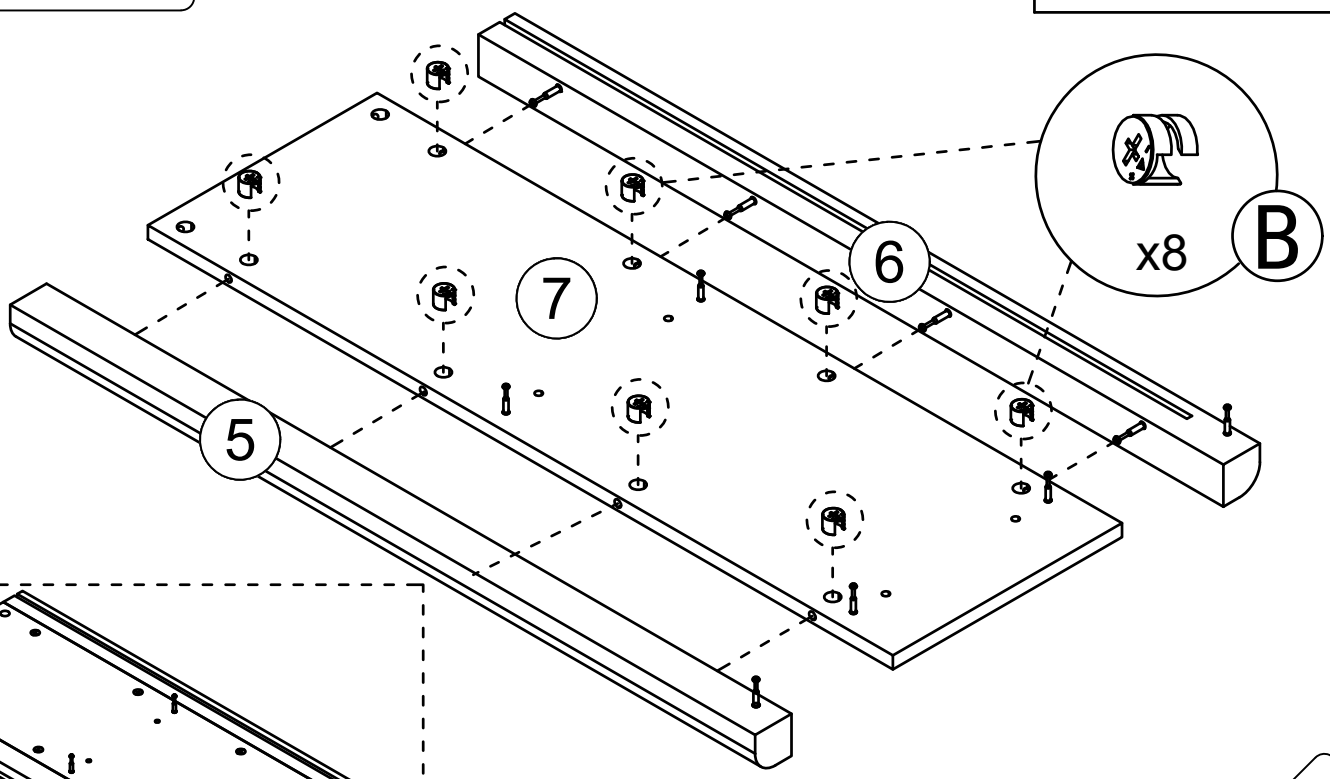

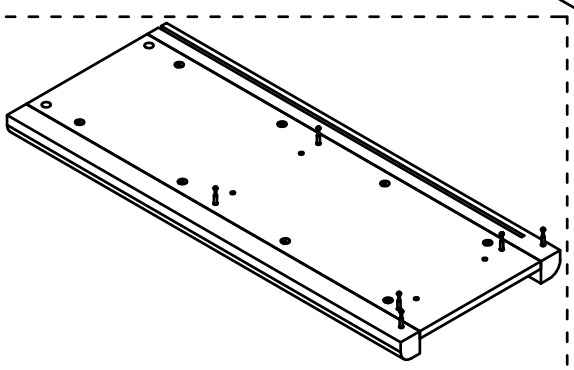

Step 10

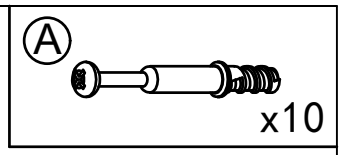

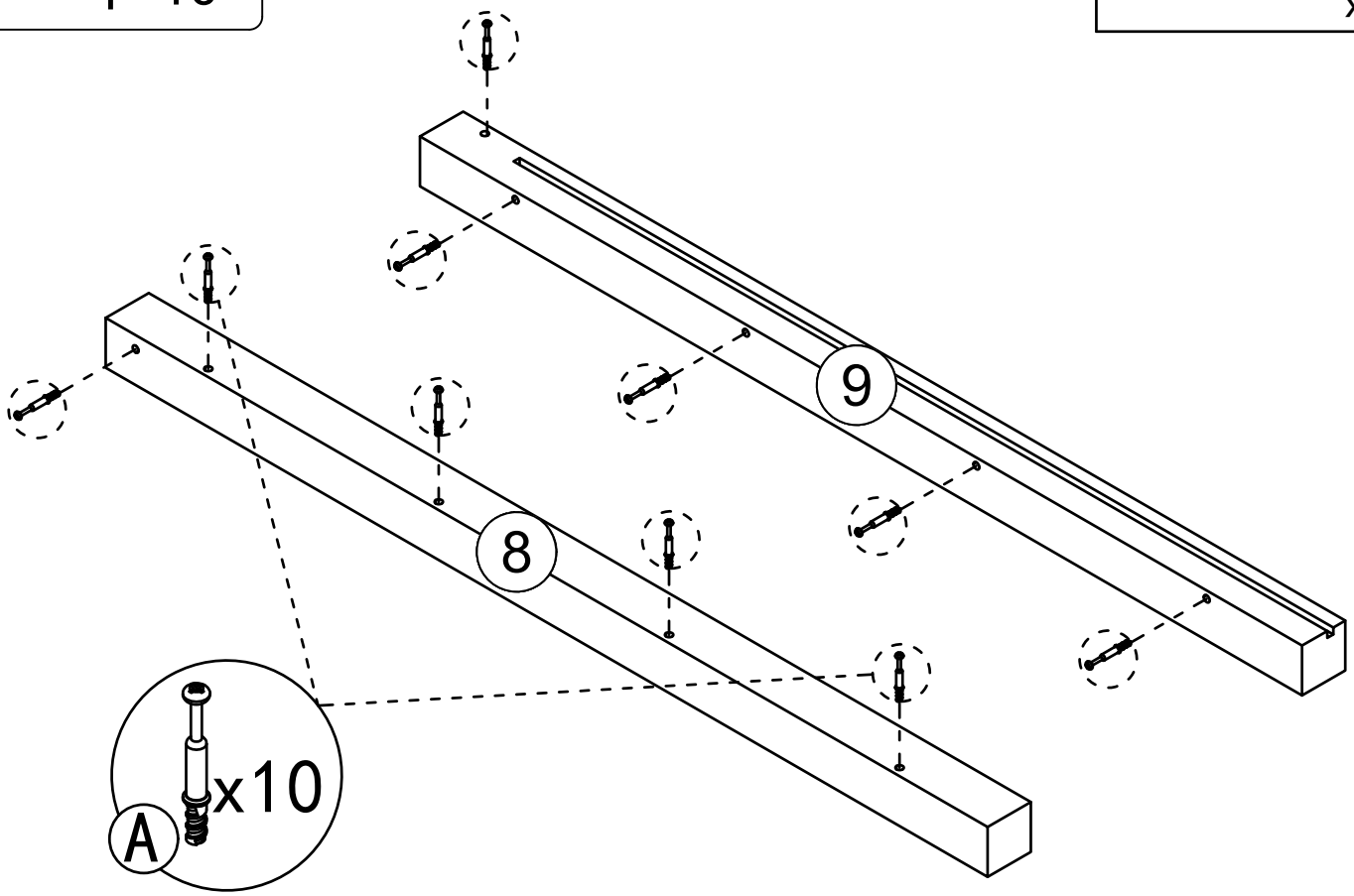

Step 11

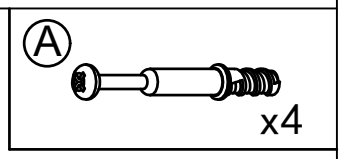

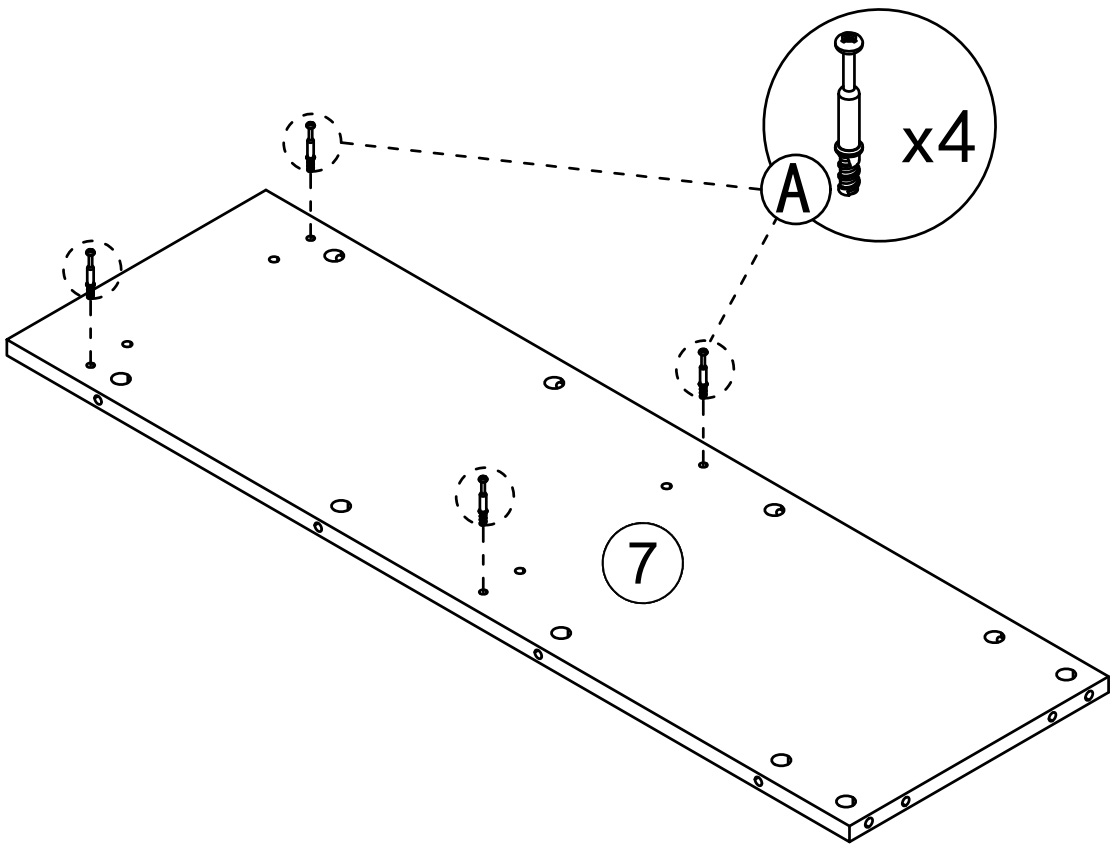

Step 12

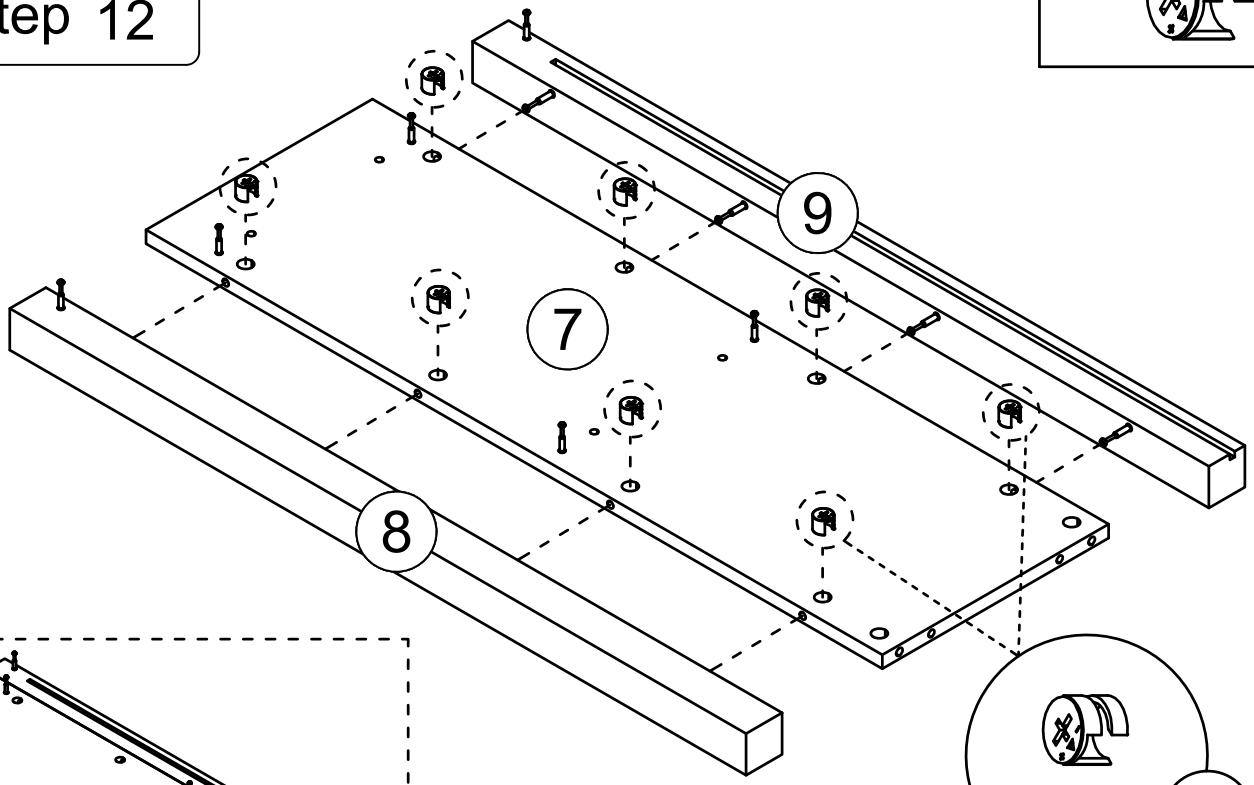

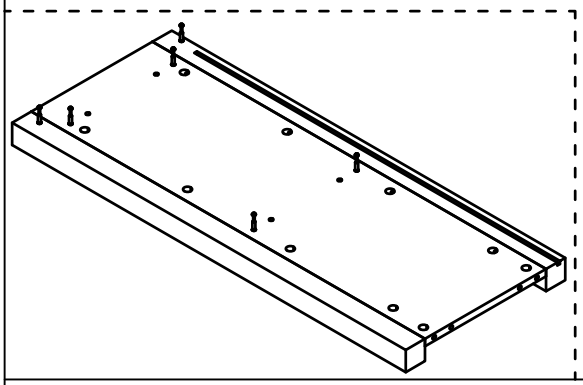

Ⓑ x8

Step 13

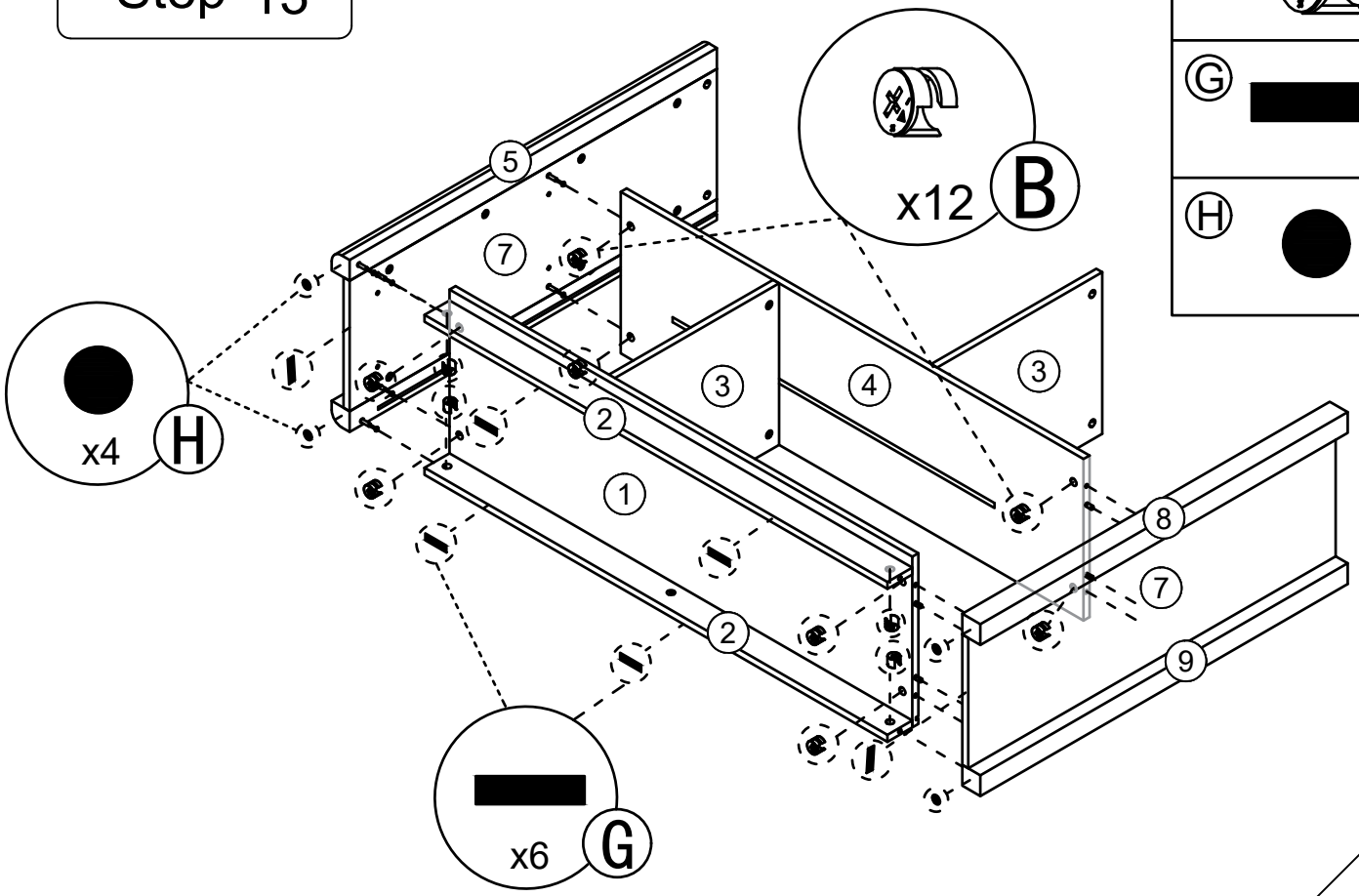

Ⓑ x12

Ⓖ x6

Ⓗ x4

Step 14

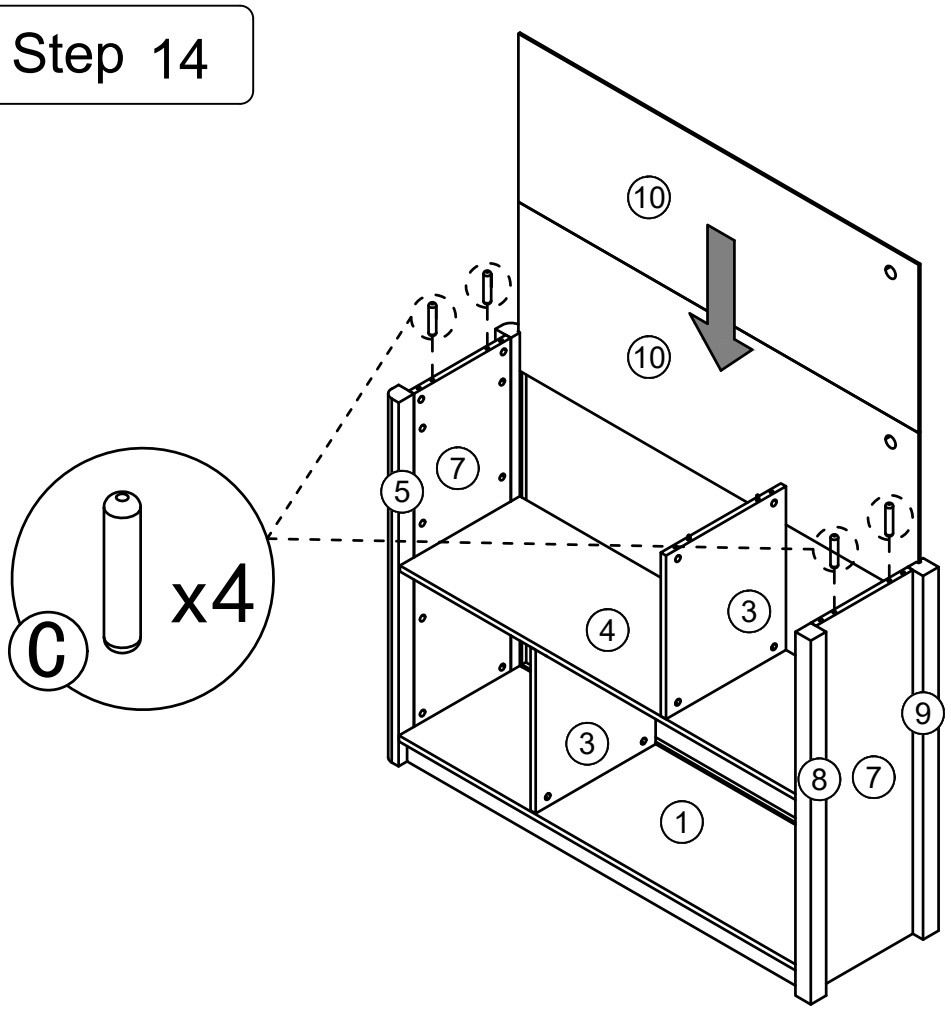

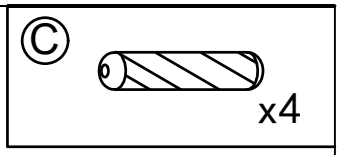

Step 15

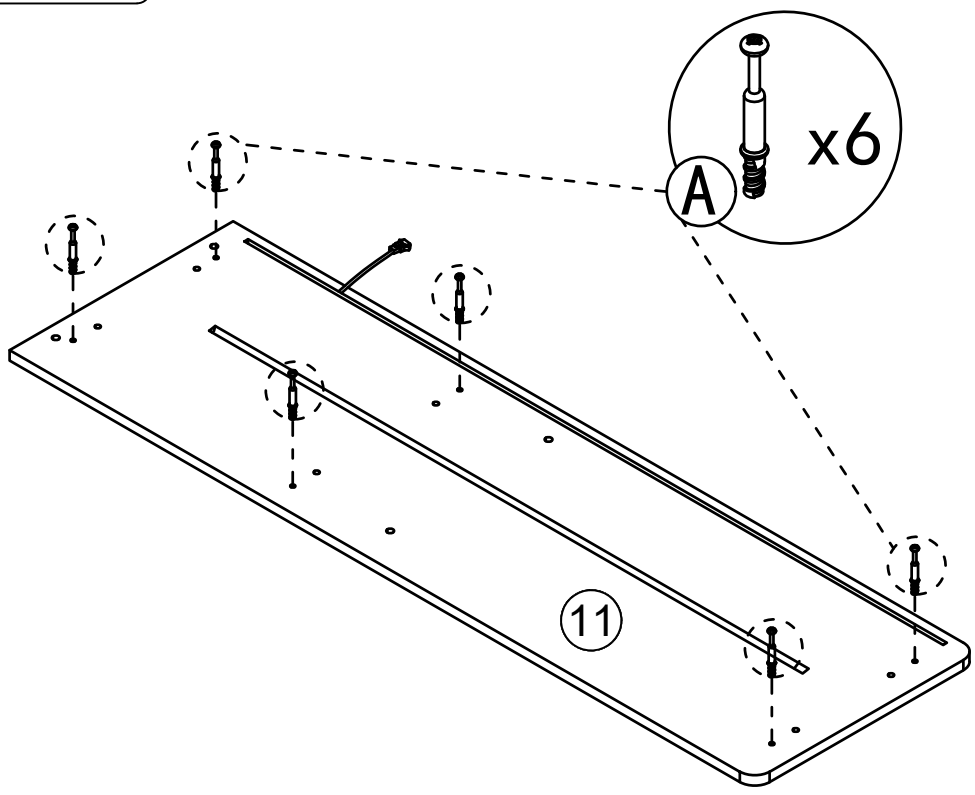

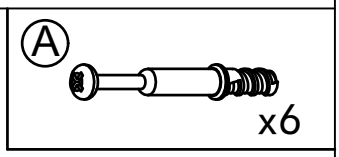

Step 16

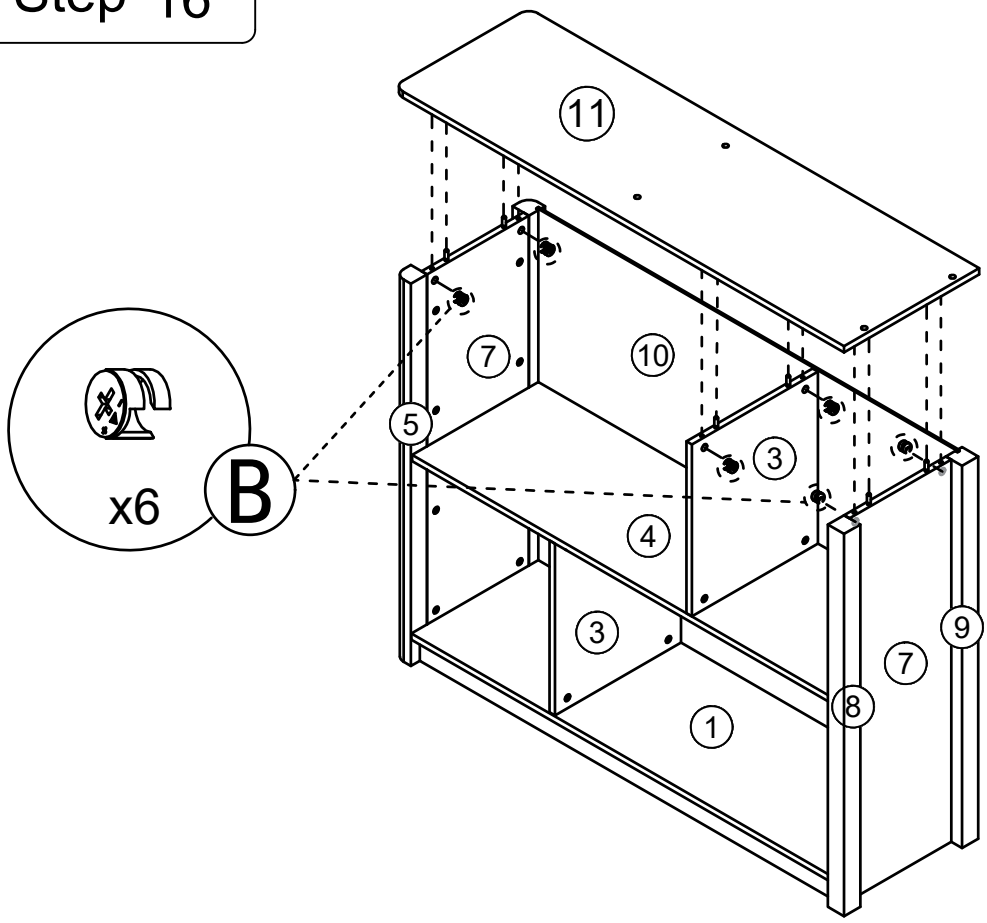

B x6

Step 17

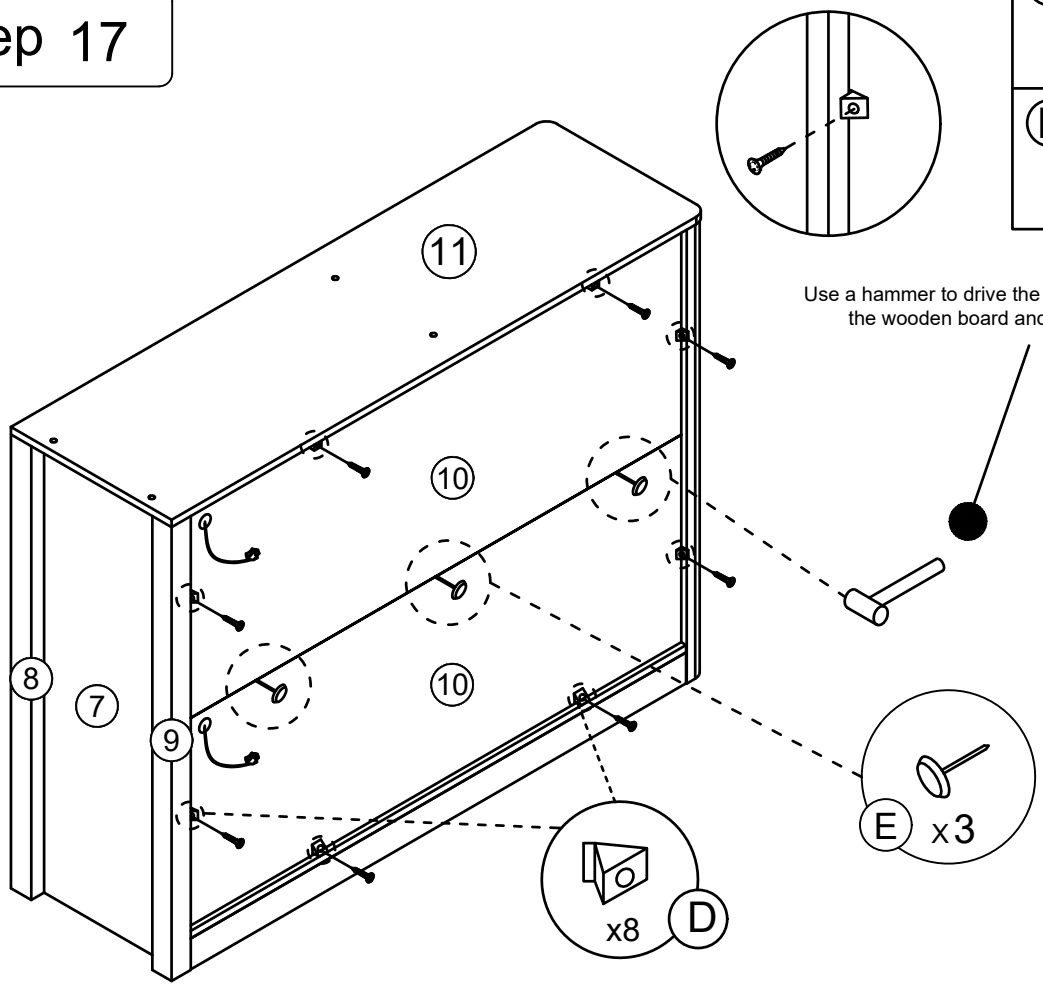

D x8

E x3

Use a hammer to drive the nail into the gap of the wooden board and fix the back board

A	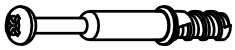	22pcs	B		22pcs
C		6pcs	F	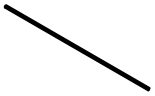	2pcs
G		4pcs	I		2pcs
J		1pcs	K		2pcs
L	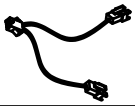	1pcs	M	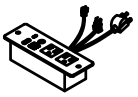 1pcs	 2pcs
N					2pcs

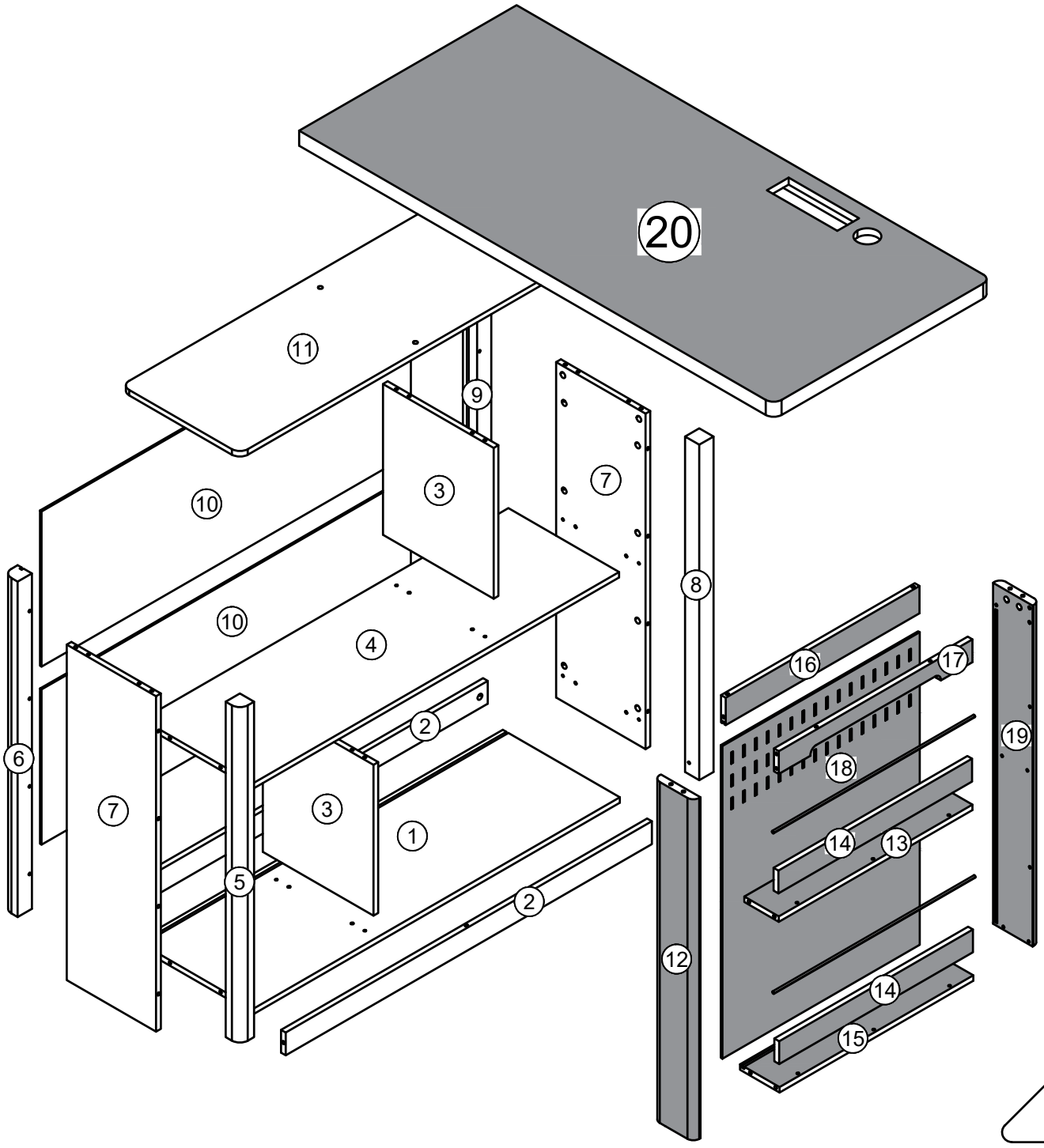

Step 18

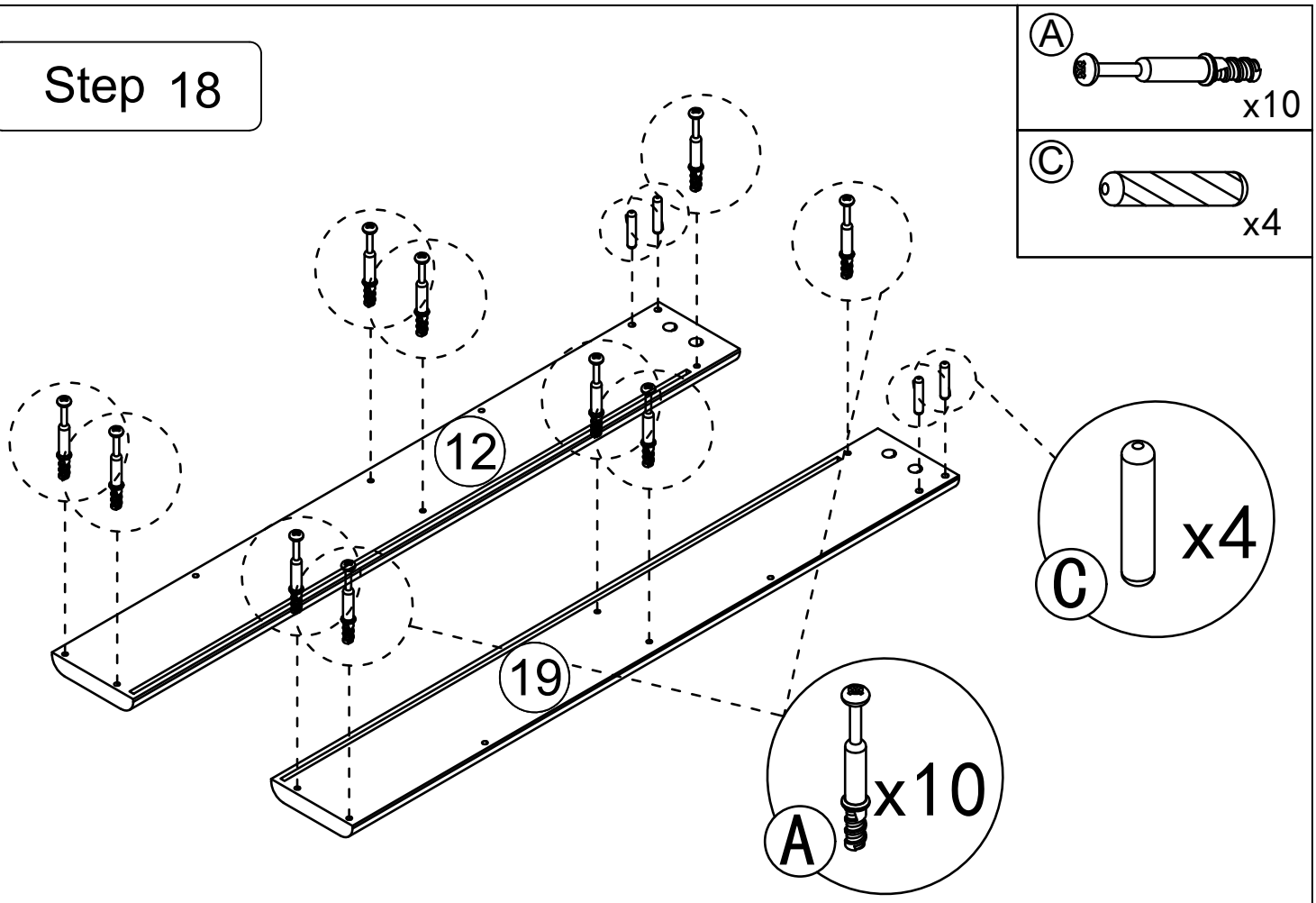

Step 19

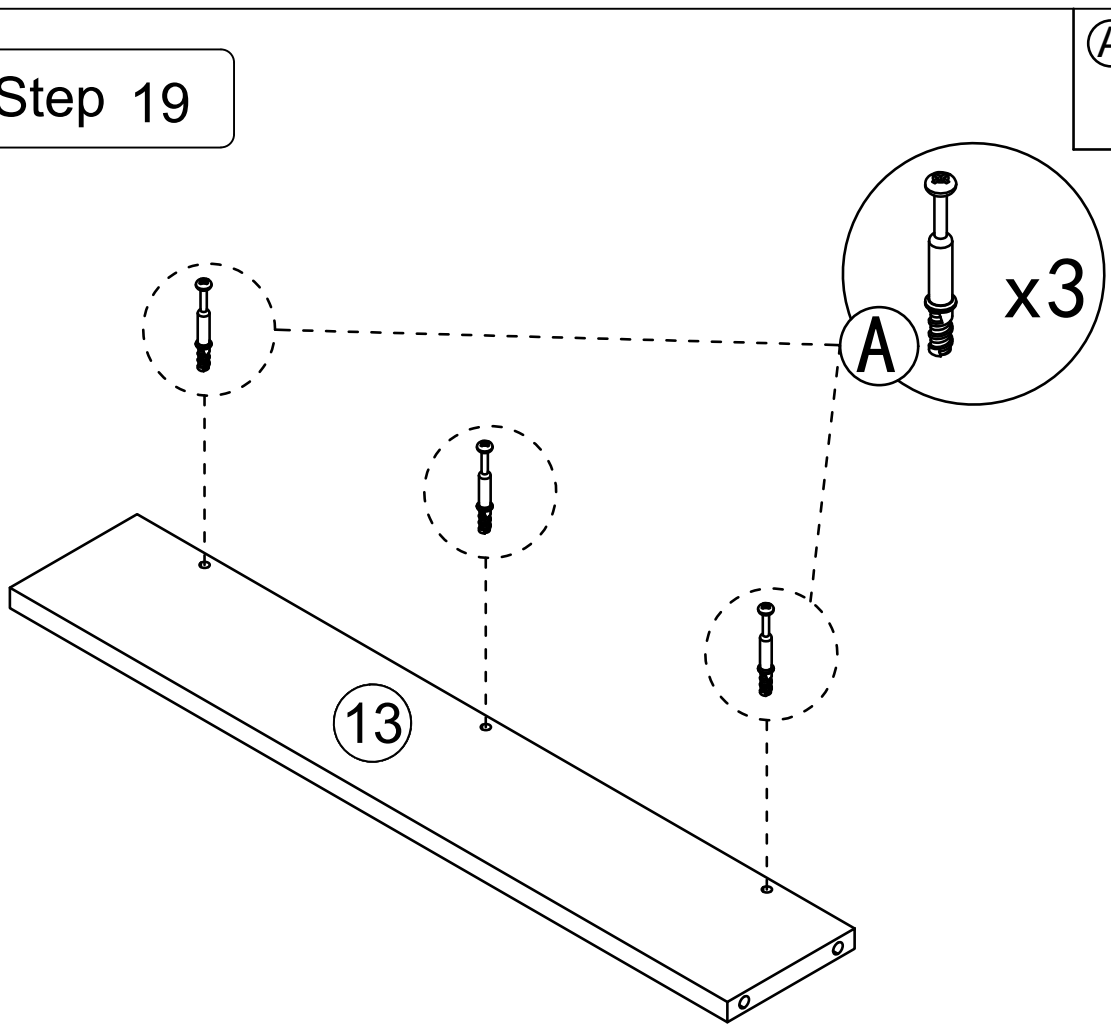

Step 20

Ⓑ x3

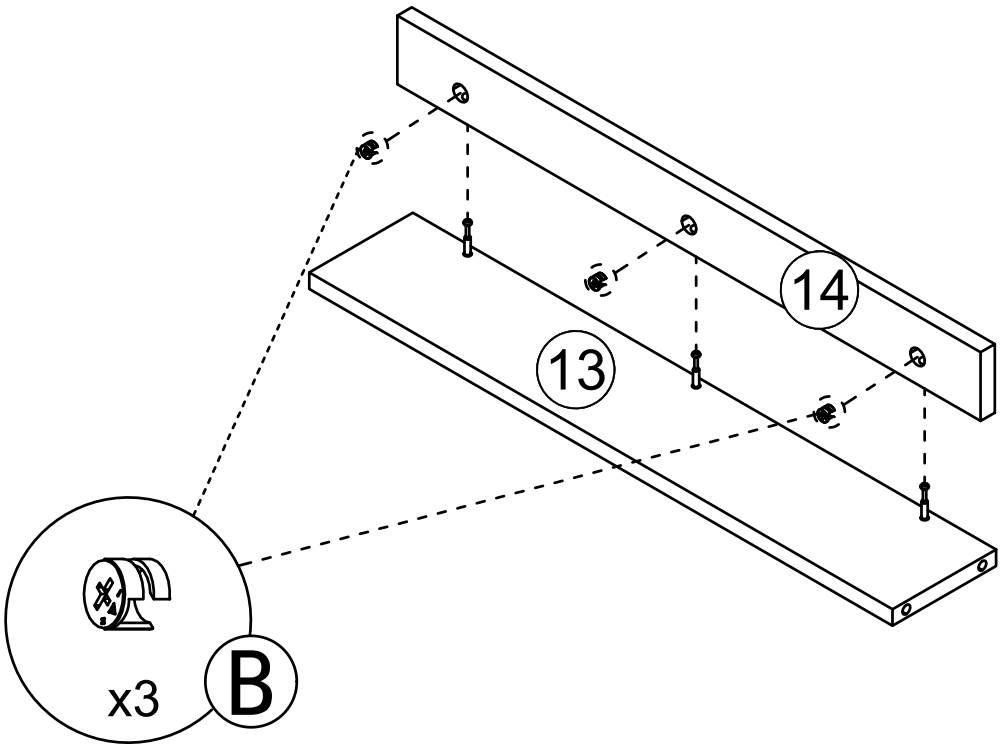

Step 21

Ⓐ x3

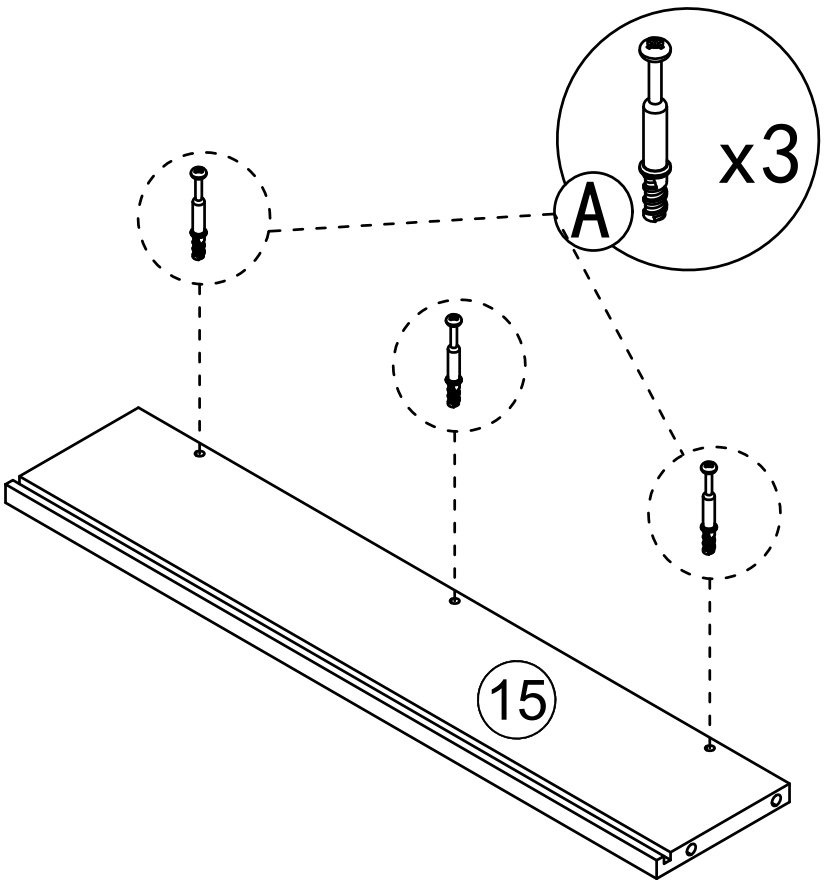

Step 22

Ⓑ x3

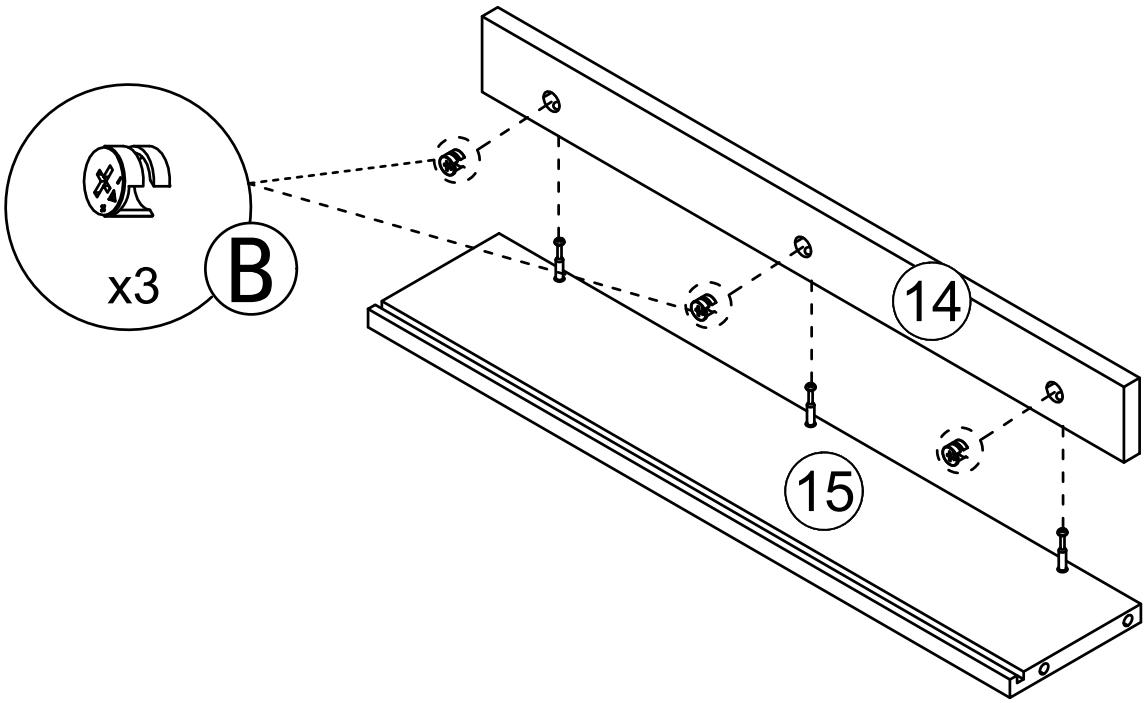

Step 23

Ⓑ x5

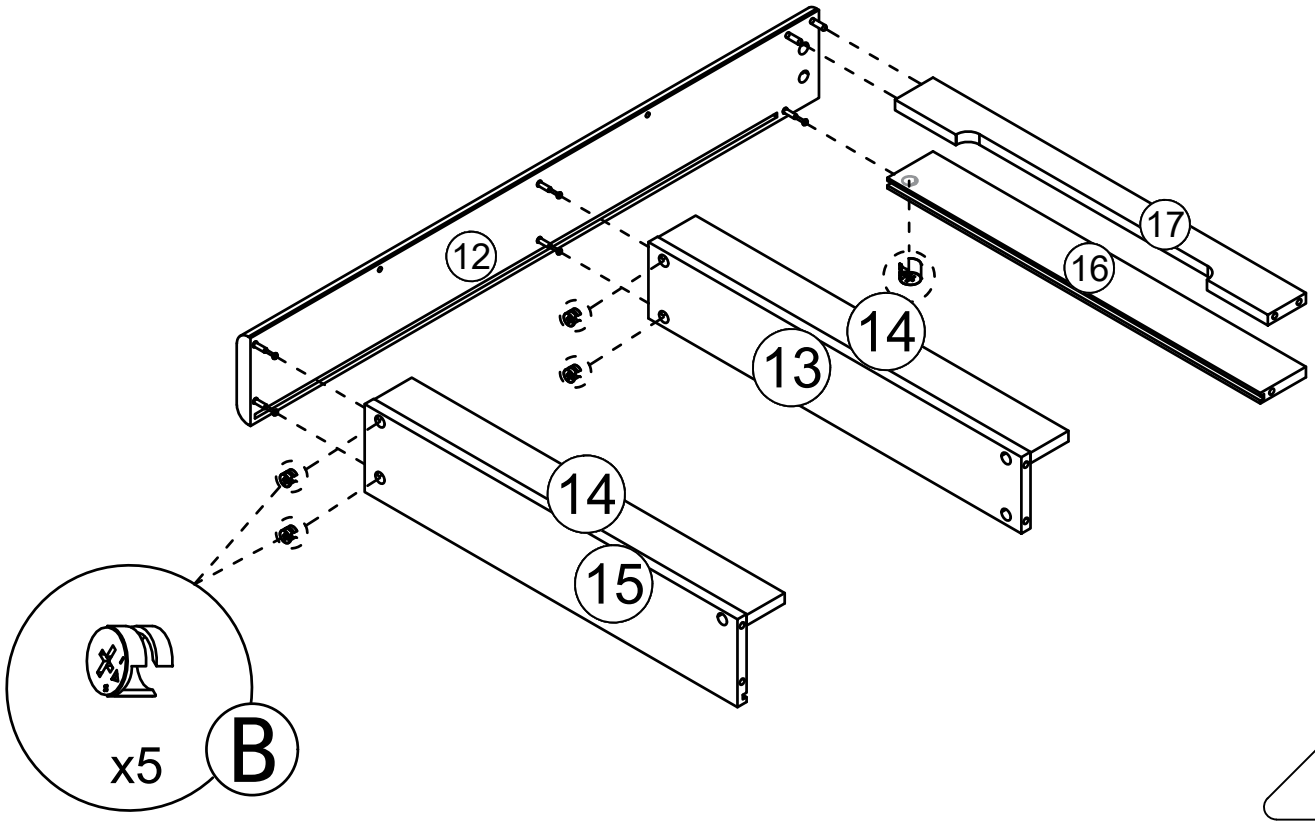

Step 24

Ⓕ x2

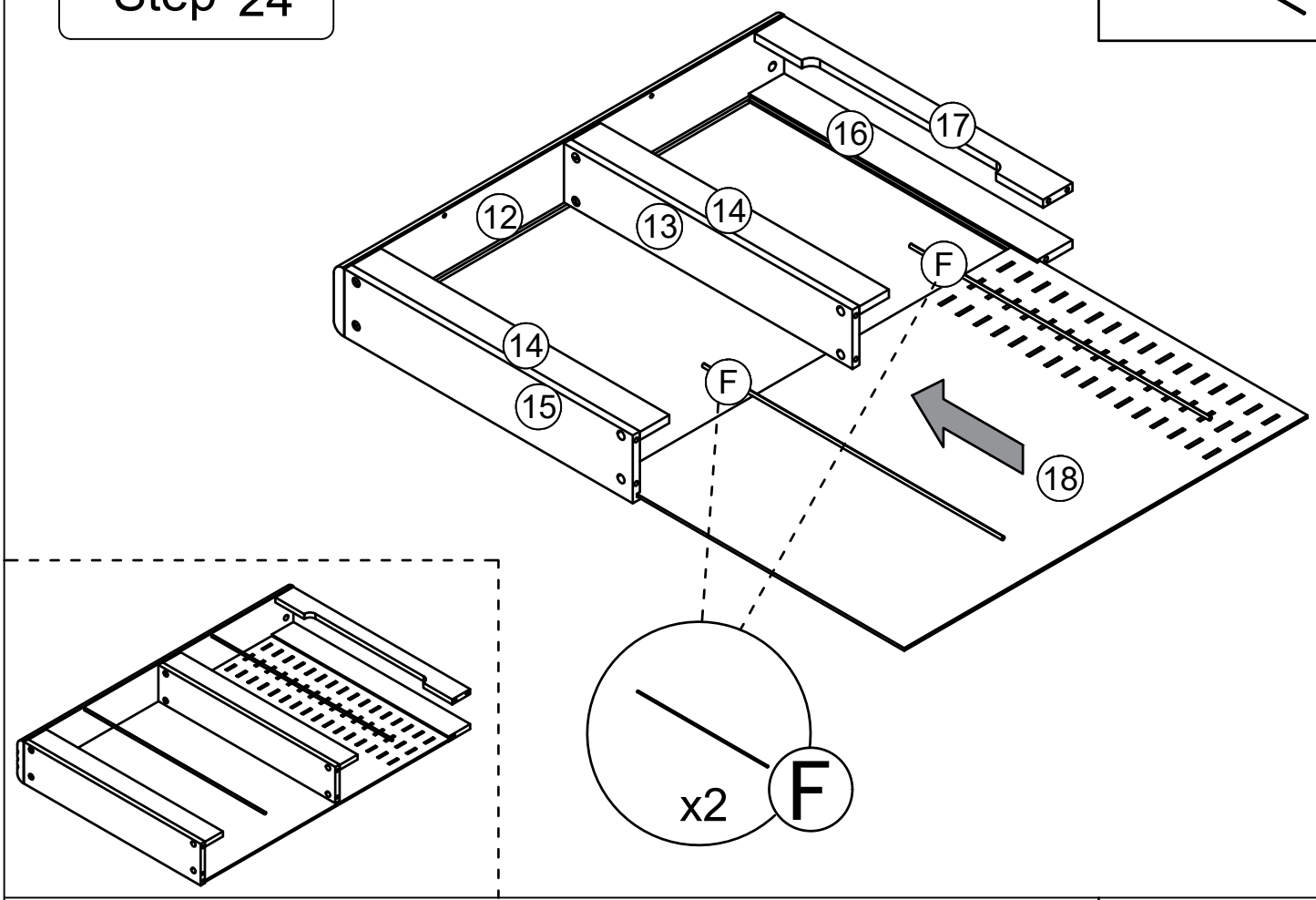

Step 25

Ⓑ x5

Ⓖ x4

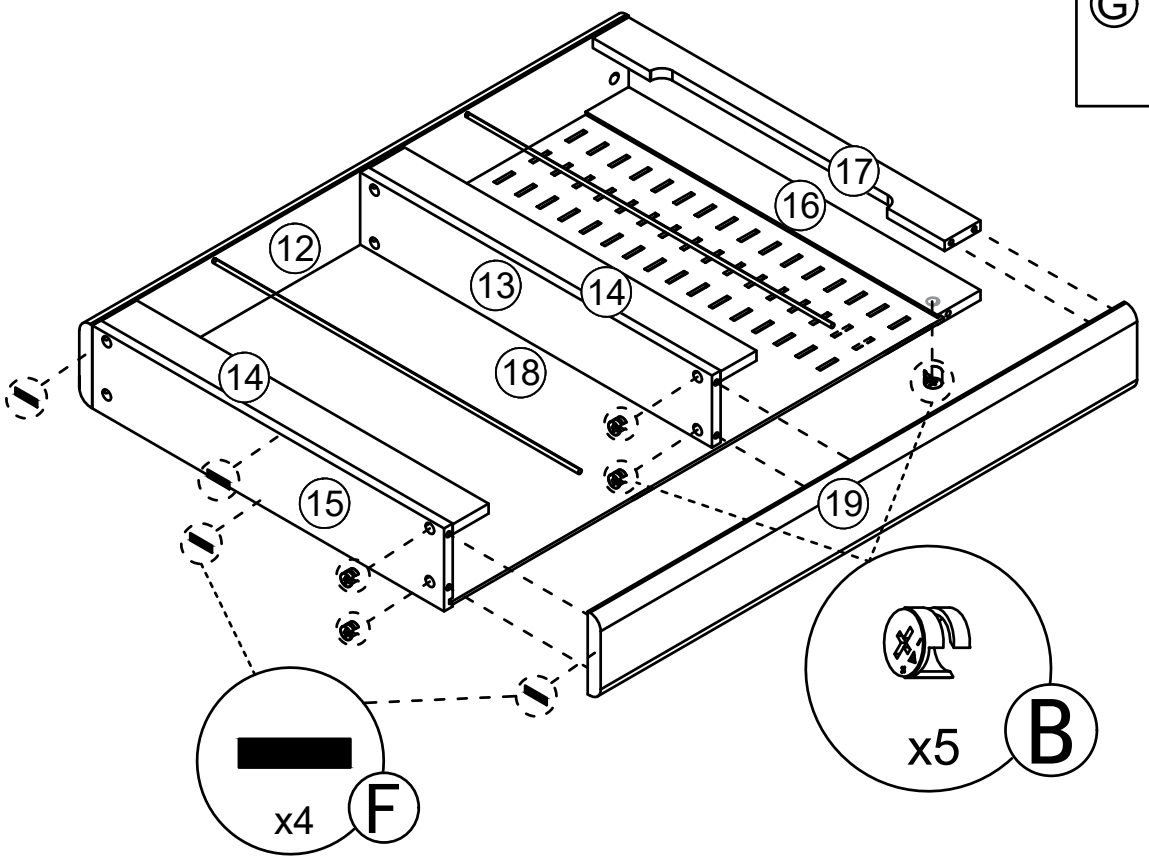

Step 26

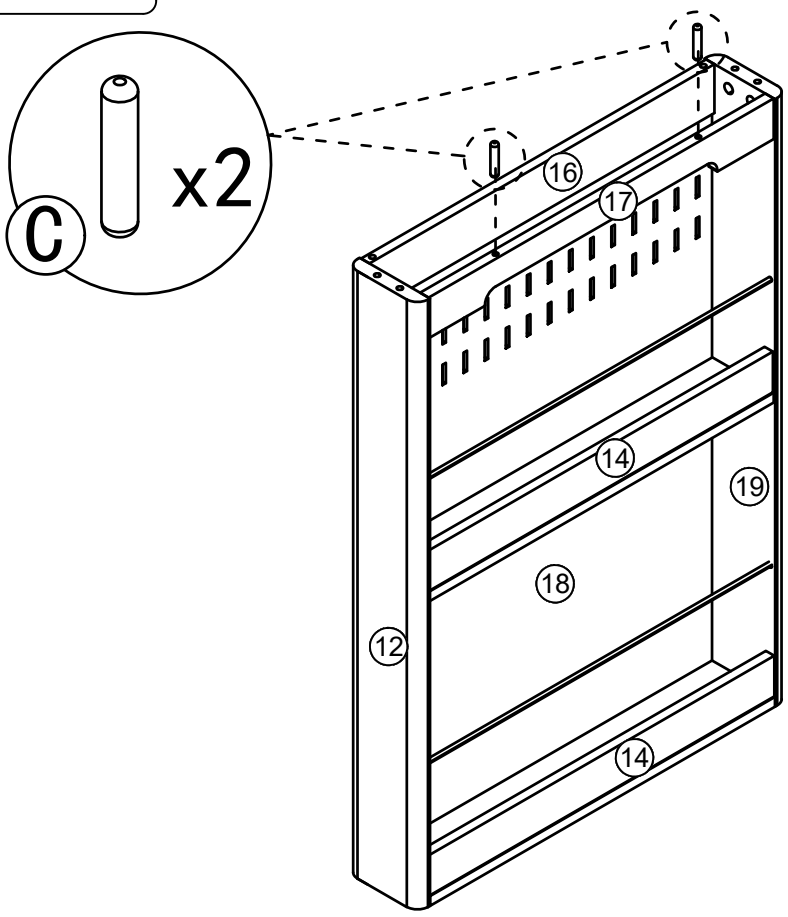

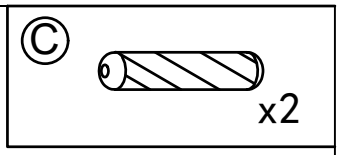

Step 27

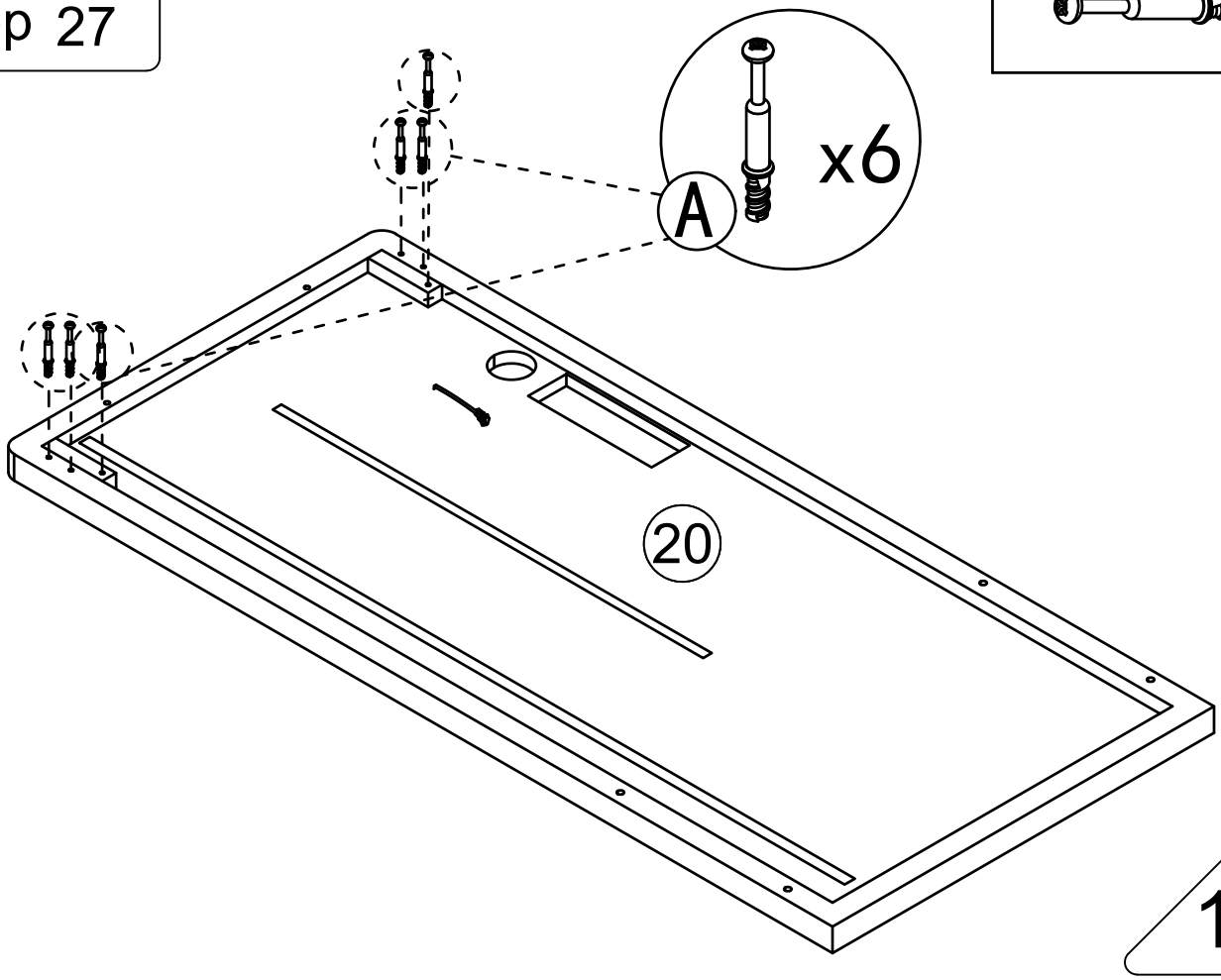

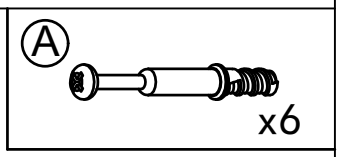

Step 28

Ⓘ x2

Effect 1

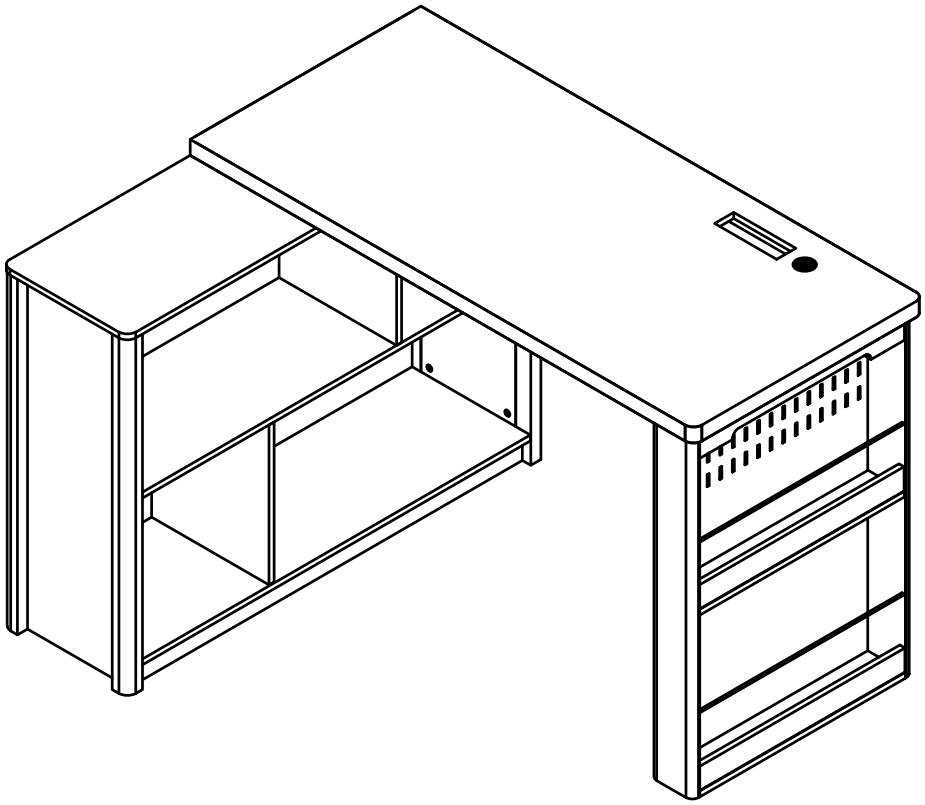

Effect 2

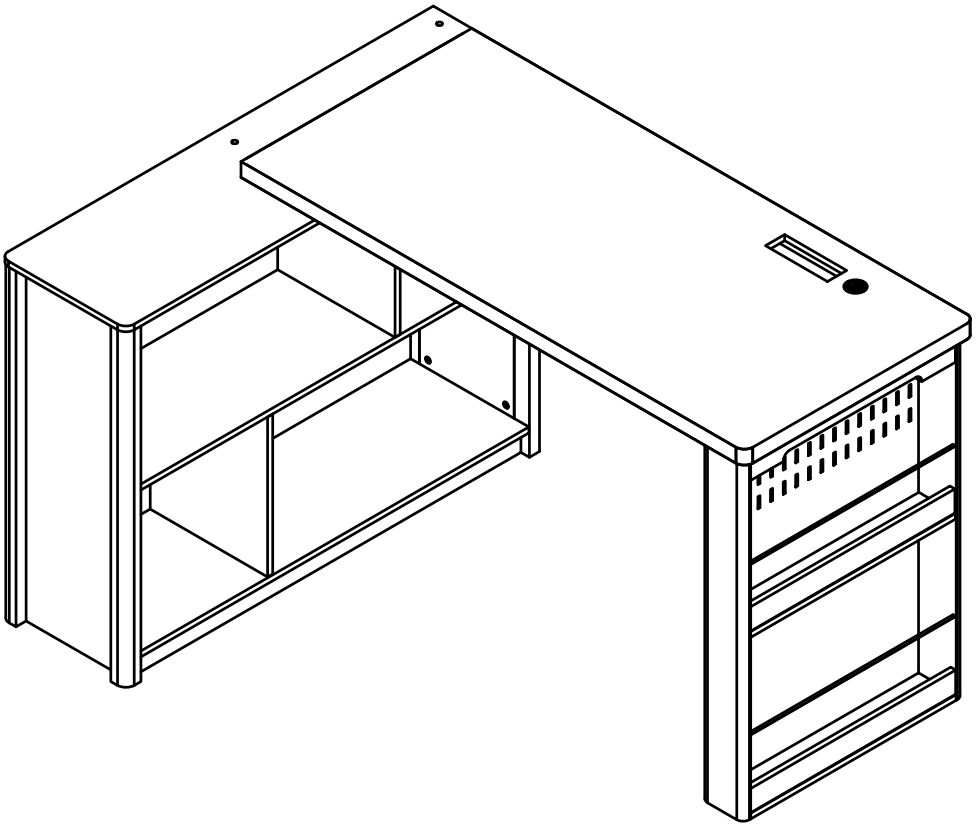

This desk offers two flexible placement options, allowing you to arrange it according to your space and preferences before proceeding with the installation of hardware components.

Step 29

B		x6
J		x1
I		x2

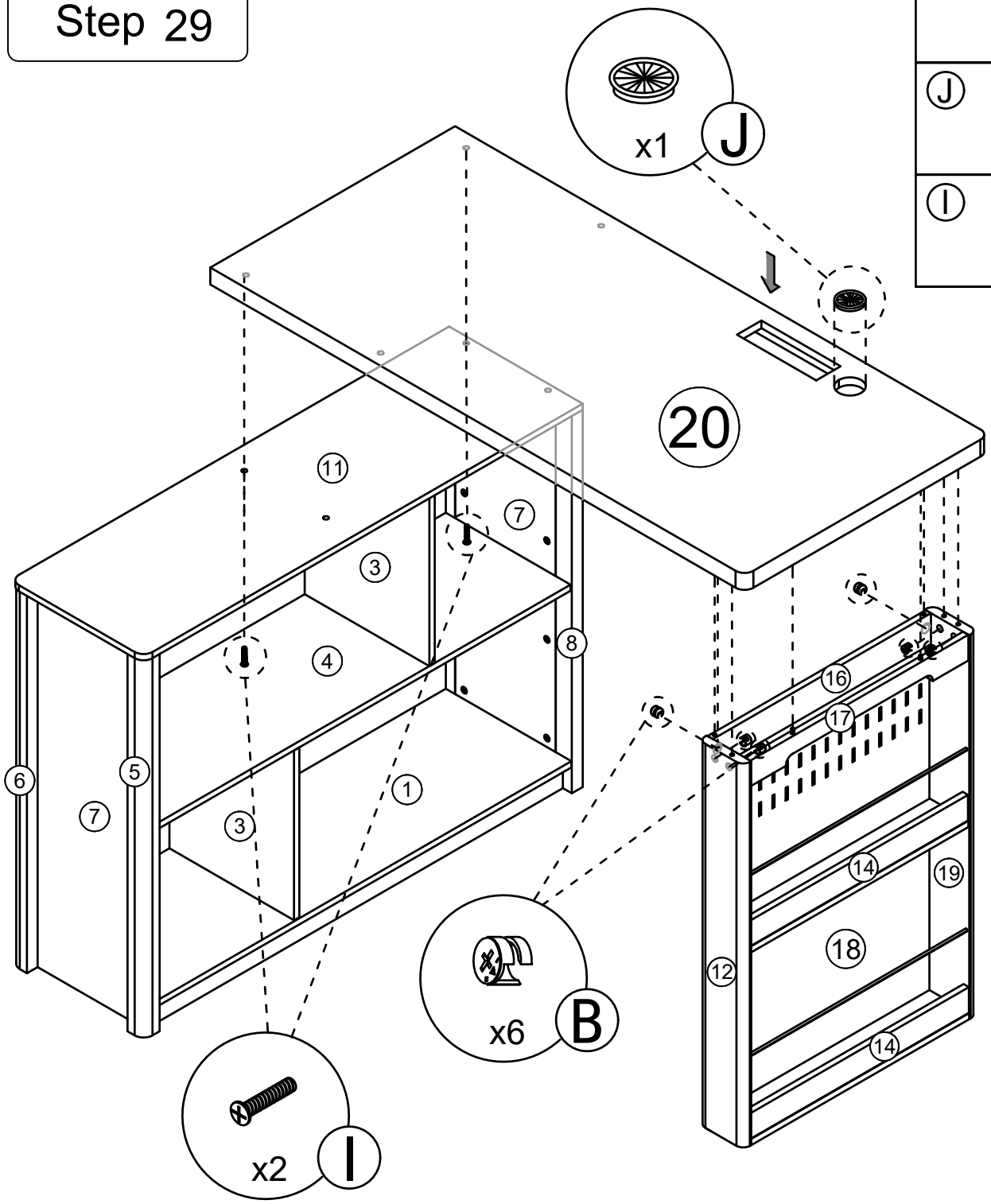

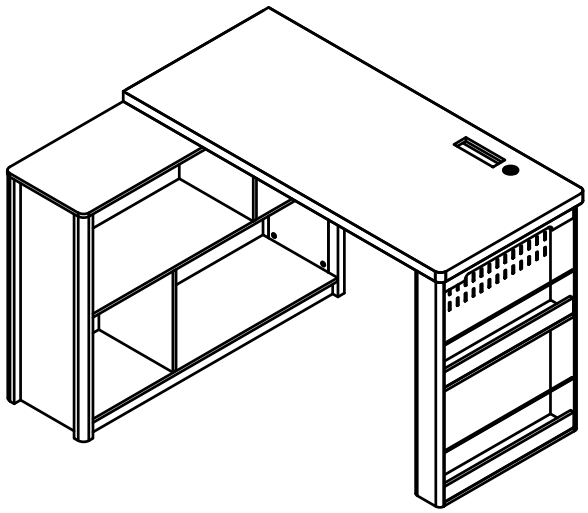

Effect 1

Step 30

B		x6
J		x1
I		x2

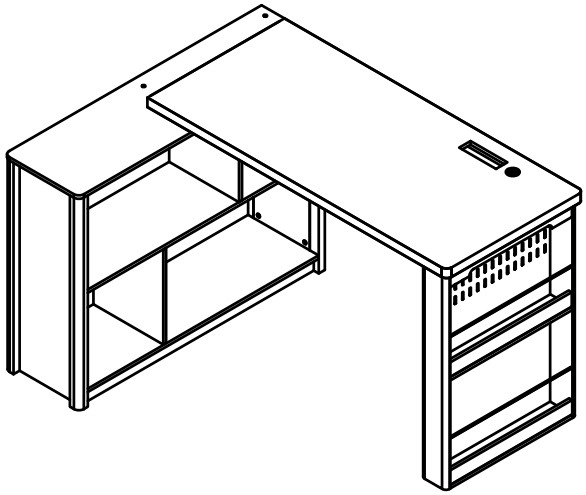

Effect 2

Step 31

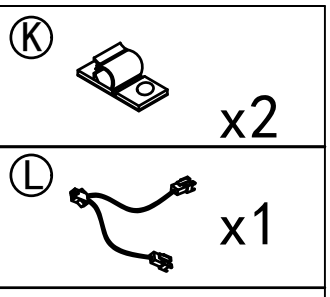

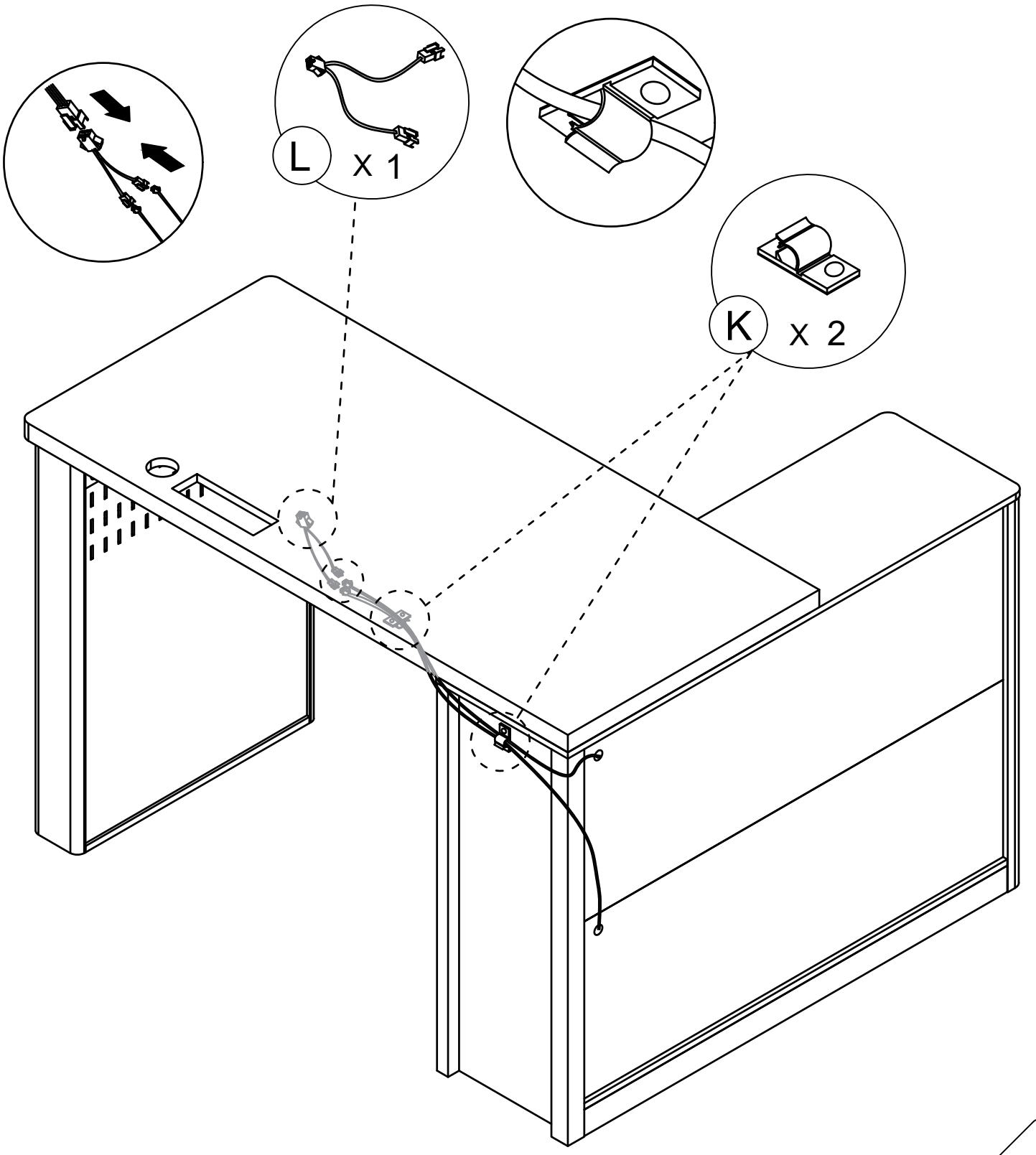

Step 32

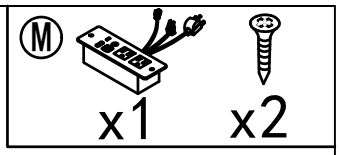

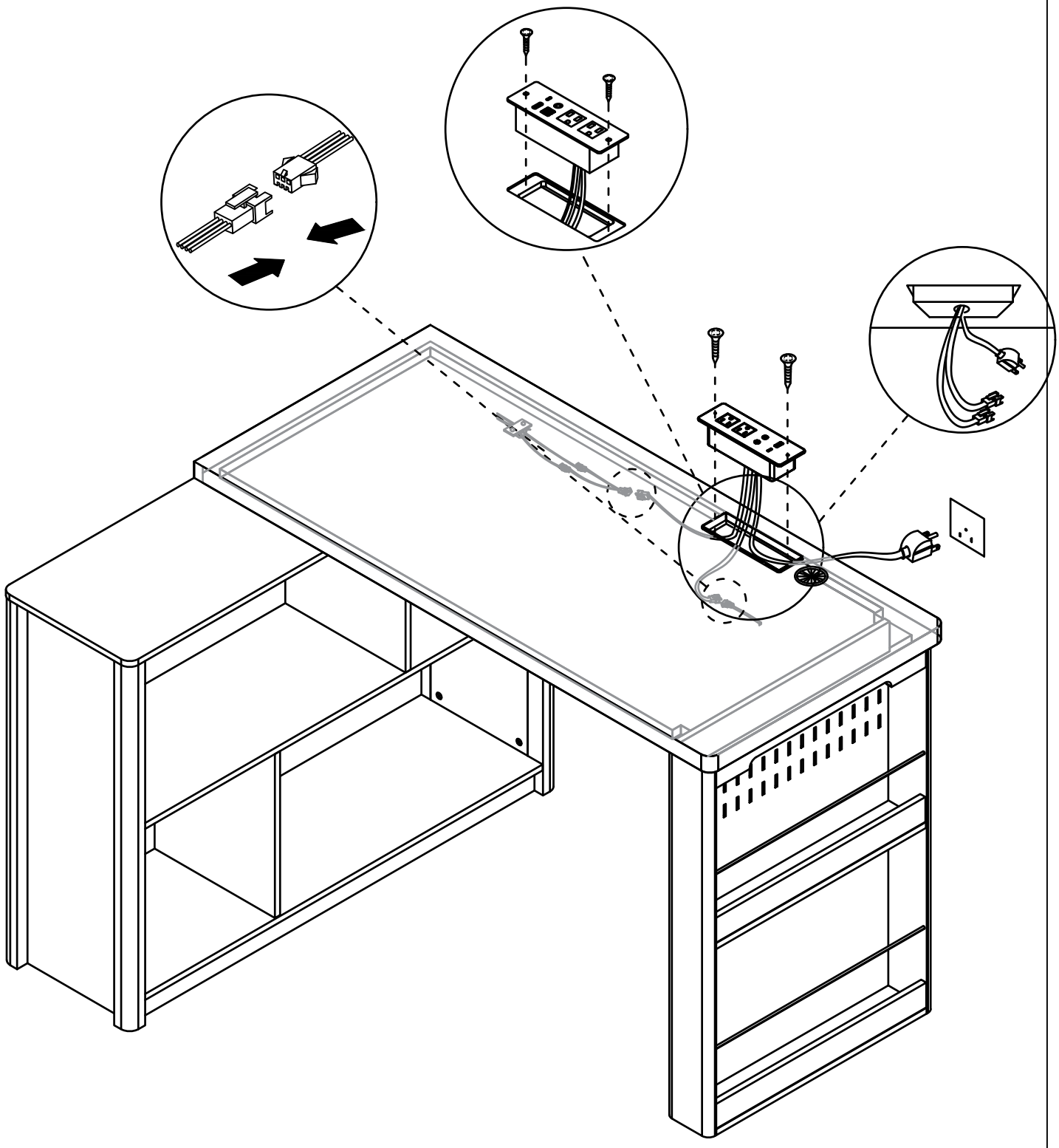

Step 33

N x2 x2

x4 x2

x2

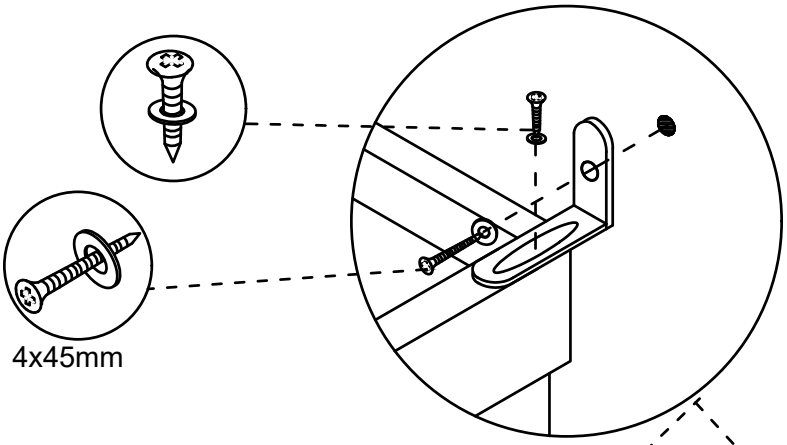

4x45mm

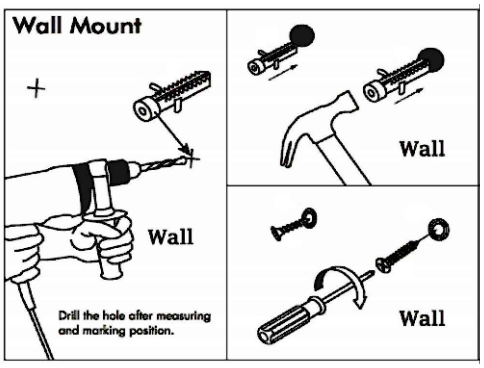

wall

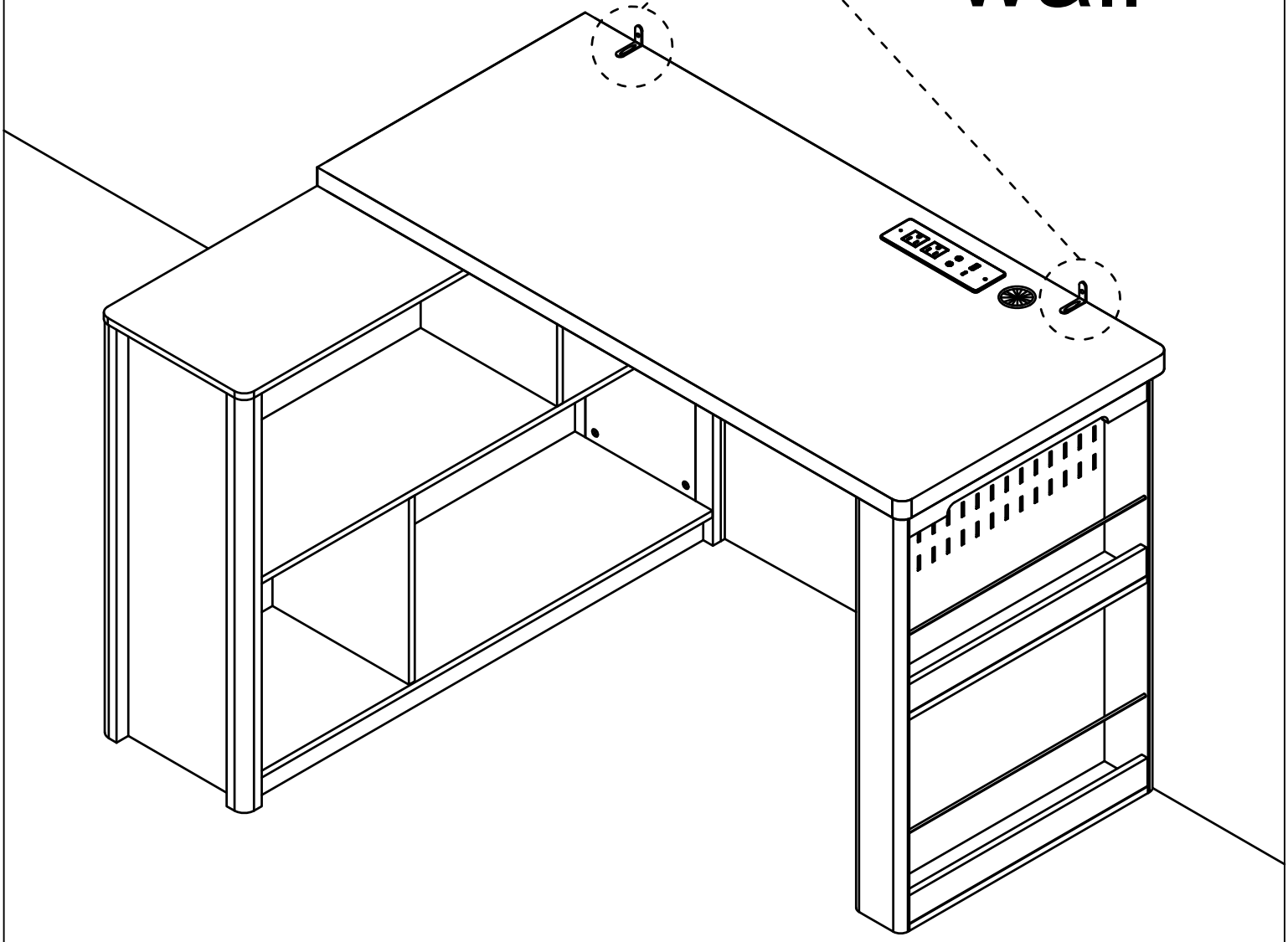

This hardware is used to strengthen the fixation, and customers can choose to install it according to their own needs.

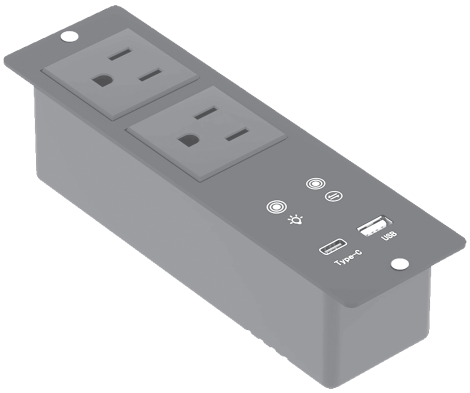

User's Guide

A27

Thank you for purchasing this product.

To use this product, please connect it to a power source.

Please use if the product works normally after connecting to power.

Introduction

The box is an intelligent controller. It has 1 USB output port 1 Type-c port and can distribute the current output up to 5V DC-2A. With 2 touch buttons, it can turn. ON/OFF the light, change light colors, and adjust the light luminance.

Operation

This touch button controls the on/off of the light

Short touch -> lighting on -> short touch -> lighting off.

This touch button controls the color switching and brightness adjustment of the light

1. It can only be used when the light is on
2. Offering 3 different colors to choose from.Simply tap to cycle through the options.
3. Long touch -> adjust the luminance.

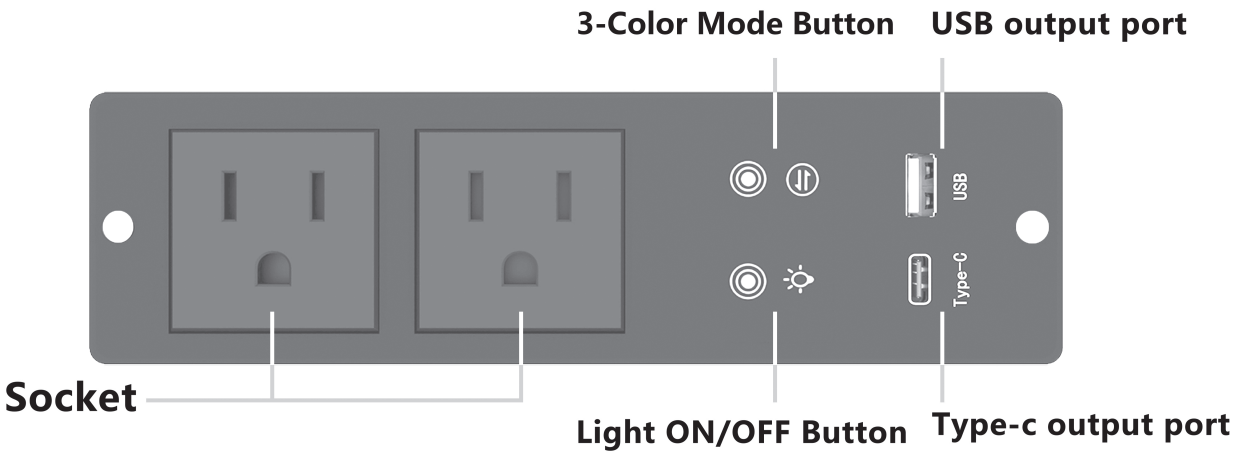

⚠ ATTENTION PLEASE

1. If there is no touch response suddenly, Re-plug the power to reset the touch static electricity.

2. If you have any questions when installing, please feel free to contact us. Thank you.