Item#: GFT-10513R

Assembly Instructions
42 Inch Gas Fire Pit Table

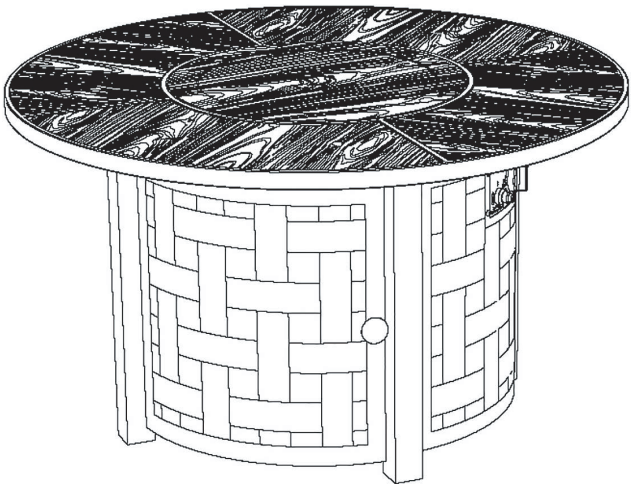

⚠DANGER · FLAMMABLE GAS UNDER PRESSURE.
LEAKING LP-GAS MAY CAUSE A FIRE OR EXPLOSION IF IGNITED CAUSING SERIOUS BODILY INJURY OR DEATH.
CONTACT LP GAS SUPPLIER FOR REPAIRS, OR DISPOSAL OF THIS CYLINDER OR UNUSED LP-GAS.

⚠ WARNING · FOR OUTDOOR USE ONLY.*
DO NOT USE OR STORE CYLINDER IN A BUILDING, GARAGE OR ENCLOSED AREA.

⚠ WARNING:

- Know the odor of LP-gas. If you hear, see or smell leaking LP-gas, immediately get everyone away from the cylinder and call the Fire Department. Do not attempt repairs.
- Caution your LP-gas supplier to:
  Be certain cylinder is purged of trapped air prior to first filling.
  Be certain not to over fill the cylinder.
  Be certain cylinder requalification date is checked.
- LP-gas is heavier than air and may settle in low places when dissipating.
- Contact with the liquid contents of cylinder will cause freeze burns to the skin.
- Do not allow children to tamper or play with cylinder.
- When not connected for use, keep cylinder valve turned off. Self contained appliances shall be limited to a cylinder of 30 lb capacity or less.
- Do not use, store or transport cylinder where it would be exposed to high temperatures. Relief valve may open allowing a large amount of flammable gas to escape.
- When transporting, keep cylinder secured in an upright position which cylinder valve turned off.

WHEN CONNECTING FOR USE:

- Use only in compliance with appliable codes.
- Read and follow manufacturer's instructions.
- Consult manufacturer's instructions concerning the cylinder connection provided with your appliance.
- Be sure regulator vent is not pointing up.
- Turn off all valves on the appliance.
- Do not check for gas leaks with a match or open flame. Apply soapy water at areas marked "X". Open cylinder valve. If bubble appears, close valve and have LP-gas service person make needed repairs. Also, check appliance valves and connections to make sure they do not leak before lighting appliance.
- Light appliance(s) following manufacturer's instructions.
- When appliance is not is use, keep the cylinder valve closed.

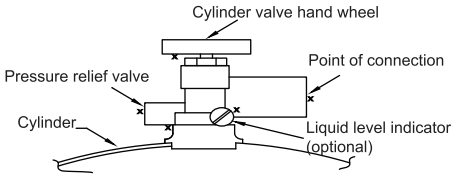

DO NOT REMOVE, DEFACE, OR OBLITERATE THIS LABEL
***EXCEPT AS AUTHORIZED BY ANSI/NFPA 58.**

⚠ **DANGER.** Do not store a spare LP cylinder under or near a barbecue grill, or other heat sources. NEVER fill an LP cylinder beyond 80% full: a fire causing death or serious injury may occour.

Please keep this instruction manual for future reference

⚠ WARNING

READ INSTRUCTION MANUAL BEFORE ATTEMPTING ASSEMBLE OR OPERATE THIS PRODUCT.
Keep the screws and parts out of reach of children.
(Made in China)

Table of Contents

Table of Contents 2
Safety Information.....2-4
Pre-Assembly.....5
Package Contents 6
Assembly.....8-11
Operating Instructions 12-14
Maintenance.....15
Care and Cleaning 15
Troubleshooting 16

Safety Information

Read the instruction before use. This appliance must be installed in accordance with such regulations as are enforced.

⚠ DANGER:

FIRE OR EXPLOSION HAZARD

If you smell gas:

- Shut off gas to the appliance.
- Extinguish any open flame.
- If odor continues, leave the area immediately
- After leaving the area, call your gas supplier or fire department.

Failure to follow these instructions could result in fire or explosion, which could cause property damage, personal injury, or death.

⚠ DANGER



CARBON MONOXIDE HAZARD

This appliance can produce carbon monoxide which has no odor.

Using it in an enclosed space can kill you.

Never use this appliance in an enclosed space such as a camper, tent, car or home.

⚠ WARNING:

Do not store or use gasoline, or other flammable vapors and liquids, in the vicinity of this or any other appliance. An LP-cylinder not connected for use shall not be stored in the vicinity of this or any other appliance.

INSTALLER: leave this manual with the appliance.

CONSUMER: Retain this manual for future reference.

⚠ WARNING: For Outdoor Use Only!

Installation and service must be performed by a qualified installer, service agency, or the gas supplier

⚠ WARNING:

Improper installation, adjustment, alteration, service or maintenance can cause property damage, personal injury or loss of life.
Read this installation, operating, and maintenance instructions thoroughly before installing or servicing this equipment.

⚠ WARNING:

FOR YOUR SAFETY:

If the information in this manual is not followed exactly, a fire or explosion may result causing property damage, personal injury or loss of life.
WHAT TO DO IF YOU SMELL GAS:
Do not try lighting any appliance.
Do not touch any electrical switch; do NOT use any phone in your building.
Immediately call your gas supplier from a neighbor's phone.
Fllow the gas supplier's instructions.
If you cannot reach your gas supplier.
Call the fire department.
Installation and service must be performed by a qualified installer, service agency or gas supplier. Save these instructions for future reference. If you are assembling this unit for someone else, give this manual to him or her to read and save for future reference.

Safety Information (continued)

WARNING:

You must provide propane gas and propane cylinder. Use a standard 20 lb. propane cylinder only.

Use this heater only with a propane vapor withdrawal supply system. See Chapter 5 of the Standard for Storage and Handling of Liquefied Petroleum Gas, ANS/NFPA 58. Your local library or fire department should have this book.

The pressure regulator and hose assembly supplied with the appliance must be used.

The installation must conform with local codes, or in absence of local codes, with National Fuel Gas Code, ANSI Z223.1.

A dented, rusted, or damaged propane cylinder may be hazardous and should be checked by your cylinder supplier. Never use a propane cylinder with a damaged valve connection.

The LP-gas supply cylinder must be constructed and marked in accordance with the U.S. Department of Transportation (D.O.T) Specifications for LP-Gas Cylinders, or the standard for Cylinders, Spheres and Tubes for Transportation of Dangerous Good and Commission, CAN/CSA-B339, as applicable.

The LP-gas supply cylinder must be provided with a cylinder connection device compatible with the connection for the appliance.

The cylinder used must include a collar to protect the cylinder valve.

The LP-gas supply cylinder must be provided with a listed overfill protection device (OPD).

Do not store a spare LP gas cylinder under or near this appliance.

Never fill the cylinder beyond 80 percent full.

For appliances designed to use a CGA No. 791IQCC connection.

Place the dust cap on the cylinder valve outlet whenever the cylinder is not in use.

Note: Gas supply pressure: 25 PSI to 250 PSI.

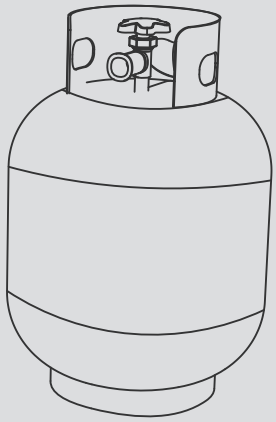

Standard 20 lbs. tank

WARNING: FUELS USED IN LIQUIFIED PROPANE GAS APPLIANCES, AND THE PRODUCTS OF COMBUSTION OF SUCH FUELS, CAN EXPOSE YOU TO CHEMICALS INCLUDING BENZENE, WHICH IS KNOWN TO THE STATE OF CALIFORNIA TO CAUSE CANCER AND CAUSE BIRTH DEFECTS OR OTHER REPRODUCTIVE HARM. For more information go to: www.P65Warnings.ca.gov.

Safety Information (continued)

WARNING:

Solid fuels shall not be burned in this appliance.

The installation must conform with local codes or, in the absence of local codes, ANSIZ223. 1/NFPA54, NFPA58 Natural Gas and Propane Installation Code, CSA B149.1, or Propane Storage and Handling Code, B149.2.

This appliace must be isolated from the gas supply piping system by closing its individual manual shutoff valve during any pressure testing of the gas supply piping system at test pressures equal to or less than 1/2 psi (3.5 kPa).

Max. gas supply 6791.3 in wc (1725 kPa). Manifold pressure 11 in wc (2.74 kPa).

Prior to use, check for damaged parts such as hoses, regulators, pilots, or burners.

Inspect the fuel supply connection for signs of leakage (including the hose for the LP models) before each use of the appliance.

All leak tests should be done with a soapy solution. NEVER USE AN OPEN FLAME TO CHECK FOR LEAKS.

Children and adults should be alerted to the hazards of high surface temperatures and should stay away from the appliance to avoid burns or clothing ignition. This appliance comes with a heat shield which is an important safety component preventing contact with the fire bowl when adjusting the propane valve.

Young children should be carefully supervised when they are in the area of the heater.

Clothing or other flammable materials should be not be hung from the heater, or placed on or near the heater.

Any guard or other protective device removed for servicing the heater, must be replaced prior to operating the heater.

Installation and repair should be done by a qualified service person. The heater should be inspected before use and at least annually by a qualified service person.

More frequent cleaning may be required as necessary. It is imperative that the control compartment, burners, and circulating air passageways of the heater be kept clean.

Keep the appliance area clear and free from combustible materials, gasoline, and other flammable vapors and liquids.

DO NOT OBSTRUCT the combustion process or air ventilation flow.

Keep the ventilation opening(s) of the cylinder enclosure free and clear from debris.

The appliance should be used in a well-ventilated space and not in a building, garage or any other enclosed area.

An appliance may be installed within a shelter if the shelter meets one of the following conditions:
The shelter has walls on all sides, but with no overhead cover.
The shelter is within a partial enclosure which includes side walls. These side walls may be parallel, as in a breezeway, or at right angles to each other.

Pre-Assembly

PLANNING ASSEMBLY

Carefully remove all pieces from the carton and make sure that you have all parts (refer to the hardware and package contents list).

YOUR OWNER'S MANUAL

Keep and store this Owner's Manual for future reference. It contains important instructions and procedures for safety and maintenance.

NOTE: Please read and understand the entire manual before you assemble, operate, or install the fire pit.

TOOLS REQUIRED (NOT INCLUDED)

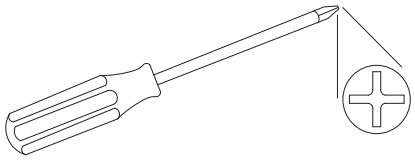

Phillips screwdriver

HARDWARE INCLUDED

Part	Description	Quantity
AA	M6 x 10 mm Bolt	24
BB	M5 x 10 mm Bolt	4
CC	M5 Nut	4
DD	M6 Nut	1

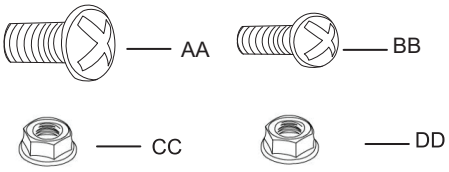

Package Contents

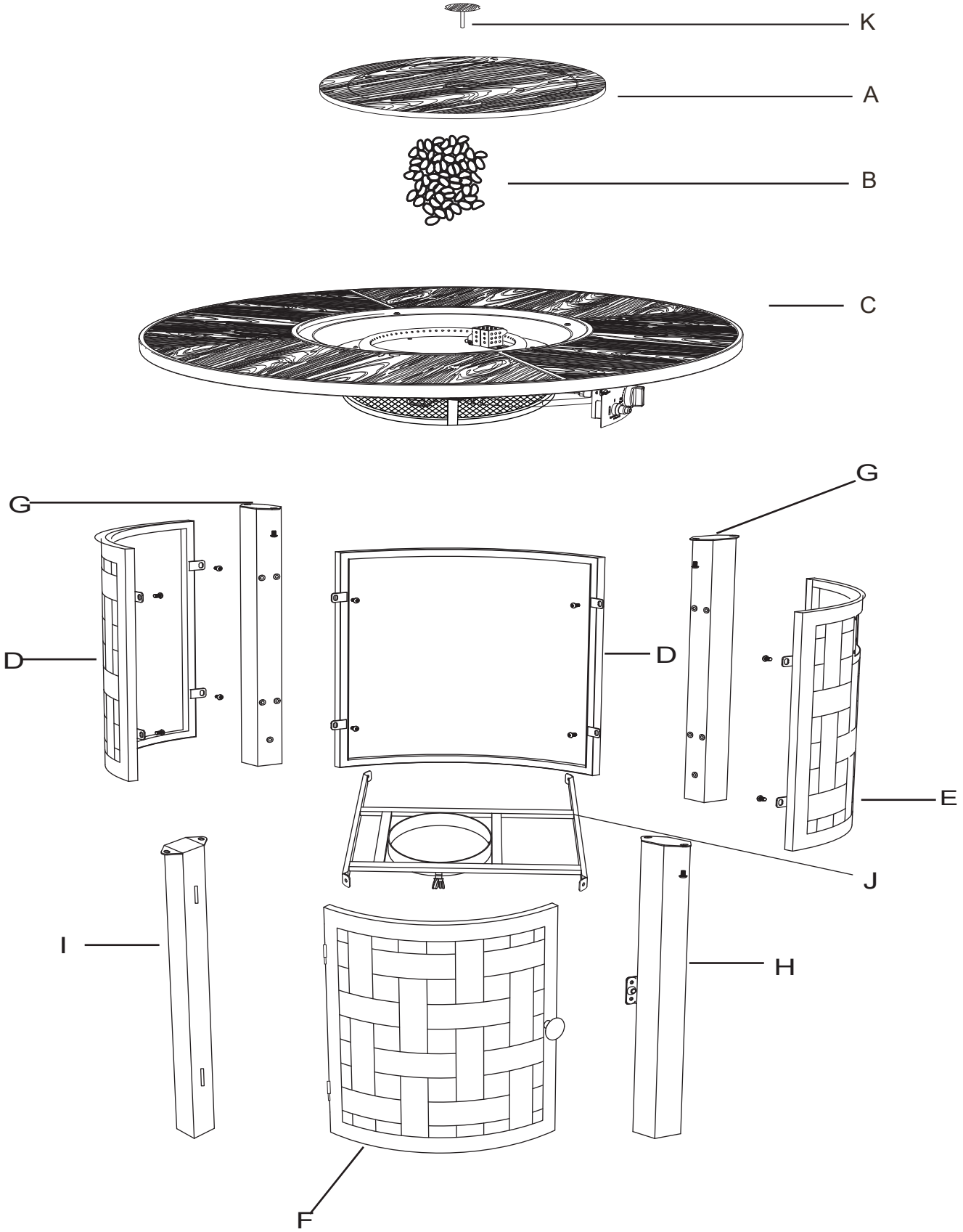

Package Contents

PARTS	DESCRIPTION	REFERENCE IMAGE	QTY
A	COVER		1
B	FLAME GLASS		1
C	TABLE TOP WITH BURNER		1
D	SIDE PANEL	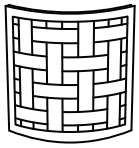	2
E	SIDE PANEL WITH WINDOW	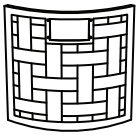	1
F	DOOR PANEL	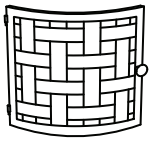	1
G	BACK LEG	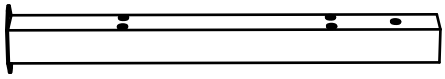	2
H	FRONT LEG(RIGHT)		1
I	FRONT LEG(LEFT)		1
J	GAS TANK SUPPORT	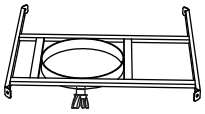	1
K	HANDLE		1
L	AAA BATTERY	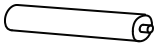	1

Assembly

Step 1：

Connect the handle(K) to the cover(A) by using M6 Nut(DD)x1pc

PLEASE DON ’ T TIGHTEN THE NUT .

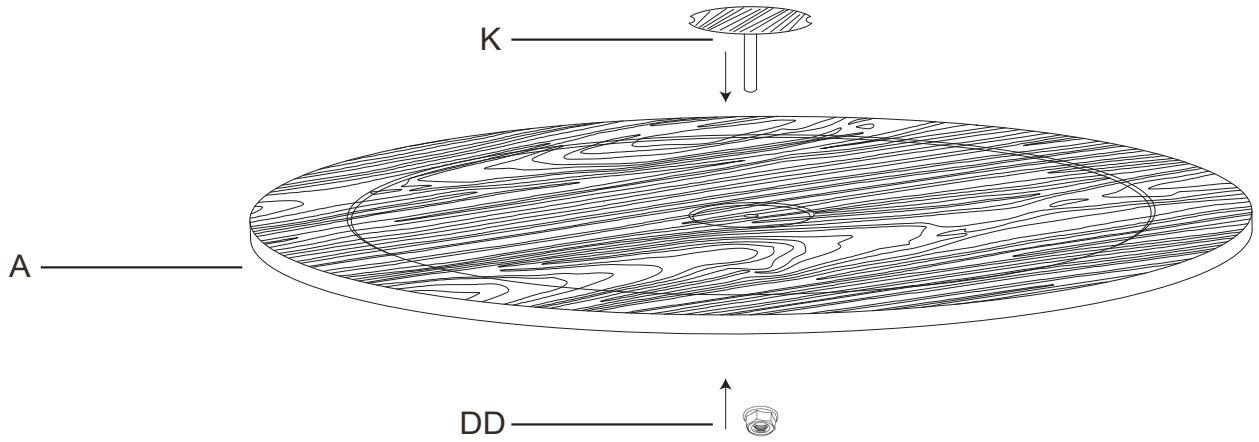

Step 2：

Connect all four legs (G,H,I) to the table top with burner(C)by using M6x10 bolts(AA)x8pcs

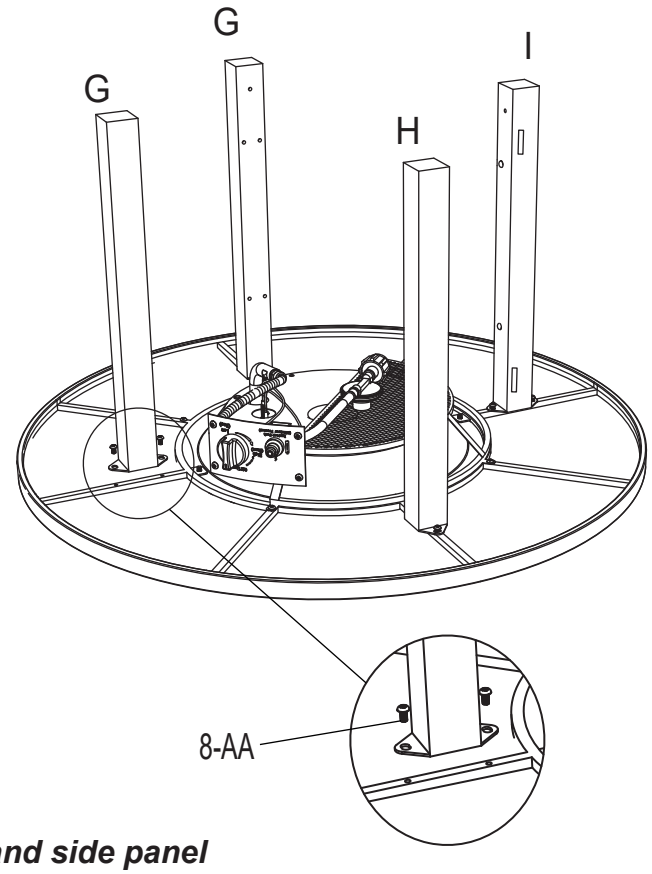

NOTE: PLACE TABLE TOP TO NON-ABRASIVE SURFACE.

PLEASE DON’T TIGHTEN ANY SCREWS TO THE END AT THIS STEP.

Please pay special attention to the orientation of all legs and side panel according to the position of the desktop.
If the orientation is wrong, the entire installation will not proceed smoothly.

Assembly (continued)

Step3:

Connect side panel with windows (E) to front leg(H)and back leg (G) by using M6x10 bolts (AA) x4pcs.

Connect side panel (D)to front leg(I) and back leg(G) by using M6x10 bolts (AA) x8pcs.

Connect control panel to side panel with window(E) by M5x10bolts (BB) x4pcs and M5 nut (CC)x4pcs.

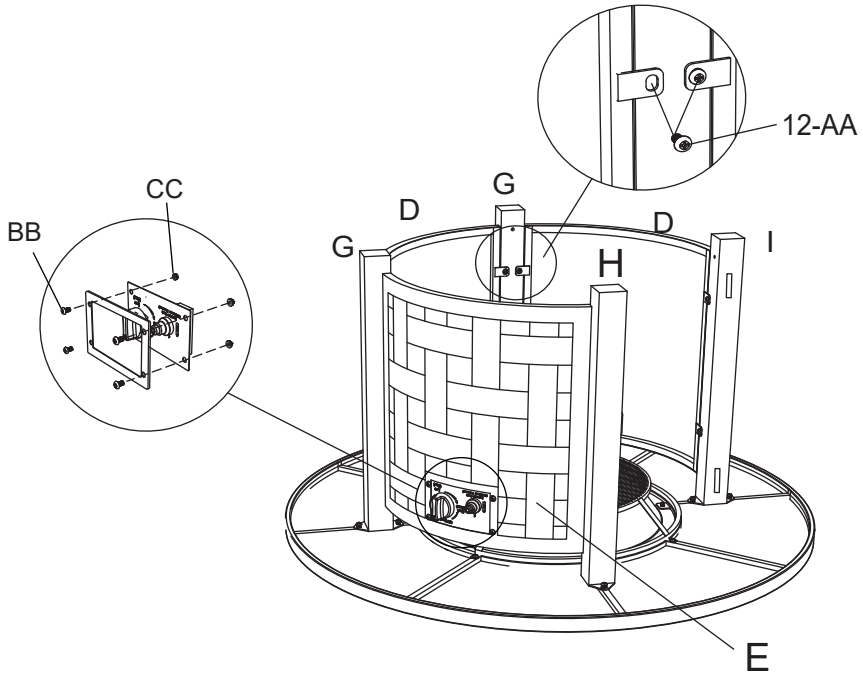

Step4:

Connect the gas tank support(J) to the semi-assembled body by using M6x10 bolts(AA) x4pcs.

Adjust to the suitable place,then tighten hardware.

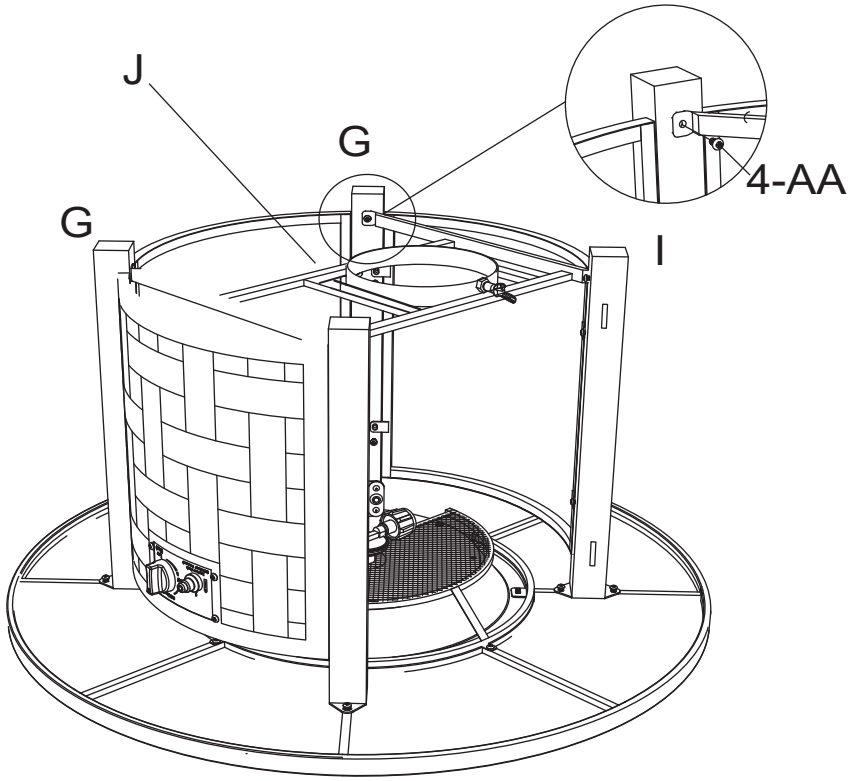

Assembly (continued)

Step5:

Attach Door panel(F) into the front leg(I) hole.

The hole of tank support is U-shape and adjustable, adjust junction of tank support and leg(I, H) to suitable place, then close the door.

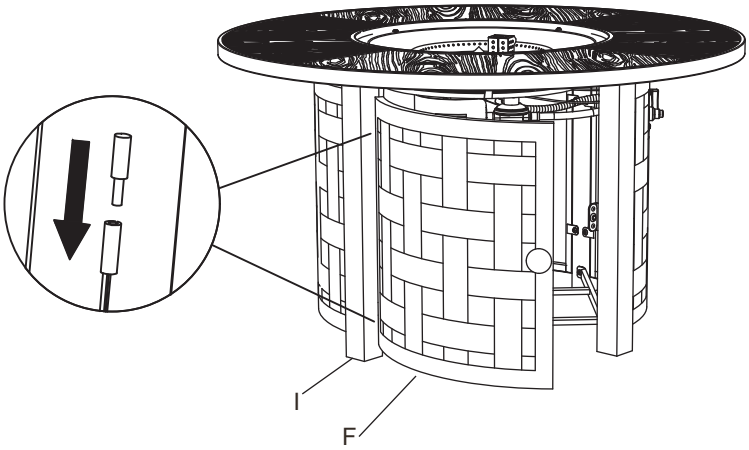

Step6:

Place the Flame glass (B) into the fire bowl. Ensure flame glass is not placed on the ignition portion of the burner. Place the cover (A) over the top. The cover must be removed when the burner is in operation. Wait until the unit cools before replacing the cover.

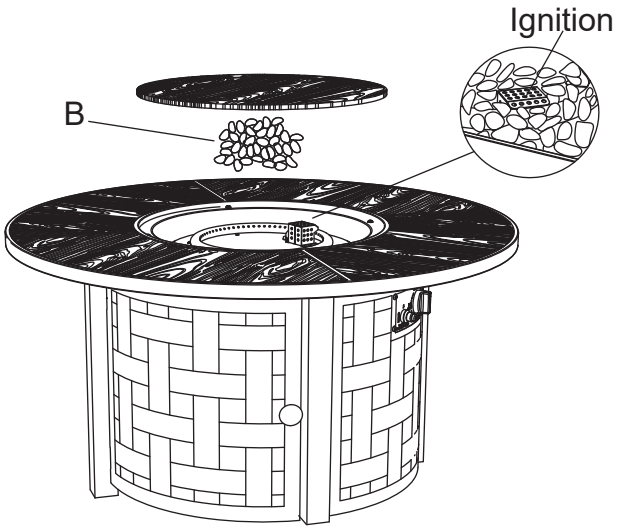

Step7:

Put the cylinder into the gas tank support (J), and secure the cylinder by tightening the screw in the gas tank support.

Keep the hose face to Front leg(H).

The propane cylinder is sold separately. Use a standard 20 lb. propane cylinder only.

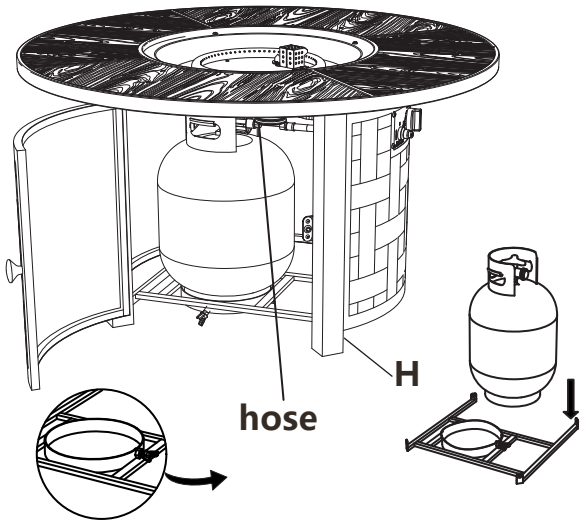

Assembly (continued)

Step 8:

Connect the hose of regulator to the cylinder.

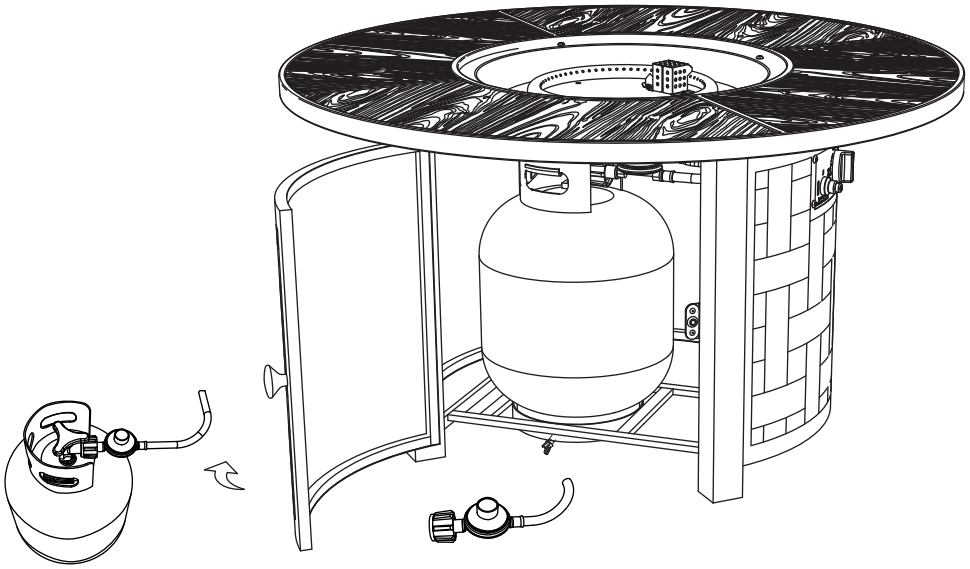

Step 9:

Open the igniter and place the AAA battery (L) into the igniter. Then tighten clockwise.

Now the gas fire pit table is ready to use.

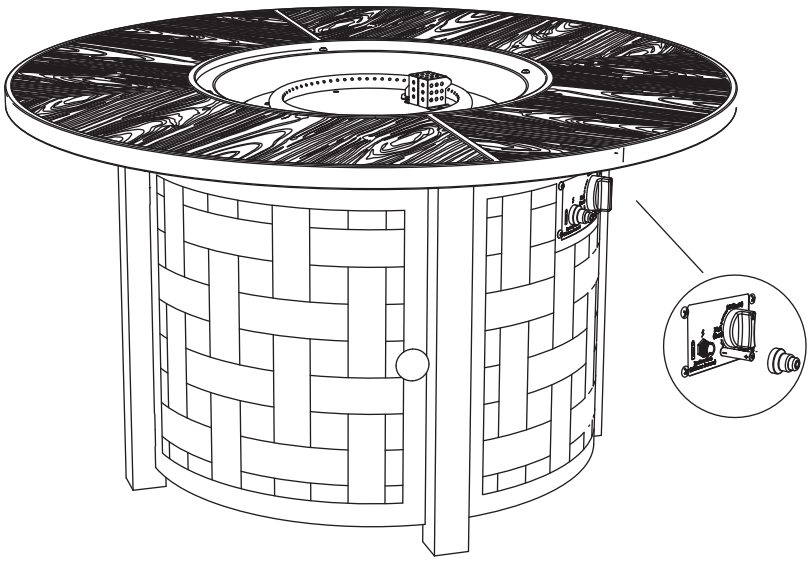

Operating

WARNING: Never use this appliance for other than the intended use. DO NOT use this appliance to prepare food.

Initial Lighting: When lit for the first time, the appliance emits a slight odor. This is a normal temporary condition caused by the “burn-in ” of internal paints and lubricants used in the manufacturing process and does not occur again. Simply run the main burner on high for approximately one-half hour.

WARNING:

Children and adults should be alerted to the hazards of high surface temperatures and should stay away from the appliance to avoid burns or clothing ignition. The appliance comes with a heat shield which is an important safety component preventing contact with the fire bowl when adjusting the propane valve.

Children should be carefully supervised when they are in the area of the appliance.

Clothing or other flammable materials should not be hung from the appliance, or placed on or near the appliance. The area above the fire pit may be extremely hot. Direct contact with these surfaces should be avoided in order to prevent burns or clothing ignition.

Any guard or protective device removed for servicing the appliance must be replaced prior to operating the appliance. Installation and repair should be done by a qualified service person.

The appliance should be inspected before each use and at least annually by a qualified service person. More frequent cleaning may be required necessary. It is imperative that the control compartment, burners and circulating air passageways of the appliance be kept clean.

WARNING:

Never use the appliance while it is raining. Always turn the appliance off when raining.

Never use the appliance if the burner is damaged. Inspect the burner before each use. Ensure that no debris such as leaves; grass or other objects have entered or are on the appliance. If the burner is damaged it must be replaced prior to using this appliance with a replacement burner specified by your dealer.

Inspect the hose assembly before each use. If there is evidence of excessive abrasion or wear, or if the hose is damaged it must be replaced prior to using the appliance with a replacement hose assembly specified by your dealer.

WARNING: Any modification to the appliance may compromise the safety of this appliance. Special concern is as follows:

Do not bypass the thermocouple safety.

Do not operate the appliance if any parts have been under water. Immediately call a qualified service technician to inspect the appliance and replace any part of the control system, and any gas control, which has been under water.

Operating (continued)

LEAK TESTING OPERATION

WARNING: A leak test must be performed annually or if a part of the gas system is replaced.

WARNING: Never use an open flame to check for gas leaks. Be certain no sparks or open flames are in the area while you check for leaks. Sparks or open flames will result in a fire or explosion, damage to property, serious bodily injury, or death.

LEAK TESTING:

1, Make 2-3 oz. of leak detection solution by mixing one part liquid dishwashing soap with three parts water.
2, Make sure all fire pit and light valves are OFF.
3, Apply several drops of solution where hose attaches to regulator.
4, Apply several drops of solution where regulator connects to cylinder.
5, Turn cylinder valve ON.

If bubbles appear at any connection, there is a leak.

1, Turn cylinder valve OFF.
2, If leak is at hose/regulator connection: tighten connection and perform another leak test. If bubbles continue appearing, pls contact after-services for assistance.
3, If leak is at regulator/cylinder valve connection: disconnect, reconnect, and perform another leak test. If you continue to see bubbles after several attempts, cylinder valve is defective, and contact after-services for assistance.

If NO bubbles appear at any connection, the connections are secure.

NOTE: Whenever gas connections are loosened or removed, you must perform a complete leak test .

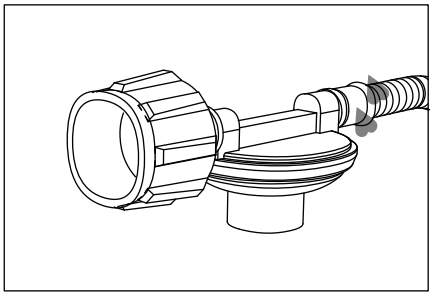

Hose/Regulator Connection

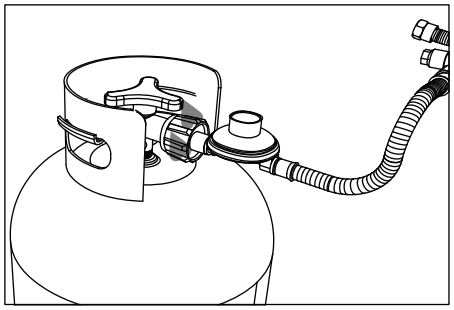

Regulator/Cylinder Connection

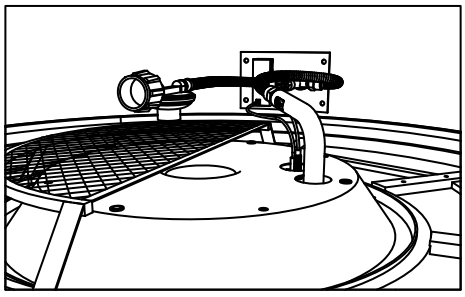

Operating (continued)

LIGHTING

CAUTION: Keep the outdoor gas appliance area clear and free from combustible materials, gasoline and other flammable vapors and liquids.

CAUTION: Do NOT obstruct the flow of combustion and ventilation air.

CAUTION: Check and clean burner/venturi tubes for insects and insect nests. A clogged tube can lead to a fire.

1. Make sure all labels, packaging and protective films have been removed from the outdoor fire pit.
2. Control knob must be in the “OFF” position (Figure 1).
3. Full open LP cylinder valve.
4. Press and hold electronic igniter button.
5. Press the control knob, turn counterclockwise to “Low” position, press and hold. When the burner lights, release the electronic igniter button (Figure 2).
6. Continue to depress the gas control knob for 30 seconds and then release. If the flame goes out, repeat the procedure.
7. Adjust the flame to the desired height with the gas control knob. Visually check the burner flames as picture below (Figure 3).
8. If the burner will not light with the electronic igniter, hold a lit long match or lit long butane lighter to the ignition area of the burner and continue with step 5.

WARNING: If the burner does not light within 10 seconds, turn the valve off and wait 5 minutes for gas to dissipate before repeating the procedure

WARNING: Surface of the fire pit can remain extremely hot for a period after use. Allow 45 minutes to cool to dissipate before repeating the procedure.

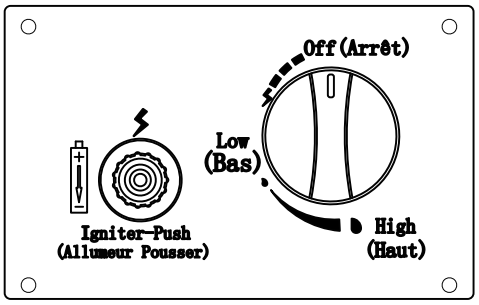

Figure 1

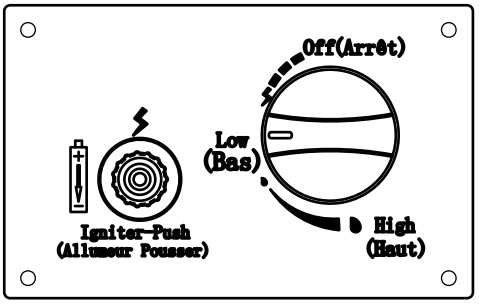

Figure 2

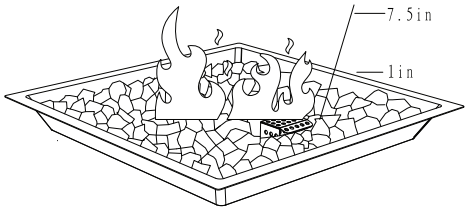

Figure 3

Shut Down

1. To extinguish burner depress control knob and continue to turn it clockwise to “OFF”
2. Turn cylinder valve clockwise to “OFF” and disconnect regulator when fire pit is not in use.

Maintenance

Storage between uses:

- □ Turn the control knob to “OFF” position.
- □ Disconnect LP source.
- □ Store heater upright in an area sheltered from direct contact with inclement weather (such as rain, sleet, hail, snow, dust and debris).
- □ If desired, cover heater to protect exterior surfaces and to help prevent build up in air passages.

NOTE: Wait until heater is cool before covering.

Storage during periods of extended inactivity or when transporting:

- □ Turn the control knob to “OFF” position.
- □ Disconnect LP source and move to a secure, well ventilated location outdoors. DO NOT store in a location that will exceed 125 ℉.
- □ Store heater upright in an area sheltered from direct contact with inclement weather (such as rain, sleet, hail, snow, dust and debris).
- □ If desired, cover heater to protect exterior surfaces and to help prevent build up in air passages.

NOTE: Wait until heater is cool before covering.

Care and Cleaning

To enjoy years of outstanding performance from your heater, make sure you perform the following maintenance activities on a regular basis:

- □ Whenever conduct hose/regulator inspection, pull out the door using handle on the door panel to gain access.
- □ Keep exterior surface clean.
- □ Use warm soapy water for cleaning. Never use flammable or corrosive cleaning agents.
- □ While washing your unit, be sure to keep the area around the burner dry at all times. If the gas control is exposed to water, do NOT try to use it. It must be replaced.
- □ Keep the appliance area free and clean from combustible materials, gasoline or other flammable vapors and liquids.
- □ At least once a year, the unit should be inspected for the presence of spiders, spider webs or other insects.
- □ Air flow must be unobstructed. Keep controls, burner, and circulating air passageways clean. Signs of possible blockage include:
  Gas odor with extreme yellow tipping of flame.
  Heater does NOT reach the desired temperature.
  Heat glow is excessively uneven.
  Heat makes popping noises.
- □ Spider and insects can nest in burner or orifices. This dangerous condition can damage heater and render it unsafe for use. Clean burner holes by using a heavy-duty pipe cleaner. Compressed air may help clear away smaller particles.
- □ Carbon deposits may create a fire hazard. Clean reflector, thermocouple, and emitter screen with a dry cloth if any carbon deposits develop.
- □ The burner is made from stainless steel, but extreme heat and a corrosive environment can cause surface corrosion to occur. This can be removed with a brass wire brush. Inspect the burner at least annually for cracks, insect nests, excessive corrosion or any other damage. If the burner is damaged, it must be replaced with a burner specified by the manufacturer before the appliance is put into operation.

Troubleshooting

PROBLEM	PROBLEM CAUSE	SOLUTION
The flame and heat are low when the valve is turned to high.	The propane lighting procedure was not followed correctly.	Ensure lighting procedure is followed carefully. The valve must be in the off position when the tank valve is turned on. Turn the tank on slowly to allow pressure to equalize. See Lighting Instructions in the Operating section.
Burners burn with yellow flame, accompanied by the smell of gas.	There is possibly a spider web or other debris.	Thoroughly clean the burner venturi. See the Maintenance section.
The burner will not light with the igniter, but will light with a match.	The battery is either dead or installed incorrectly.	Check the installation or replace with a new battery.
	There is a loose electrode wire or switch terminal wires.	Check that the electrode wire is firmly pushed onto the terminal on the back of the igniter. Check that the lead wires from the module to the ignition switch (if equipped) are firmly pushed onto their respective terminals.
The burner will not stay lit when control knob is released.	The knob is not being held in long enough.	The thermocouple must have time to heat up. Hold the knob in for 30 seconds after the burner lights, then release.
	It is too windy outside.	The unit will shut down if winds are greater than 10 mph (16 km/h). Either locate the fire pit to a different area or use when it is less windy.
	Lava rock or debris are in the ignition area of the burner preventing the thermocouple from being fully engulfed in flame.	Ensure there is no lava rock or other debris in the ignition area, and that the small hole below the thermocouple is unobstructed.
	Either the thermocouple or thermocouple connection is dirty.	Clean the thermocouple and clean the connection between the valve and thermocouple. Ensure the connection is properly tightened.
	Either the thermocouple or valve is faulty.	Replace thermocouple and/or valve.
The regulator is humming.	This is a normal occurrence on hot days.	This is not a defect. It is caused by internal vibrations in the regulator and does not affect the performance or safety of the gas heater. Humming regulator will not be replaced.
The valve is set to high but there is low heat output. There is also a rumbling noise and a fluttering blue flame at the burner surface.	There is not enough gas.	Check the gas level in the propane cylinder.
	The supply hose is pinched.	Reposition the supply hose as necessary.
	The burner orifice is either dirty or clogged.	Clean the burner orifice.
	There are spider webs or other matter in venturi tube.	Clean out the venturi tube.
	The propane regulator is in a “low flow” state.	Ensure the lighting procedure is followed carefully. All valves must be in the off position when the tank valve is turned on. Turn tank on slowly to allow pressure to equalize. See the Lighting Instructions in the Operating section.

Factory Information

Zhejiang Yimo Technology Co., Ltd

Add: No.2 Bixi Road, Xinbi street, Jinyun County,Lishui, Zhejiang, China

Made In China

