Installationmethod

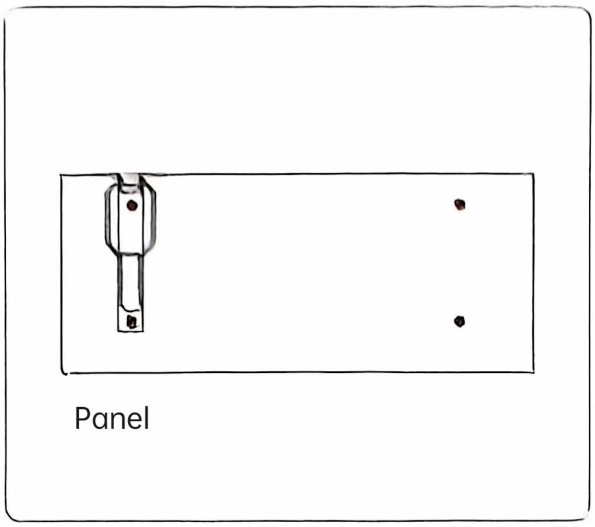

1. Prop up the support, align it with the screw holes on the panel,screw on the short self-tapping screws,andinstall the two supports in turn.

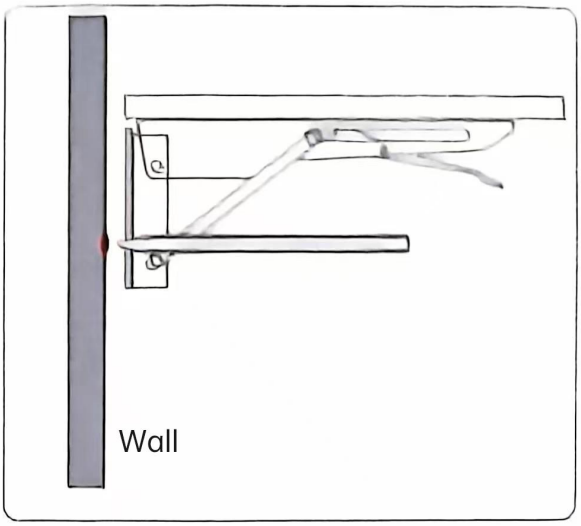

2.Take the shelf and mark the hole position on the wall with a pen.

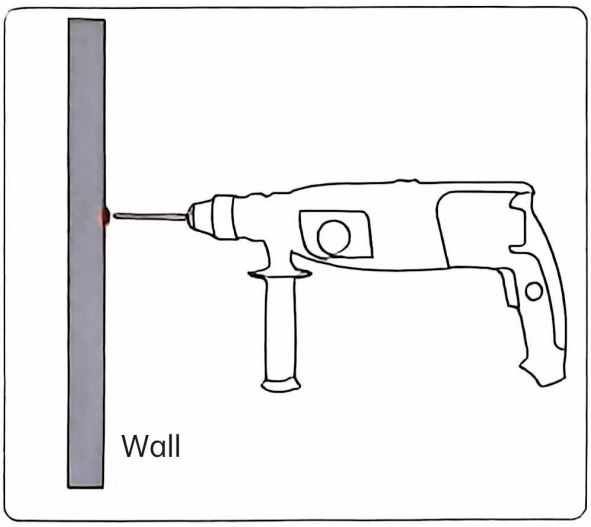

3.Drill a hole in the marked positionusing a 6MM hammer drill bit.

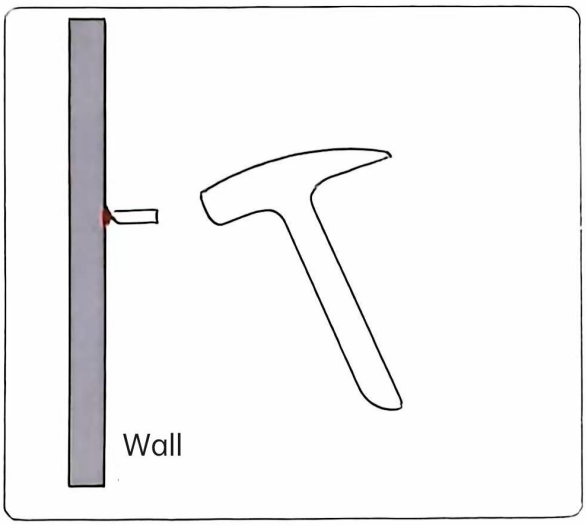

4. Drive the expansion tube into the hole, align the storage rack with the wall screw hole and screw on the long self-tapping screws.