ASSEMBLY INSTRUCTION

SKU CODE : BW00604

FULL SIZE BUNK BED

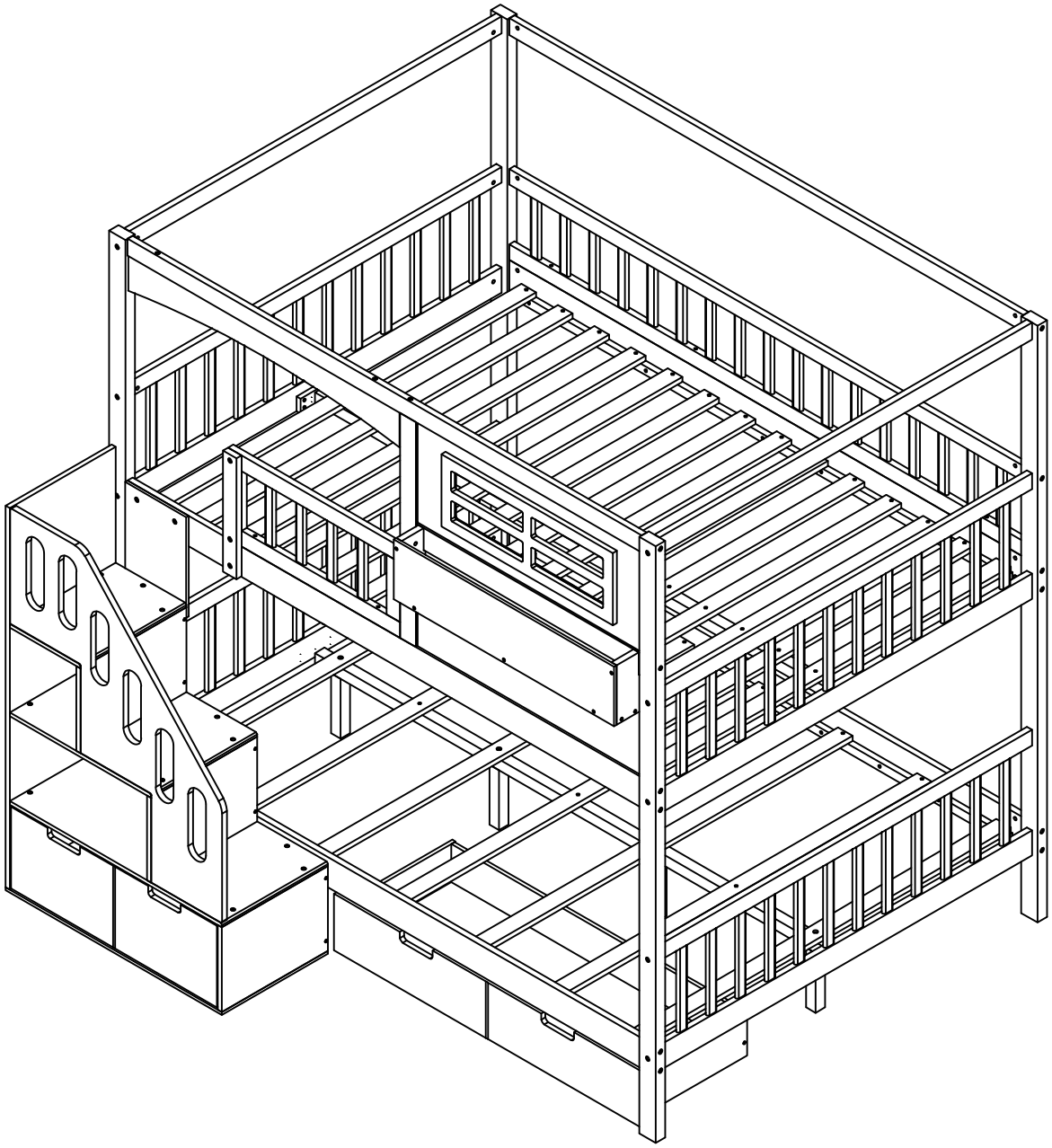

SAFETY WARNINGS

1. This bed is designed for use only mattress(es) meeting the following specifications on the upper bunk:

Upper bed

Bed Type	**Length**	**Width**	**Thickness**
Full Standard	***74"-75"***	**53 1/2"- 54"**	**6" max**

Lower bed

Bed Type	**Length**	**Width**	**Thickness**
Full Standard	***74"-75"***	**53 1/2"- 54"**	**6" max**

2. Replacement parts, including additional guardrails, maybe obtained from any of our (ANH THUAN PHAT IMPORT-EXPORT COMPANY LIMITED) dealers.
3. Follow the information on the warnings appearing on the upper bunk bed end structure and on the carton. Do not remove warning label from bed.
4. Always use the recommended size mattresses or mattress supports, or both, to help prevent the likelihood of entrapment or falls.
5. Surface of the mattress must be at least 5". (127 mm) below the upper edge of guardrails.
6. Do not allow children under 6 years of age to use the upper bunk.
7. Periodically check and ensure that the guardrail, ladder, and other components are in their proper position, free from damage, and that all connectors are tight.
8. Do not allow horseplay on or under the bed and prohibit jumping on the bed
9. Always use the ladder for entering and leaving the upper bunk.
10. Do not use substitute parts. Contact the manufacturer or dealer for replacement parts.
11. Use of a night light may provided added safety precaution for a child using the upper bunk.
12. Always use guardrails on both long sides of the upper bunk. If the bunk bed will be placed next to the wall, the guardrail that runs the full length of the bed should be placed against the wall to prevent entrapment between the bed and wall.
13. The use of water or sleep flotation mattresses is prohibited.
14. STRANGULATION HAZARD - Never attach or hang items to any part of the bunk bed that are not designed for use with the bed; for example, but not limited to, hook, belts and jump ropes.
15. Keep these instructions for future reference
16. Prohibit more than one person on upper bunk.
17. We recommend assembling your bunk bed on the shipping carton to protect your floor or carpet.
18. Be certain all staples are out of the box before beginning assembly on the shipping carton.

SAFETY WARNINGS

1.At the beginning :
Tighten all hardware.
Check metal parts for rust. If found, sand and repaint using a non-lead-based paint meeting the requirements of 16 CFR 1303.
Check all wood members for deterioration and splinters. Sand down splinters and replace deteriorating wood members.
Rake and check depth of loose fill protective surfacing materials to prevent compaction and to maintain appropriate depth. Replace as necessary.

2. Twice a month
Tighten all hardware.
Rake and check depth of loose fill protective surfacing materials to prevent compaction and to maintain appropriate depth. Replace as necessary.
3. Owners shall be responsible for maintaining the legibility of the warning labels.
4. Disposal Instructions-
There shall be instructions advising the owner to disassemble and dispose of the playground equipment in such a way that no unreasonable hazards will exist at the time the playground equipment is discarded.
5. The instructions shall also include the information found in Section 4 of the United States Consumer Product Safety Commission's (USCPSC) Outdoor Home Playground Safety Handbook or specific surfacing guidelines for the product consistent with the USCPSC Handbook. A copy of this section may be found in Appendix X2.
6. Observing the following statements and warnings reduces the likelihood of serious or fatal injury.
7. Specifying the number and weight of occupants that may safely use the equipment singly or simultaneously,
8. Recommending on-site adult supervision for children of all ages,
9. Warning the owner to instruct children not to use the equipment in a manner other than intended,
10. Warning the owner to instruct children not to get off equipment while it is in motion,
11. Warning the owner not to allow children to wear inappropriate items, such as but not limited to, loose fitting clothing, hood and neck drawstrings, scarves, cord-connected items, capes and ponchos. These items can cause death by strangulation.
12. Warning the owner to instruct children not to climb when the equipment is wet.
13. Warning the owner to instruct children not to attach items to the playground equipment that are not specifically designed for use with the equipment, such as, but not limited to, jump ropes, clothesline, pet leashes, cables and chain as they may cause a strangulation hazard
14. Warning the owner to instruct children to remove their bike or other sports helmet before playing on the playground equipment.
15. Warning the owner to dress children with well-fitting and full foot enclosing footwear. Examples of inappropriate footwear are clogs, flip flops, and sandals.
16. Place the equipment on level ground, not less than 6 ft (1.8 m) from any structure or obstruction such as a fence, garage, house, overhanging branches, laundry lines, or electrical wires
17. Do not install home playground equipment over concrete, asphalt, packed earth, grass, carpet, or any other hard surface. A fall onto a hard surface can result in serious injury or death to the equipment user
18. To prevent serious injury, cautionary statements shall be included which warn that children must not use the equipment until properly installed.

ASSEMBLY INSTRUCTION

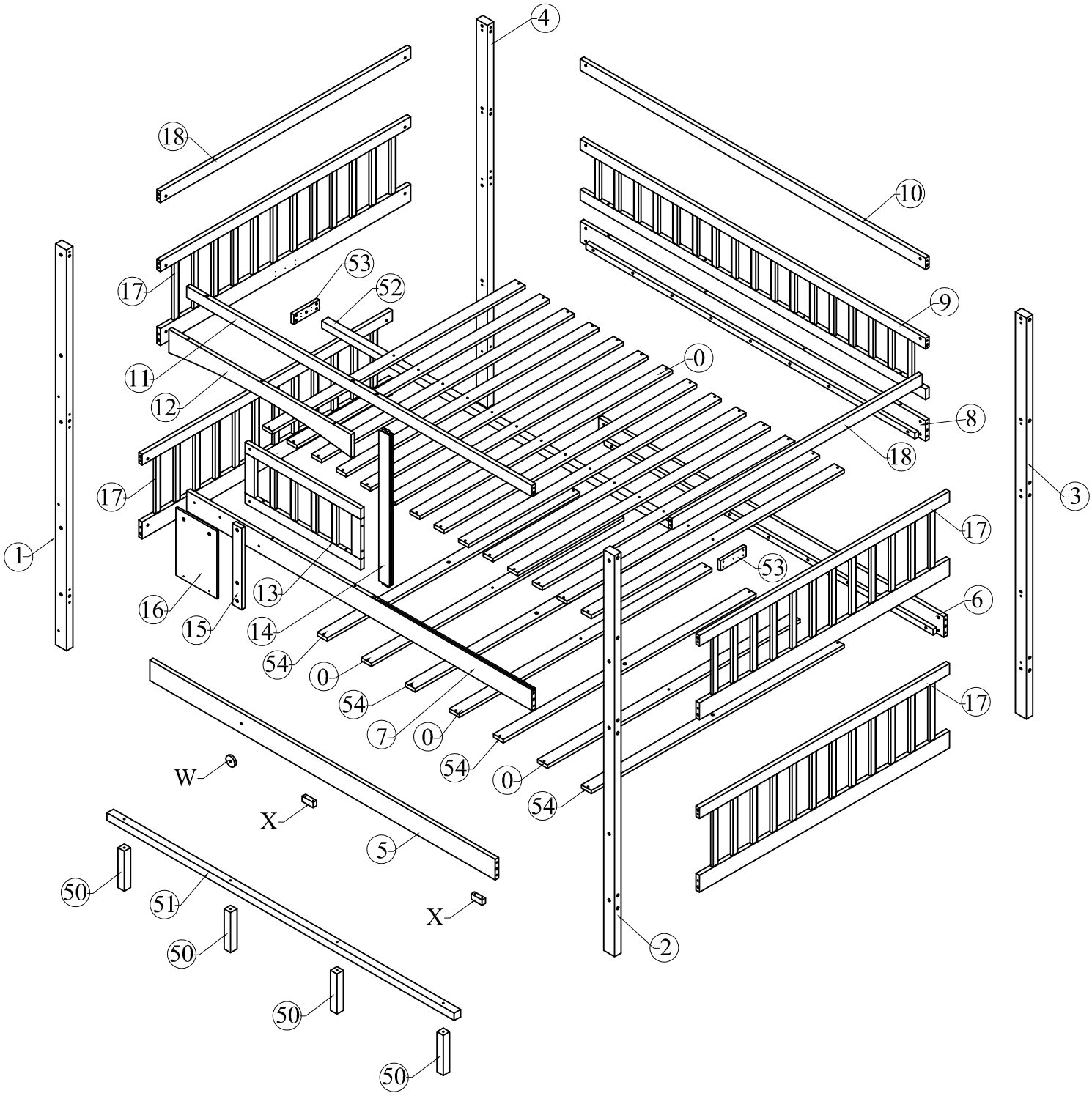

ASSEMBLY INSTRUCTION

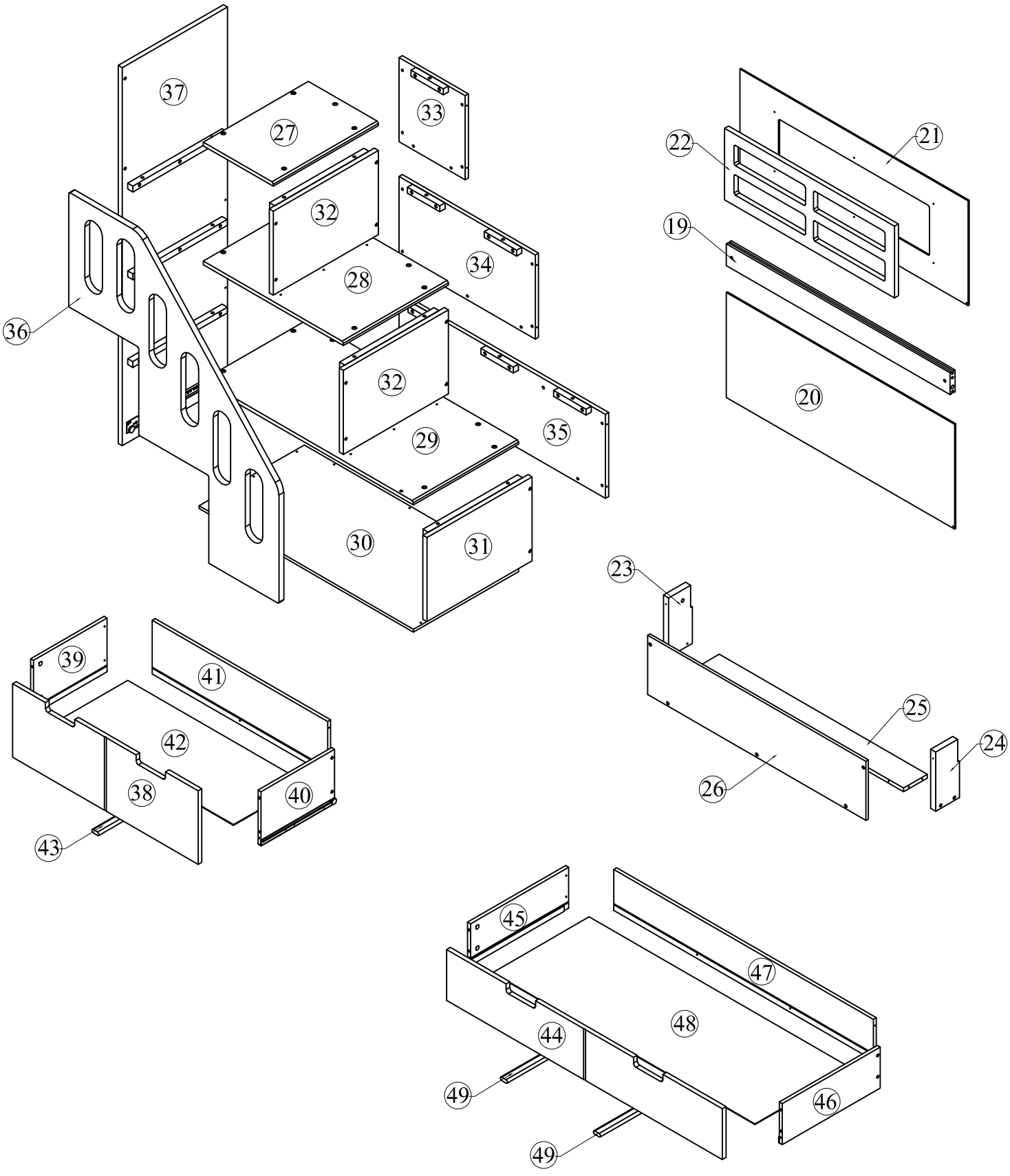

Part List (Box 1 - BW00604-1)

1 x 1 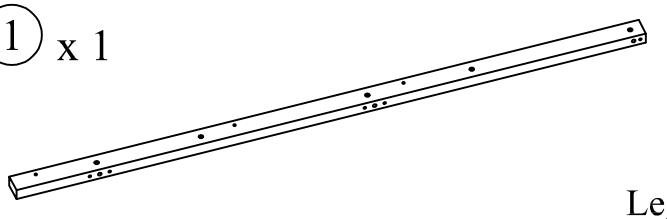 Leg	2 x 1 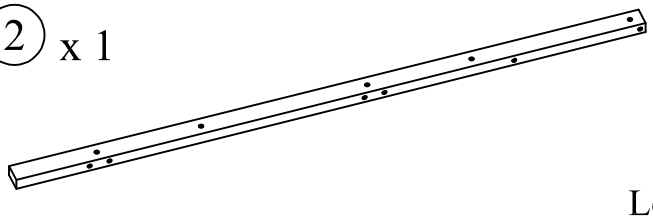 Leg
3 x 1 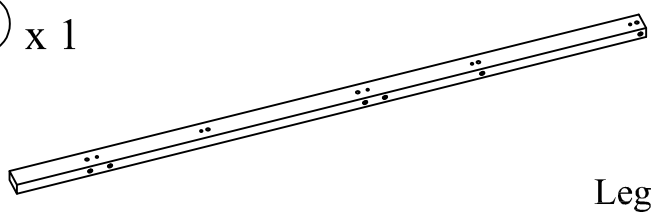 Leg	4 x 1 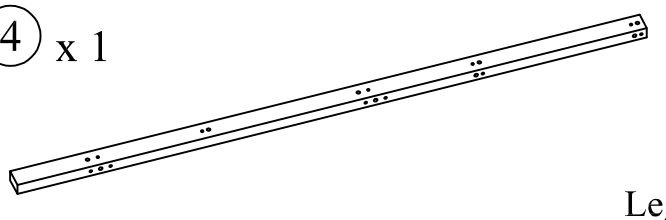 Leg
5 x 1 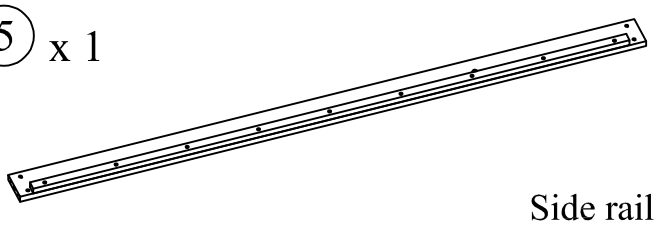 Side rail	6 x 1 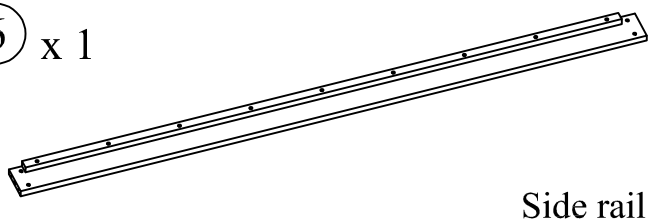 Side rail
7 x 1 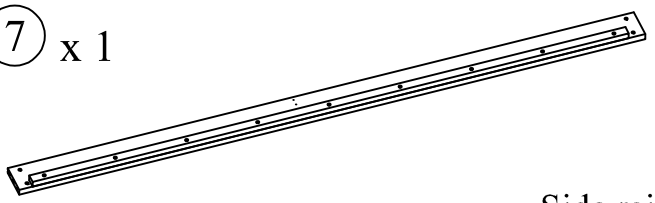 Side rail	8 x 1 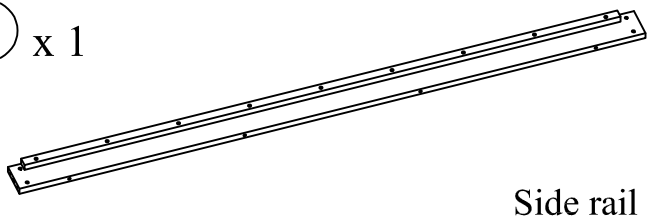 Side rail
9 x 1 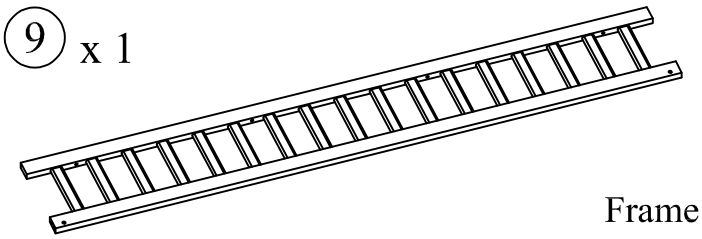 Frame	10 x 1 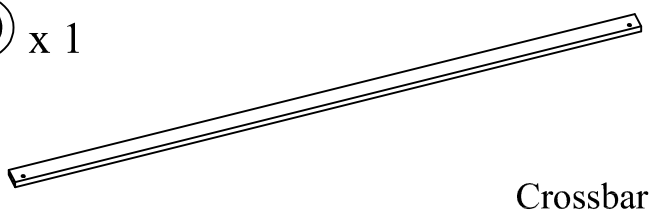 Crossbar
11 x 1 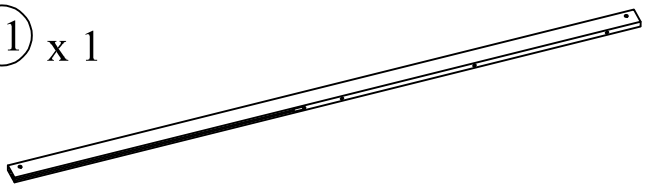 Crossbar	13 x 1 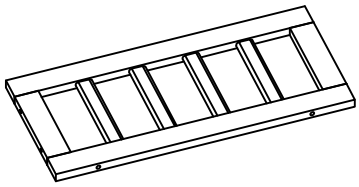 Frame
38 x 1 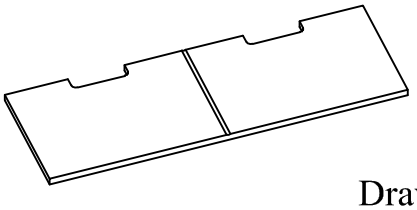 Drawer Front	51 x 1 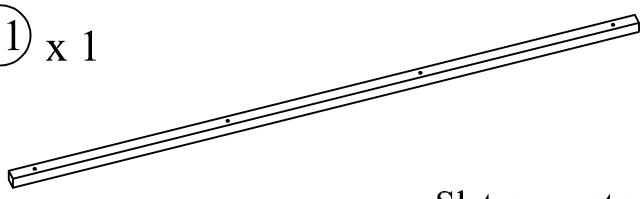 Slat support rail
52 x 1 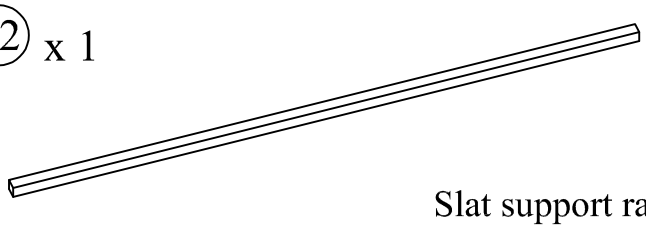 Slat support rail	

Part List (Box 2 - BW00604-2)

0 x 17 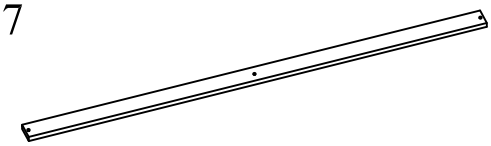 Slats	14 x 1 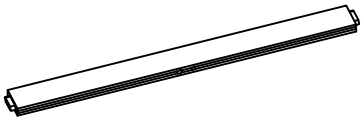 Vertical connector
15 x 1 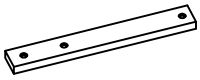 Vertical connector	17 x 4 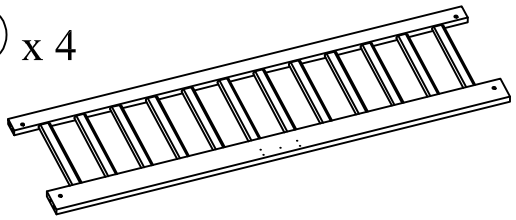 Frame
18 x 2 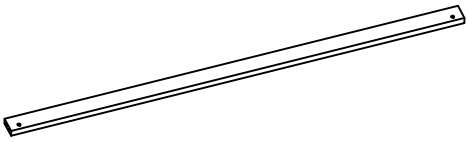 Crossbar	19 x 1 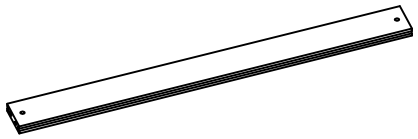 Crossbar
44 x 1 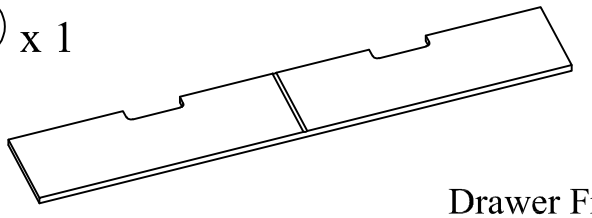 Drawer Front	47 x 1 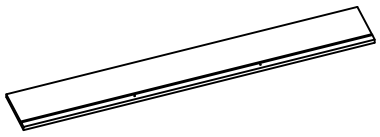 Drawer Back
48 x 1 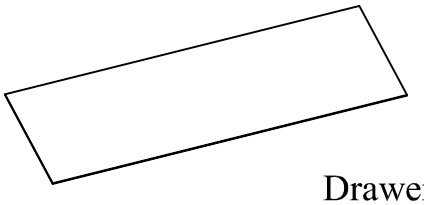 Drawer Bottom	53 x 2  Wood Spacer
54 x 4 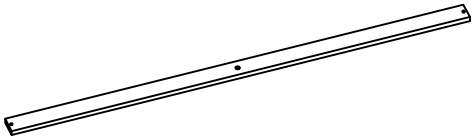 Slats	

Part List & Hardware List (Box 3 - BW00604-3)

(12) x 1 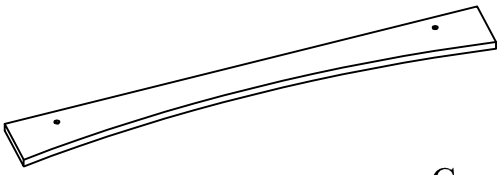 Crossbar	(16) x 1 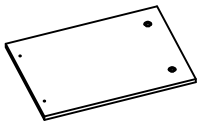 Panel
(20) x 1 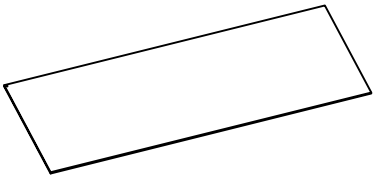 Panel	(21) x 1 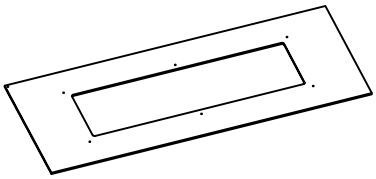 Panel
(22) x 1 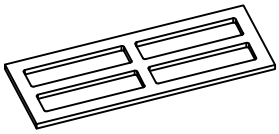 Frame	(23) x 1  Side Panel
(24) x 1 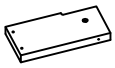 Side Panel	(25) x 1 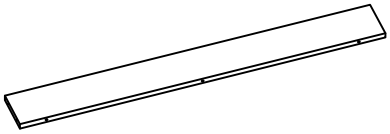 Bottom Panel
(26) x 1 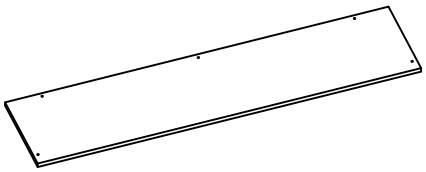 Front Panel	(27) x 1 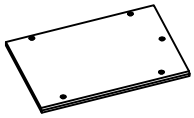 Panel
(28) x 1 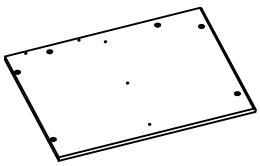 Panel	(29) x 1 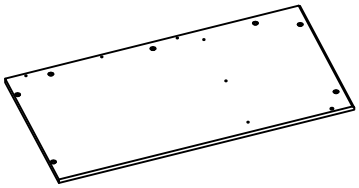 Panel
(30) x 1 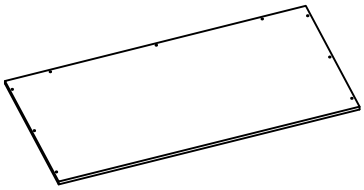 Panel	(31) x 1 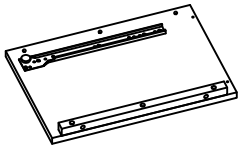 Panel
(32) x 2 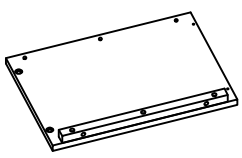 Panel	(33) x 1 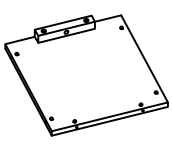 Panel

Part List & Hardware List (Box 3 - BW00604-3)

34 x 1 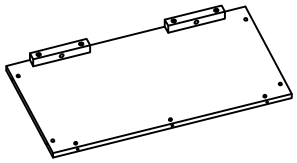 Panel	35 x 1 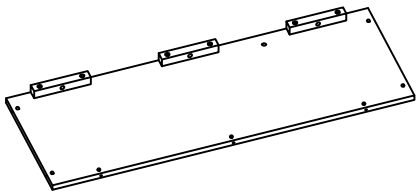 Panel
36 x 1 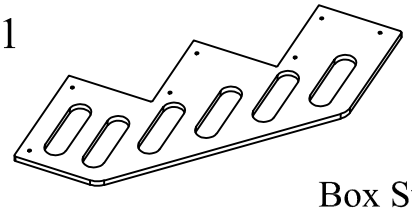 Box Staircase Panel	37 x 1 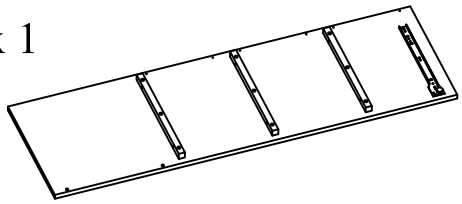 Back Panel
39 x 1 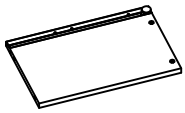 Drawer Side	40 x 1 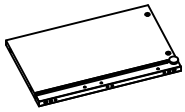 Drawer Side
41 x 1 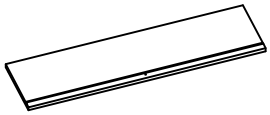 Drawer Back	42 x 1 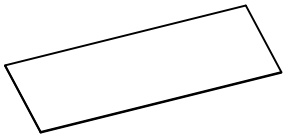 Drawer Bottom
43 x 1  Drawer Bottom Support	45 x 1  Drawer Side
46 x 1  Drawer Side	49 x 2  Drawer Bottom Support
50 x 4  Support Leg	

Hardware List (Box 3 - BW00604-3)

No.	OUTLOOK	DESC	QTY
A	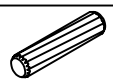	Dowel Ø10*40mm	37
B		Bolts 1/4"*20mm	02
C		Bolts 1/4"*25mm	18
D		Bolts 1/4"*30mm	04
E		Bolts 1/4"*60mm	09
F		Bolts 1/4"*70mm	12
G		Bolts 1/4"*80mm	23
H	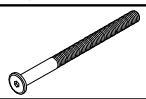	Bolts 1/4"*100mm	02
I	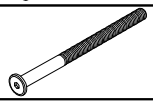	Bolts 1/4"*110mm	25
J		Cross dowel 1/4"*13mm	59
K		Hex bolts 1/4"*15mm	01
L		Round Head Screw #7*15mm	14
M		Screws #6*12mm	22
N		Screws #7*15mm	06
O		Screws #8*30mm	75
P		Screws #8*35mm	48
Q		Screws #8*40mm	04
R		Patt U	02
S		Connecting Bolt	08
T		Base L	03

ASSEMBLY TOOLS REQUIRED (NOT INCLUDED)



Hardware List (Box 3 - BW00604-3)

No.	OUTLOOK	DESC	QTY
U		Wheels	04
V		Metal bracket	01
W		Wood pad	01
X		Wood stop	02
Y		Allen key 60*22*4mm	02

ASSEMBLY TOOLS REQUIRED (NOT INCLUDED)



STEP 1

A		01
I	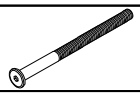	02
J		02
N		04
V		01

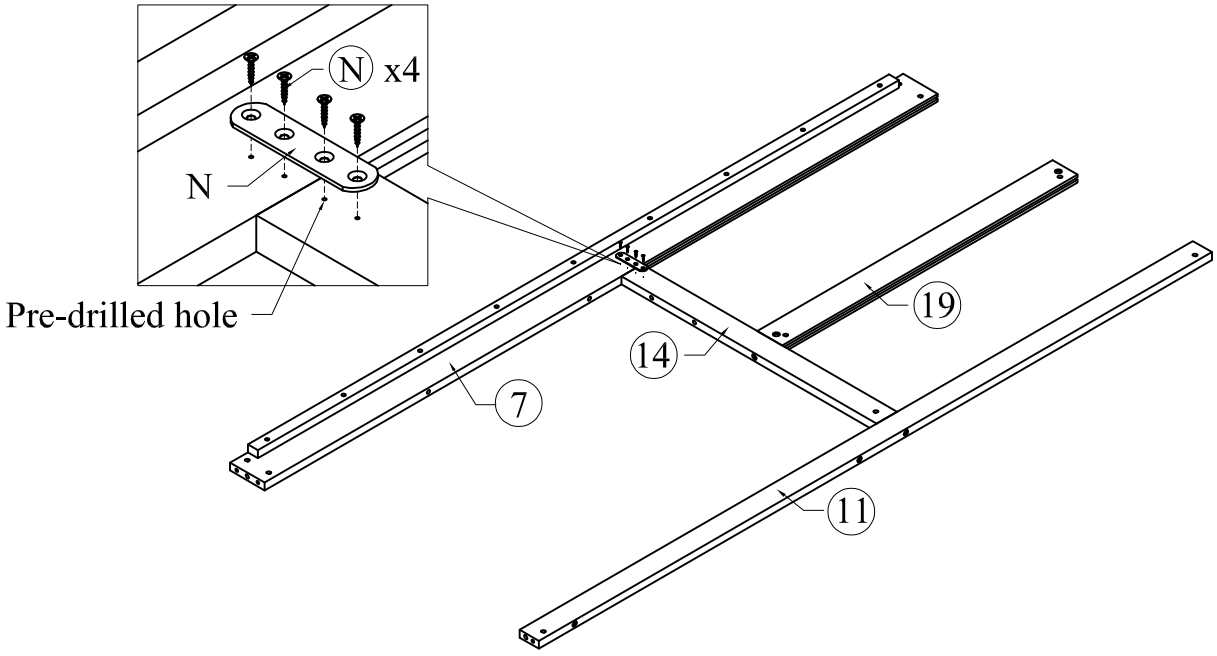

STEP 2

Slide the panels into the pre-cut grooves on parts 7, 11, and 19, as shown.

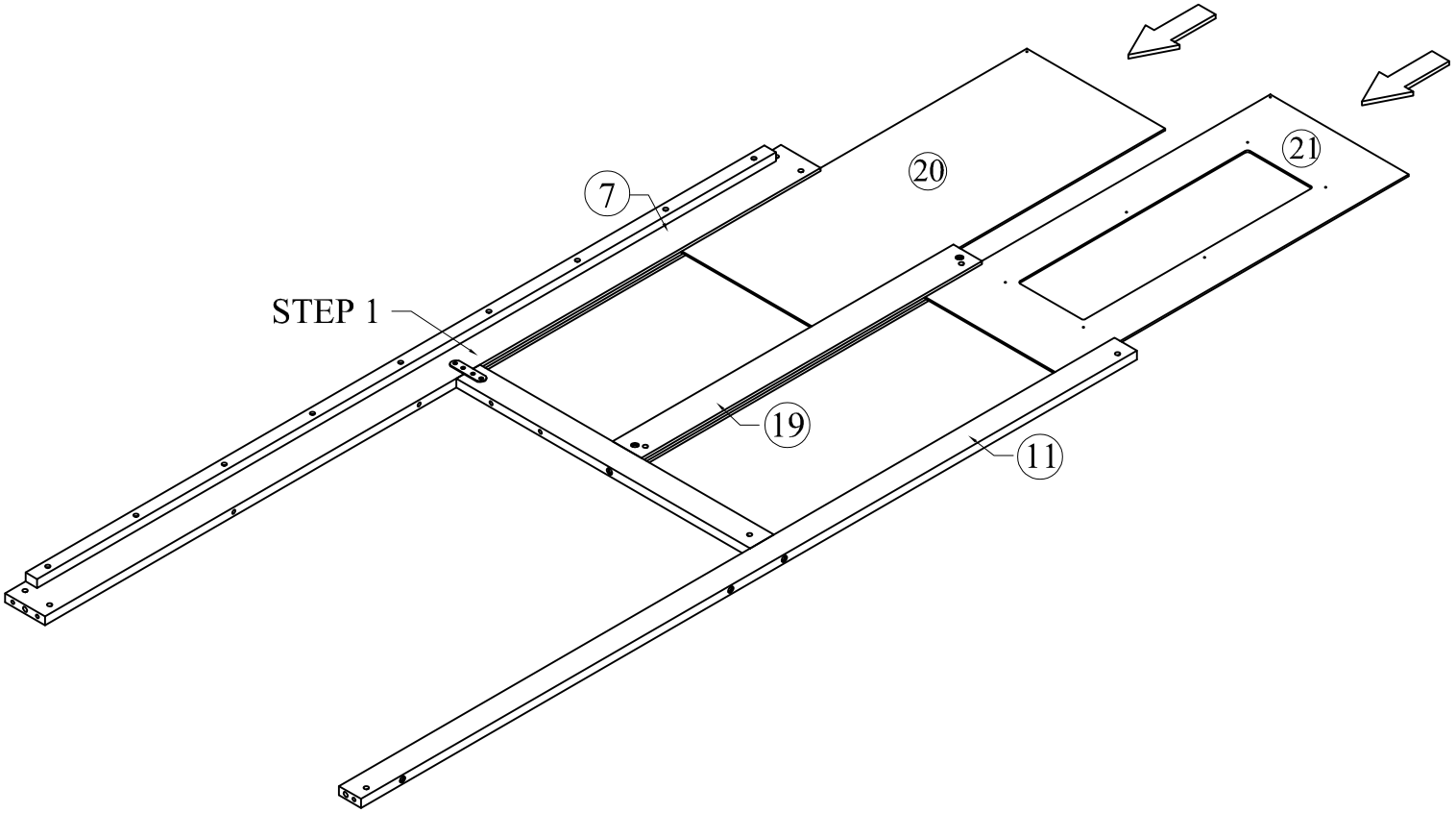

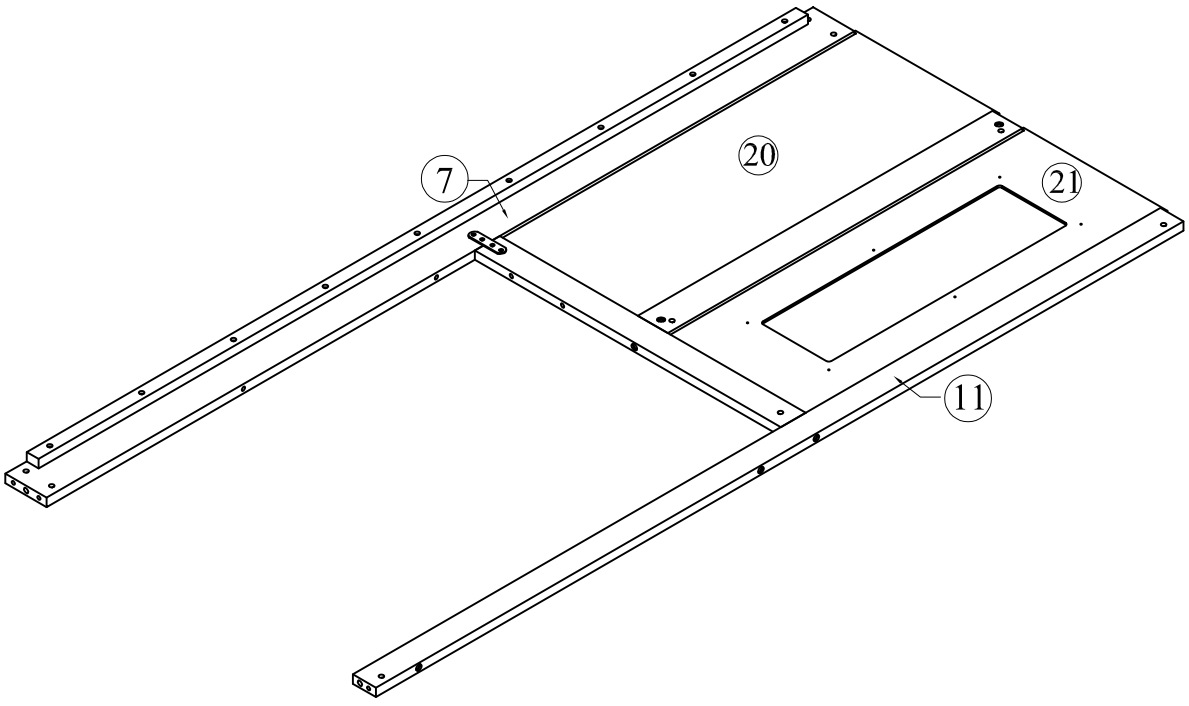

STEP 3

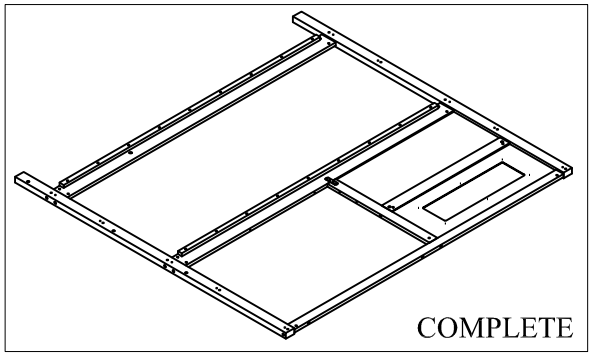

A		07
I	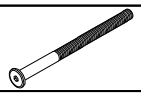	11
J		11

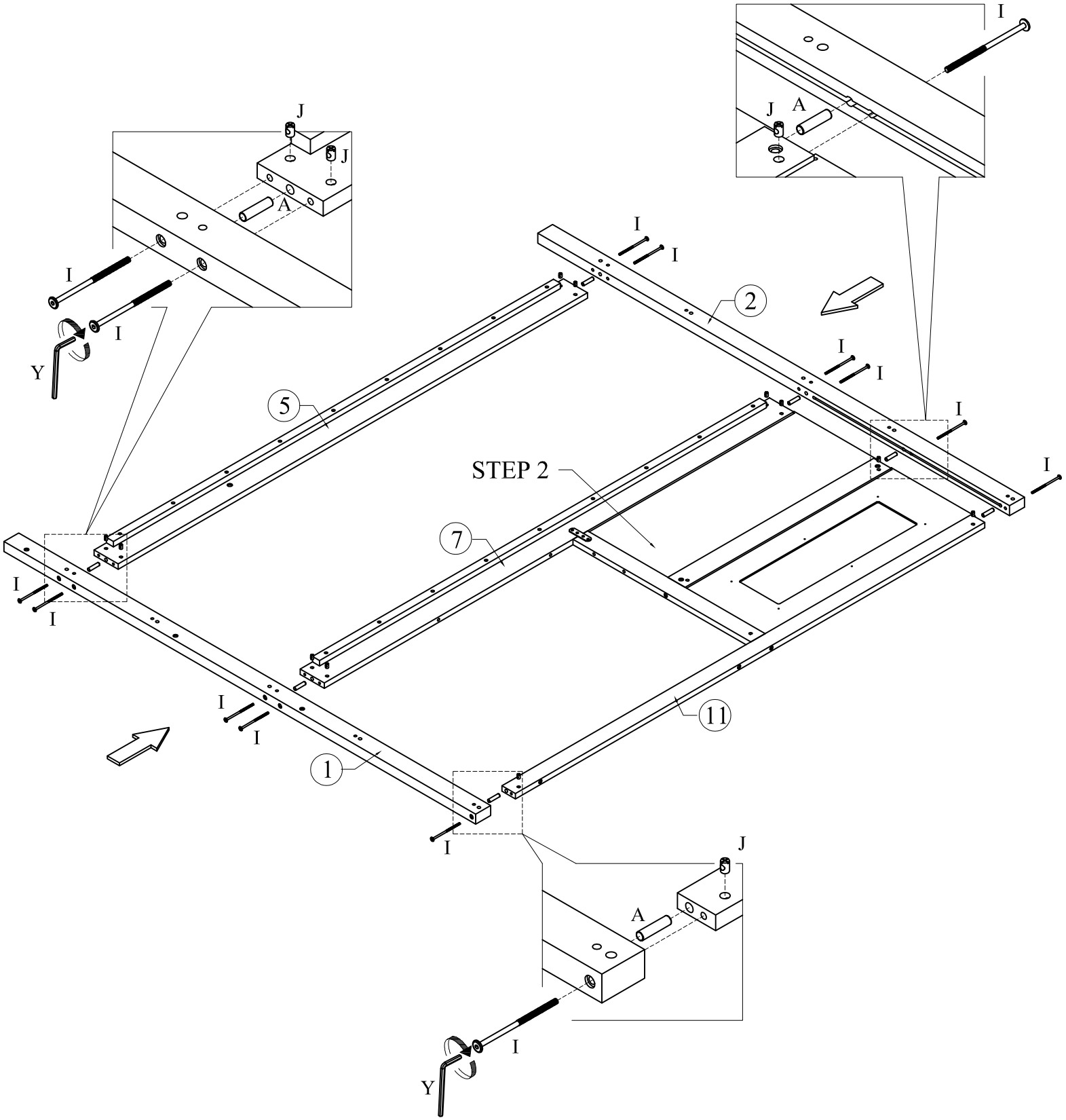

STEP 4

F	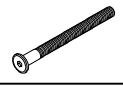	04

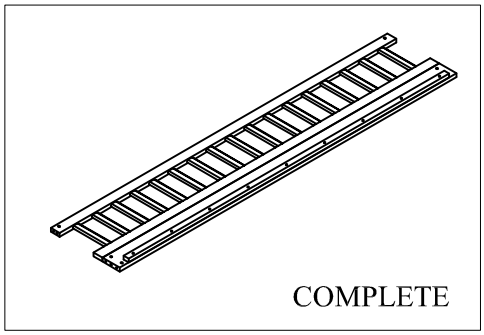

COMPLETE

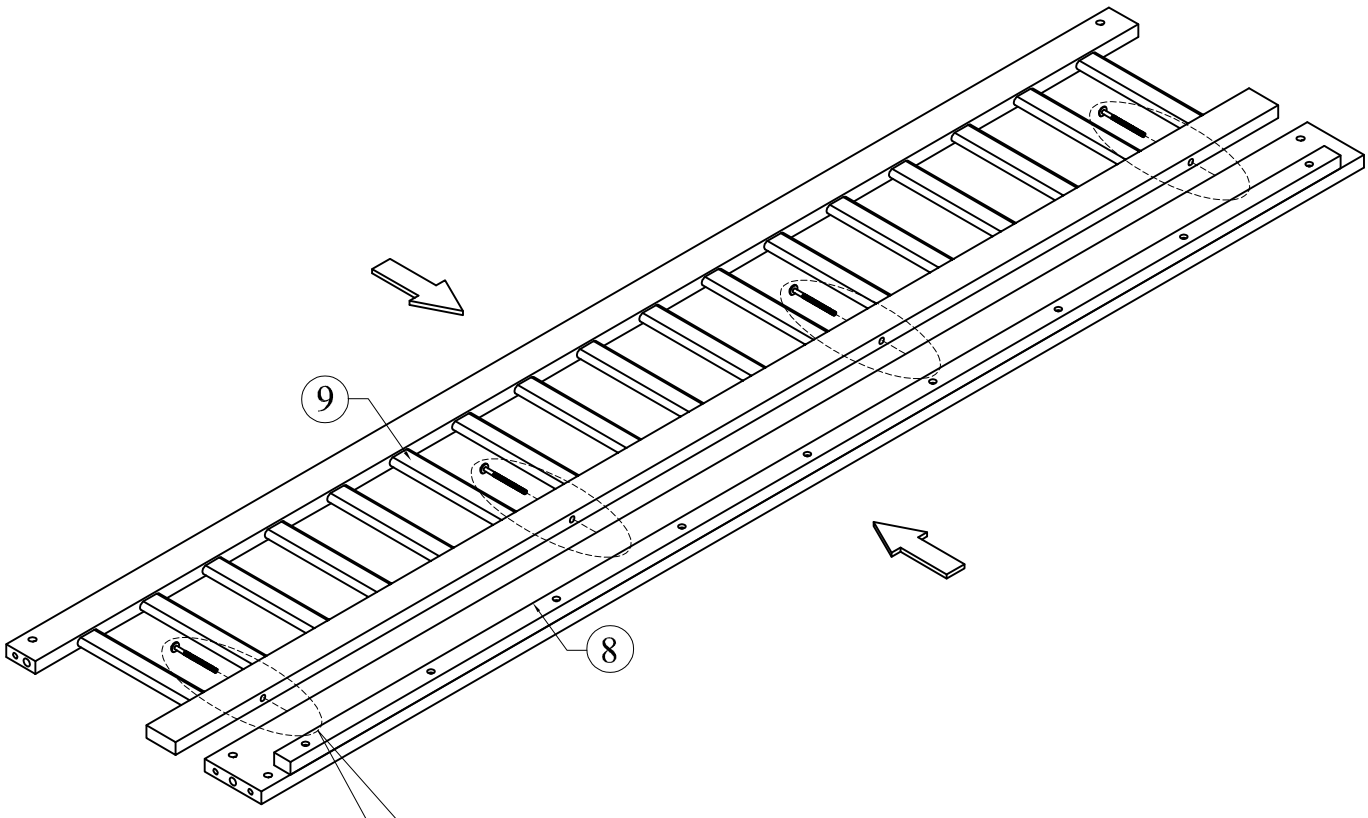

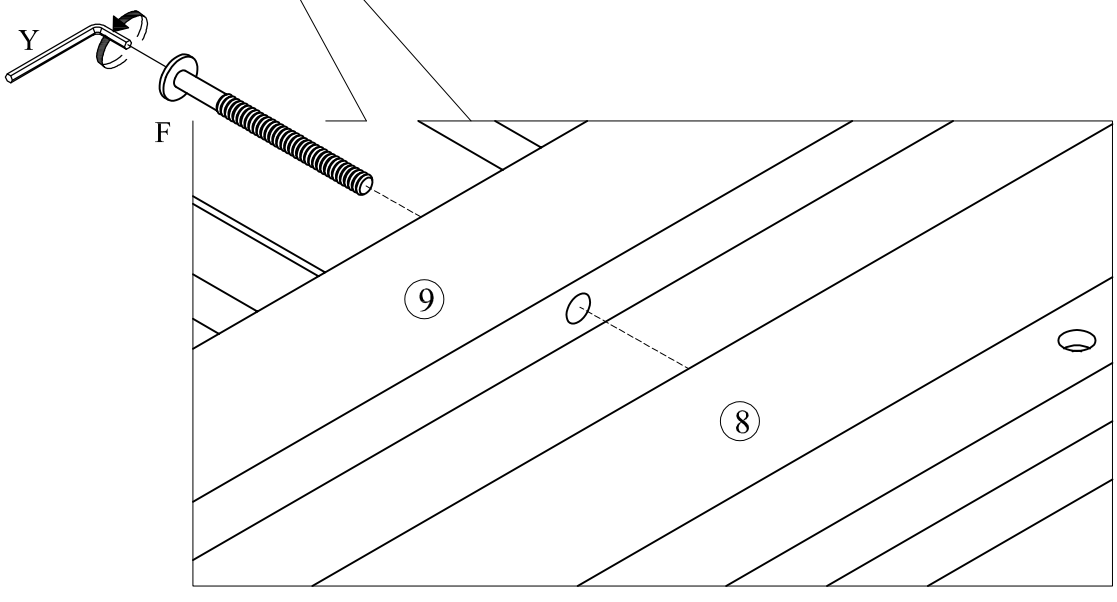

STEP 5

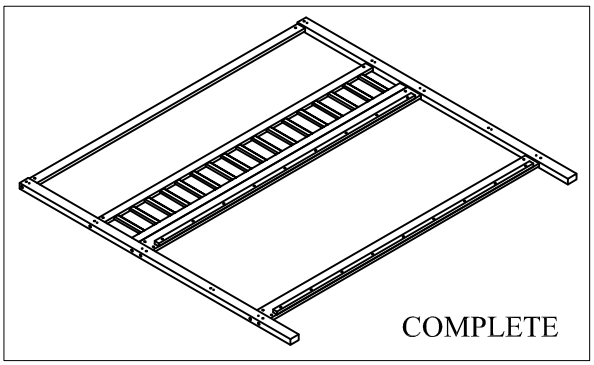

A		08
I	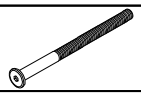	12
J		12

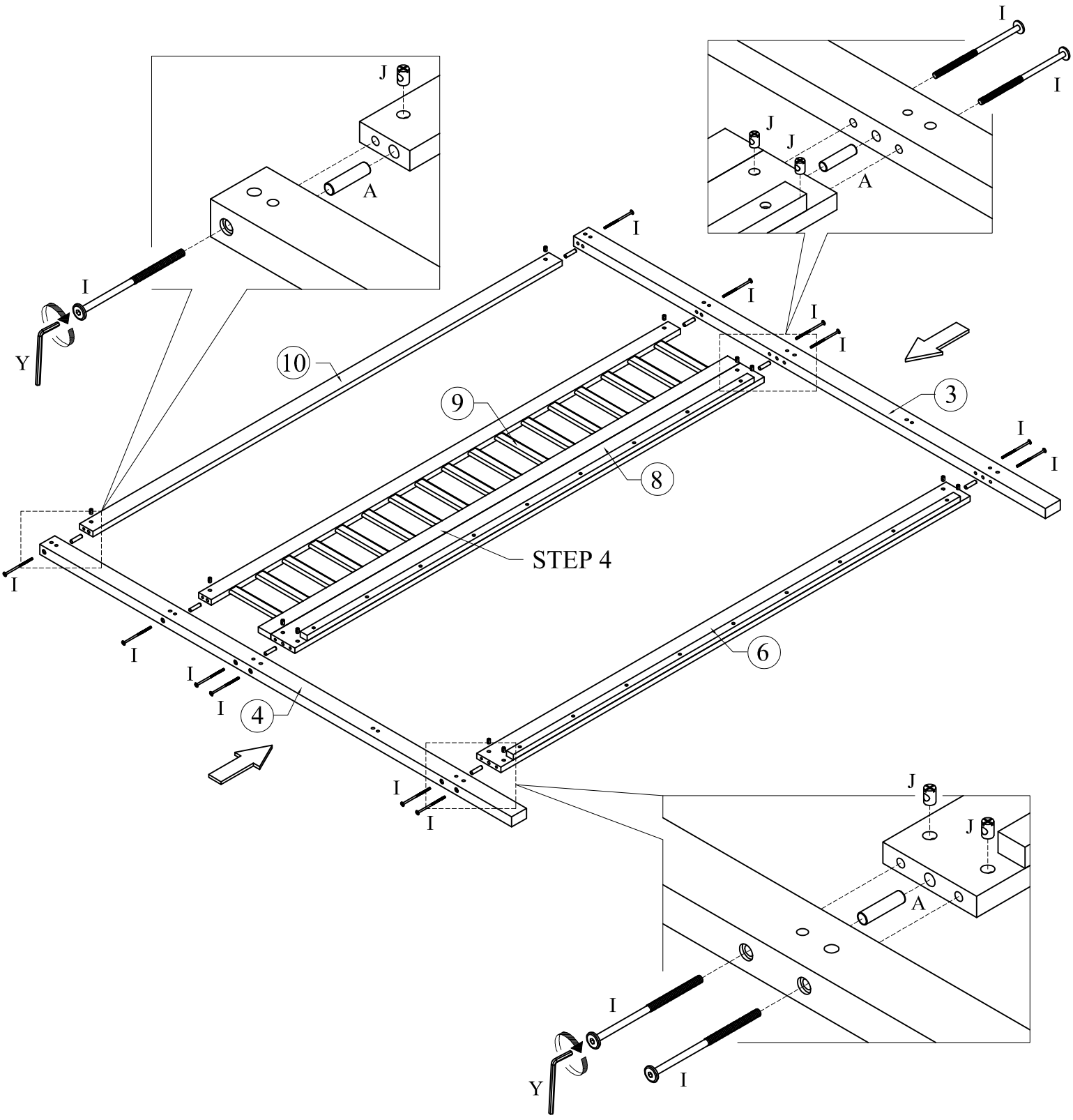

STEP 6

A		20
G	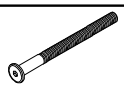	20
J		20

STEP 7

A		01
H	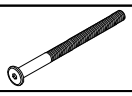	02
J		02

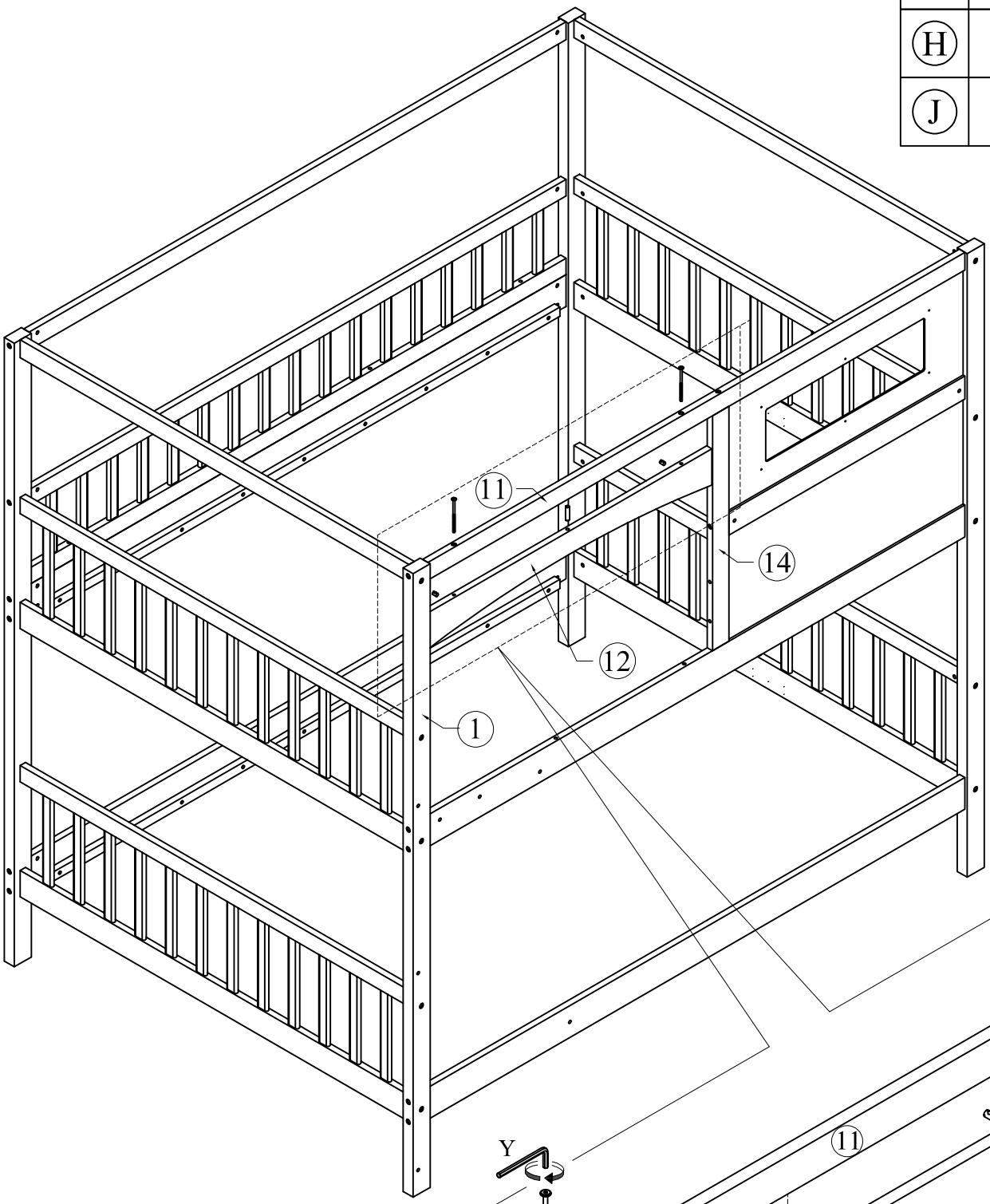

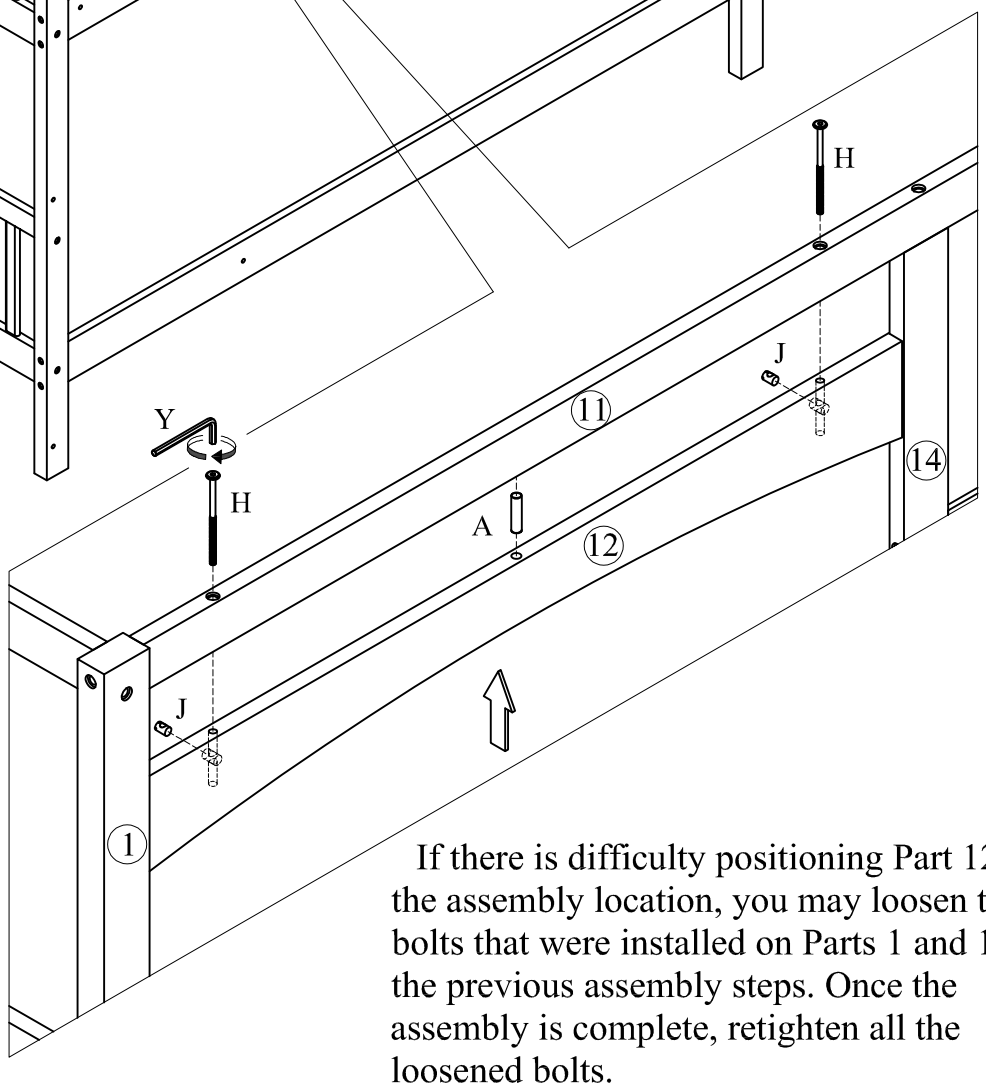

If there is difficulty positioning Part 12 into the assembly location, you may loosen the bolts that were installed on Parts 1 and 11 in the previous assembly steps. Once the assembly is complete, retighten all the loosened bolts.

STEP 8

F	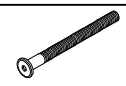	04

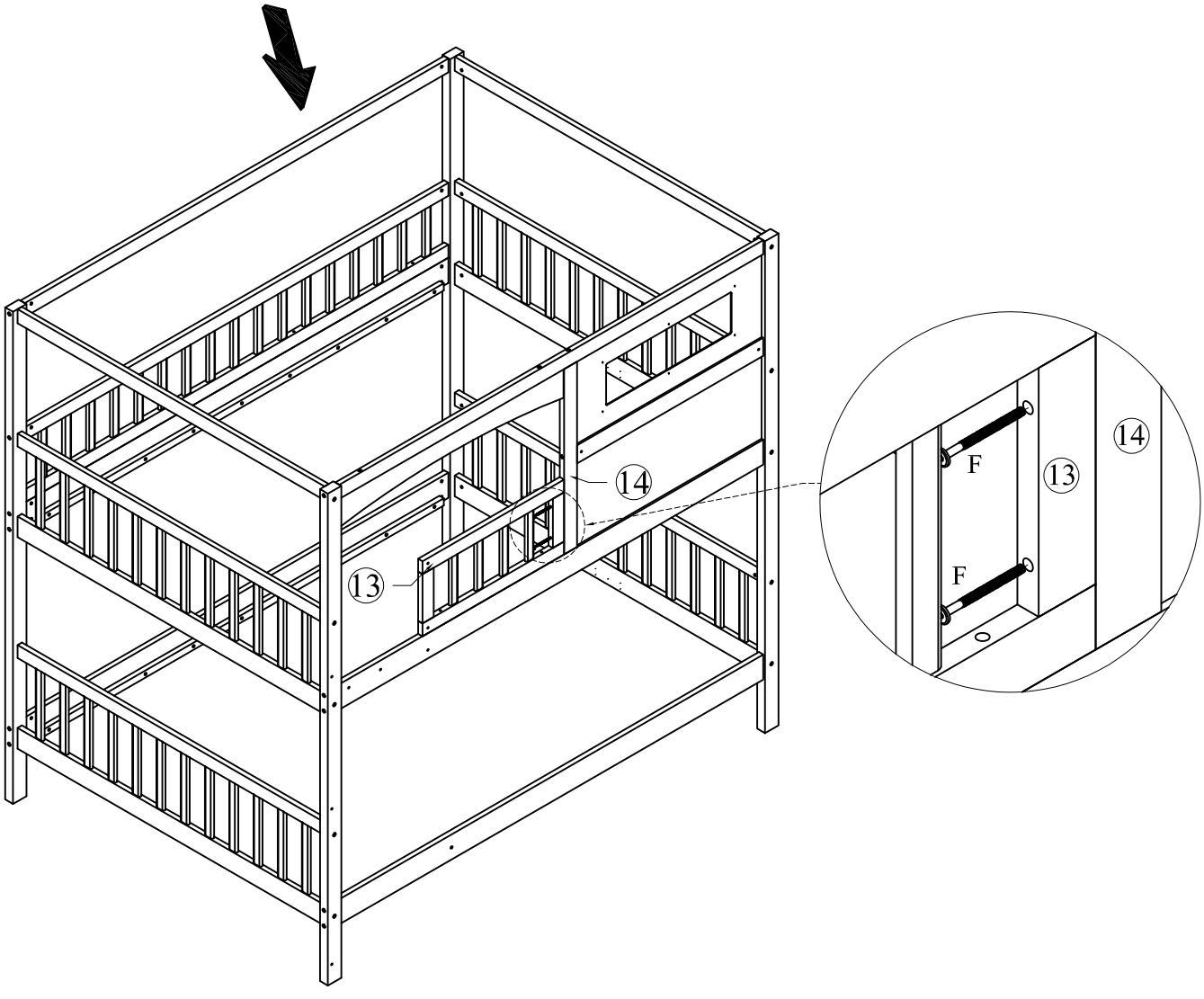

STEP 9

Ⓓ		03

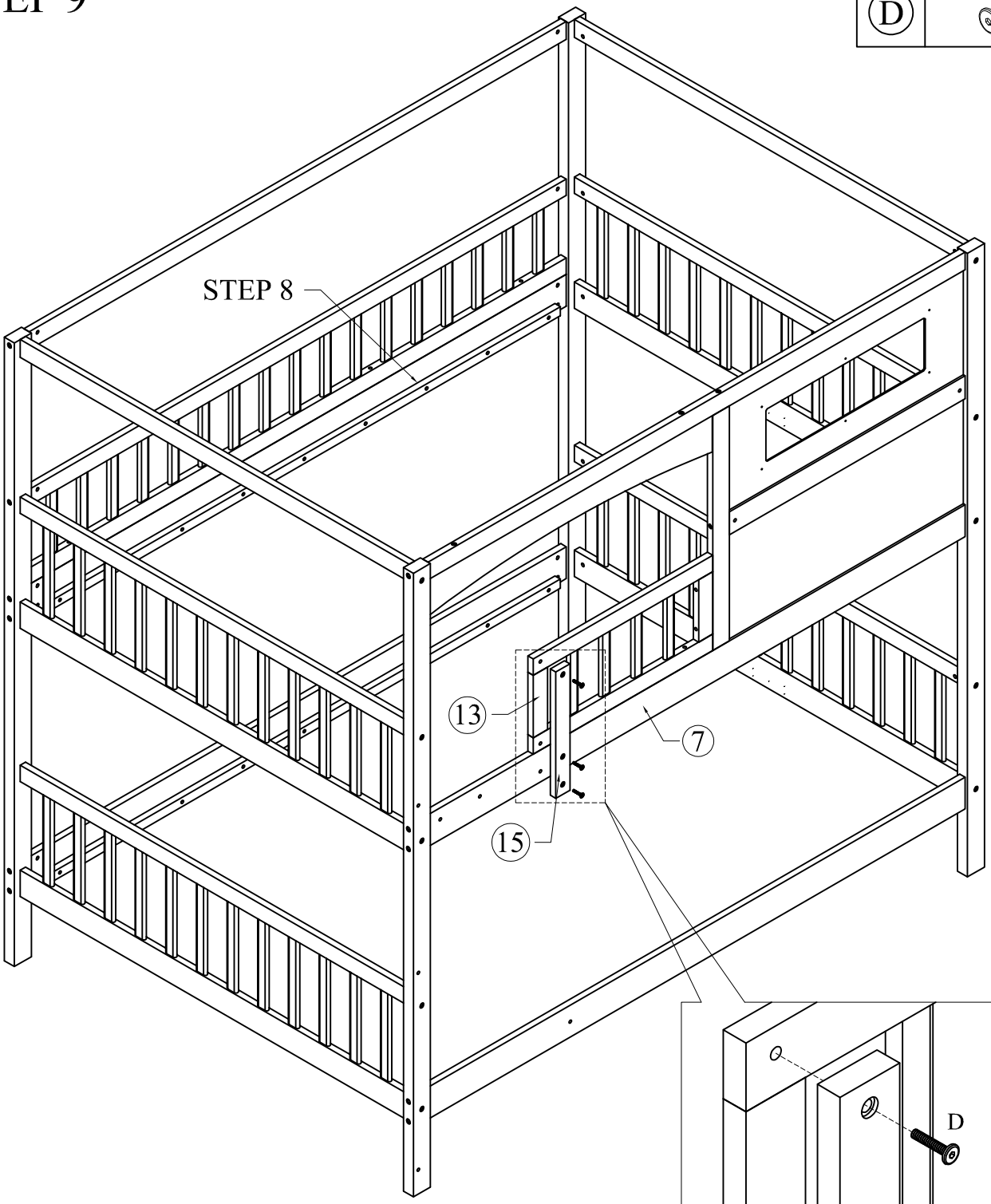

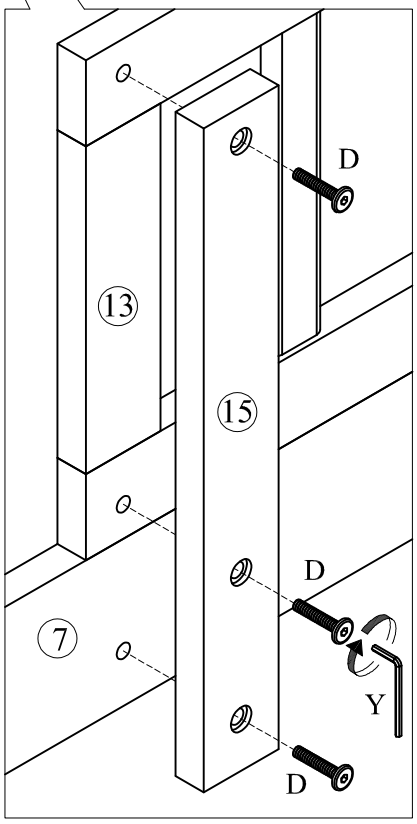

STEP 10

L		06

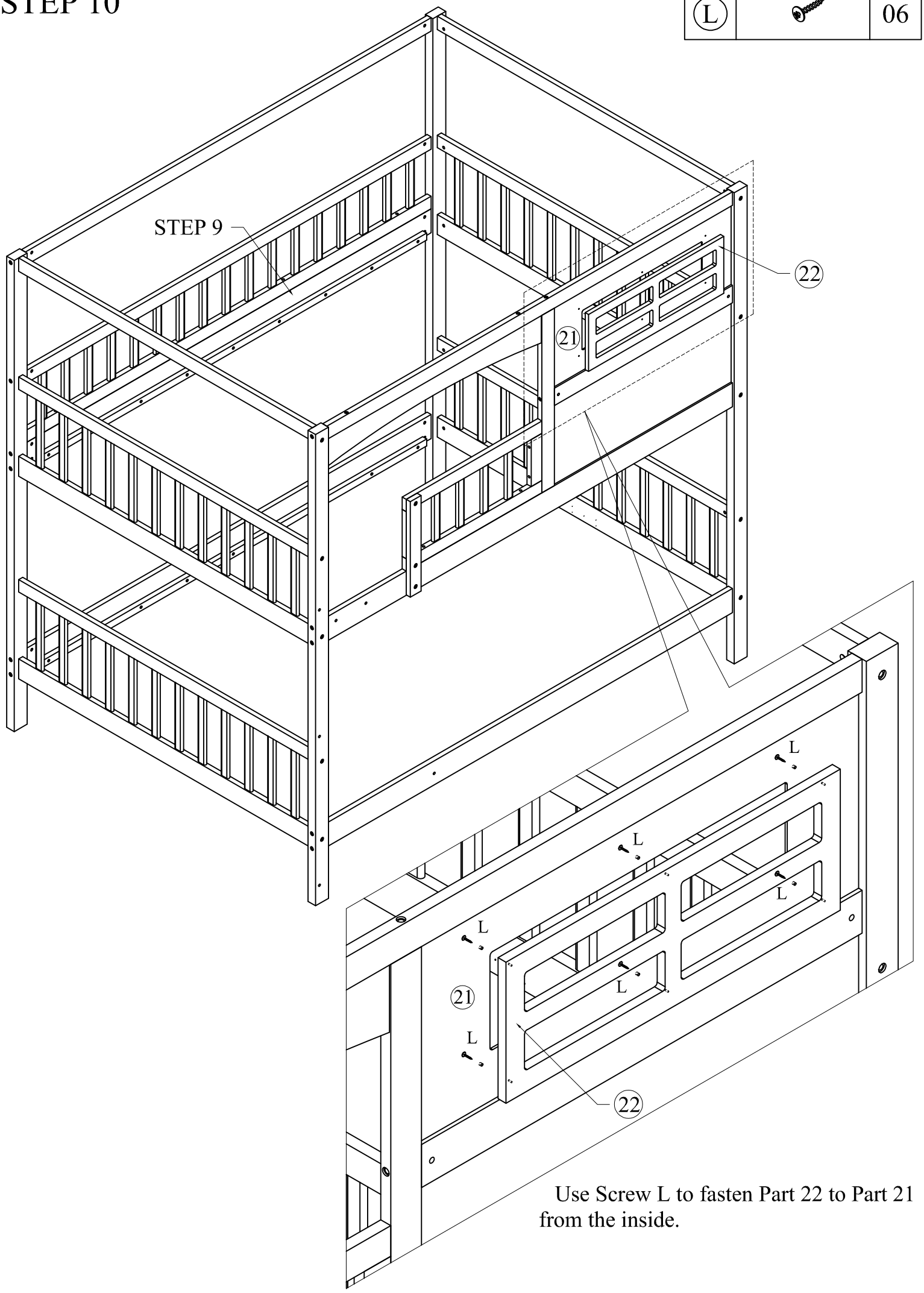

Use Screw L to fasten Part 22 to Part 21 from the inside.

STEP 11

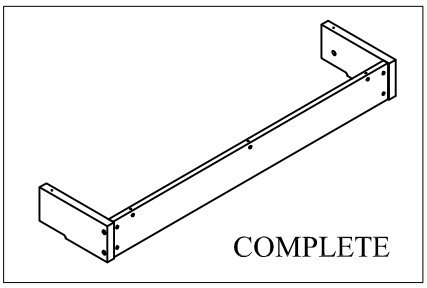

Q	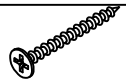	04

STEP 12

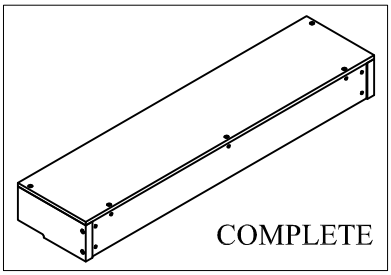

O		02
P		03

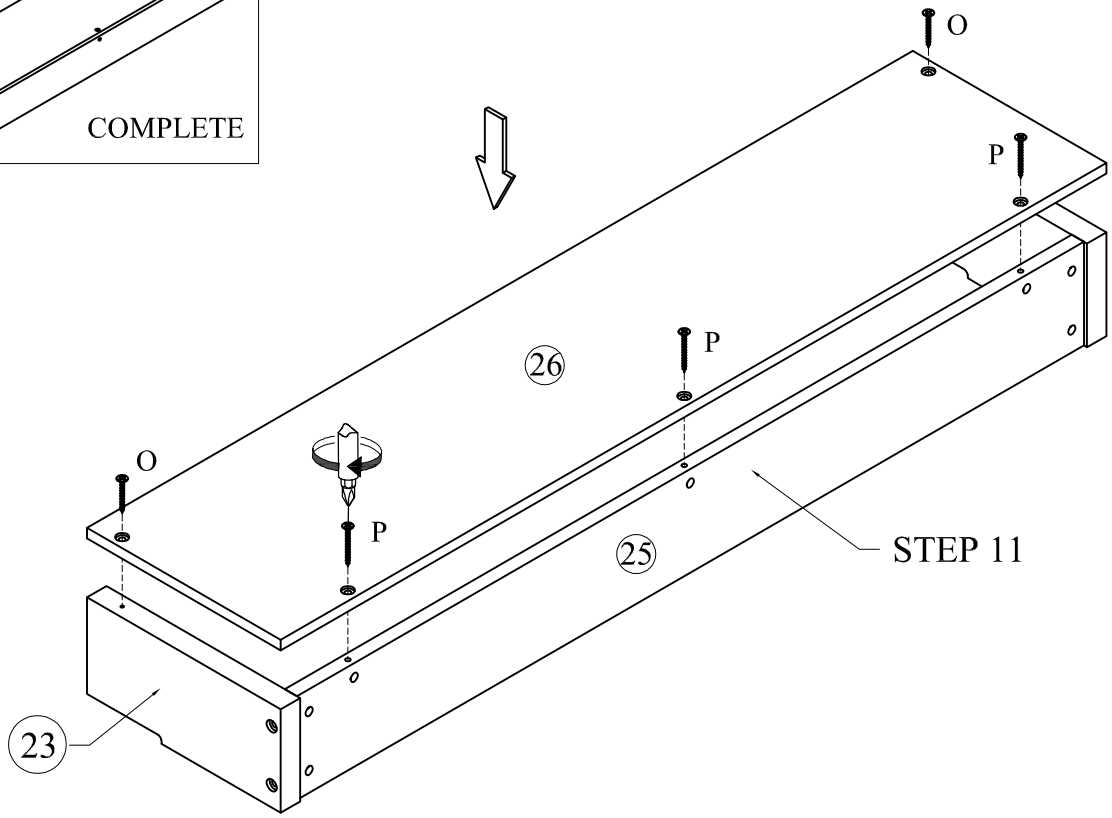

STEP 13

E		02
J		02

STEP 14

P	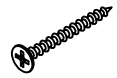	13

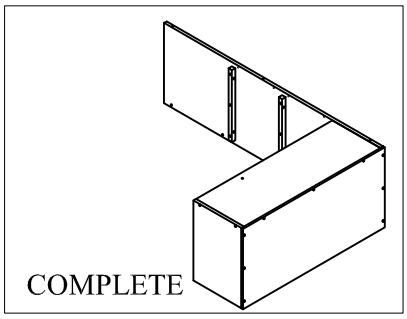

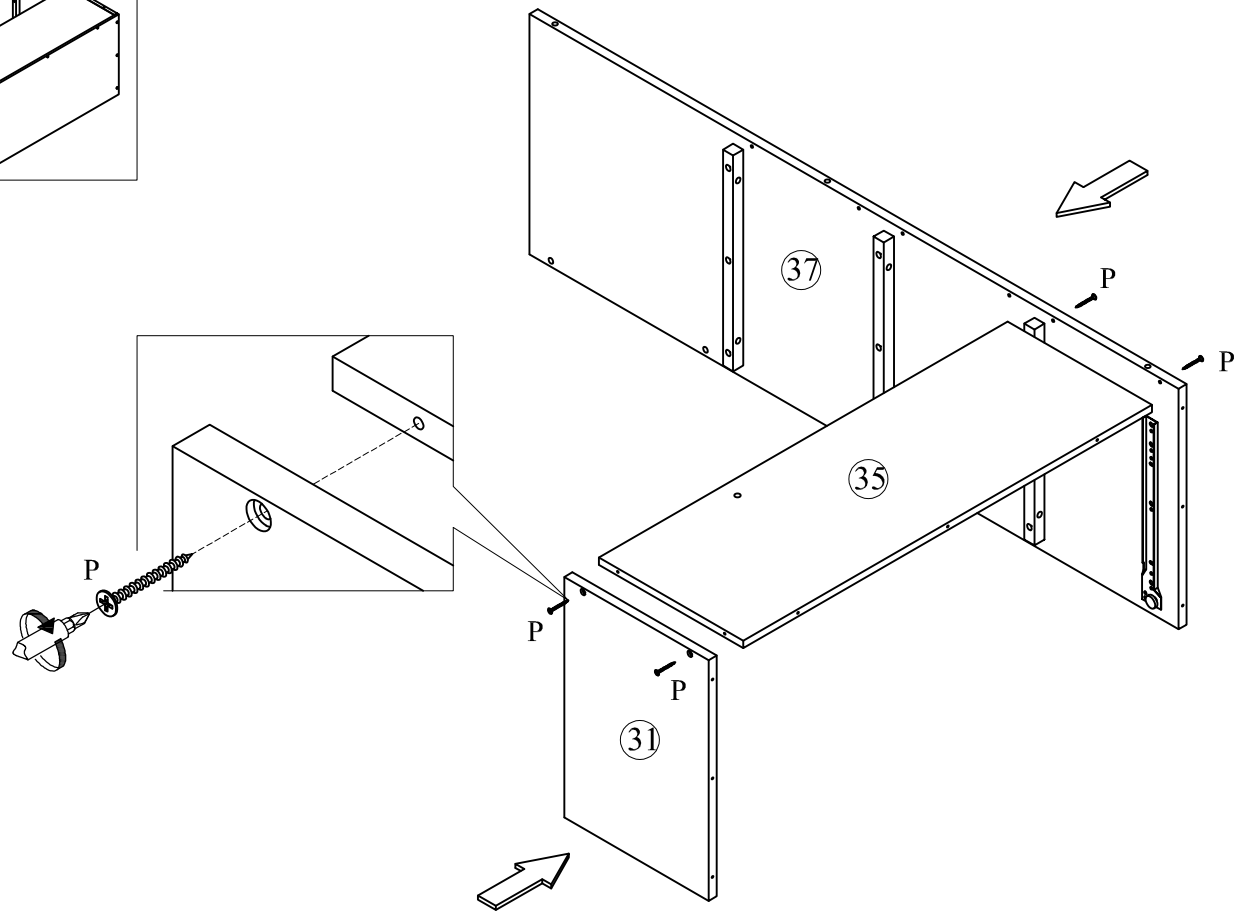

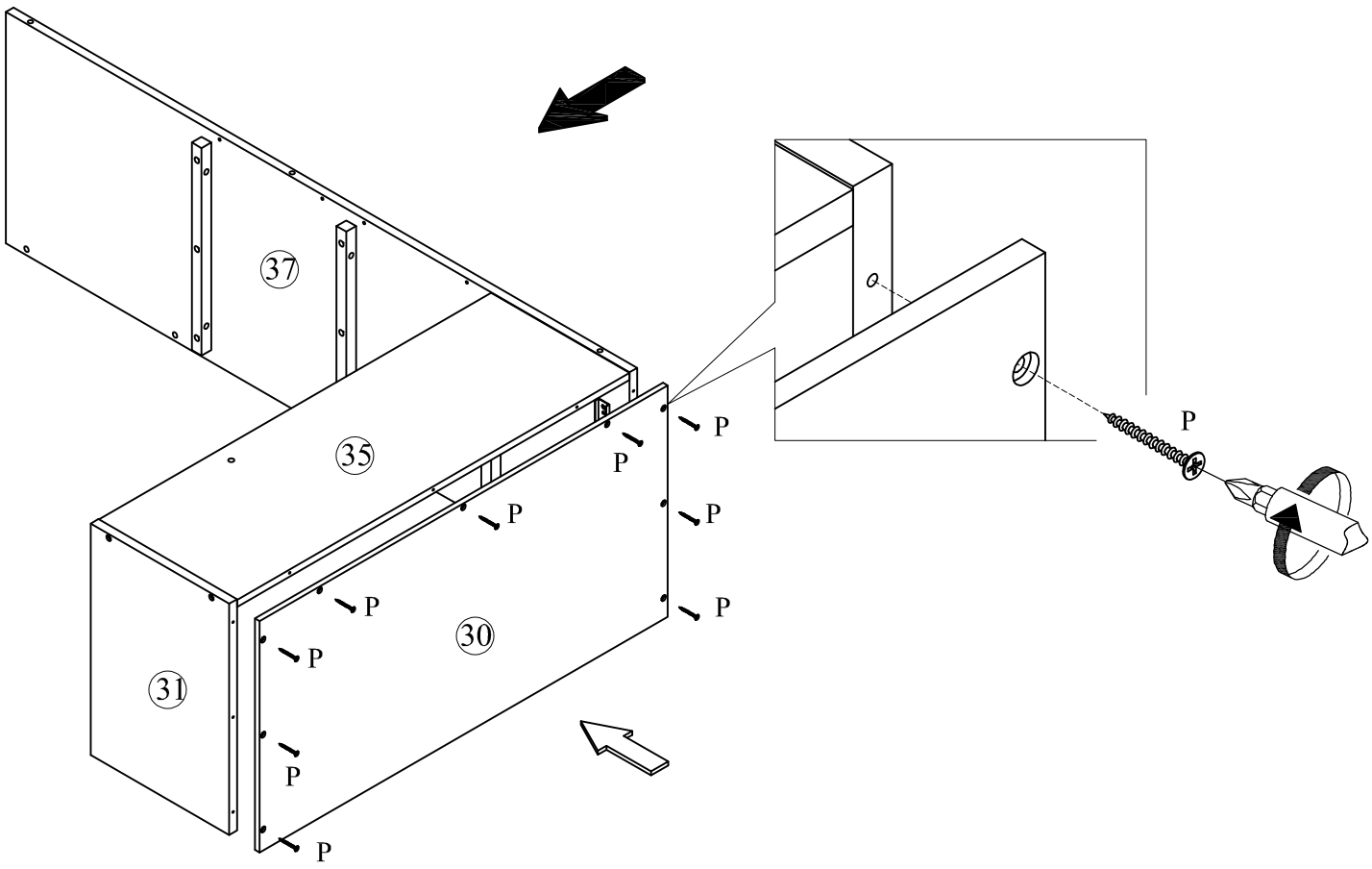

STEP 15

P		08

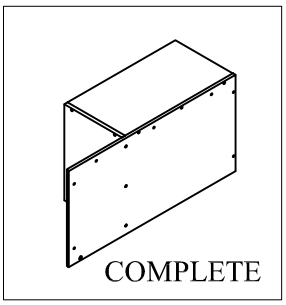

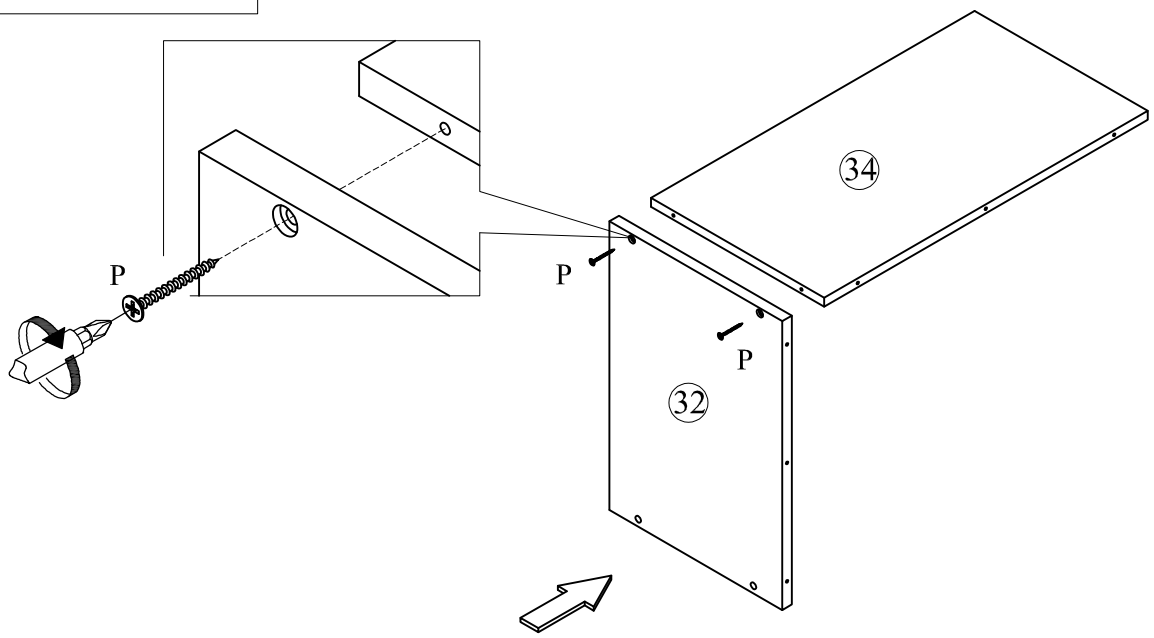

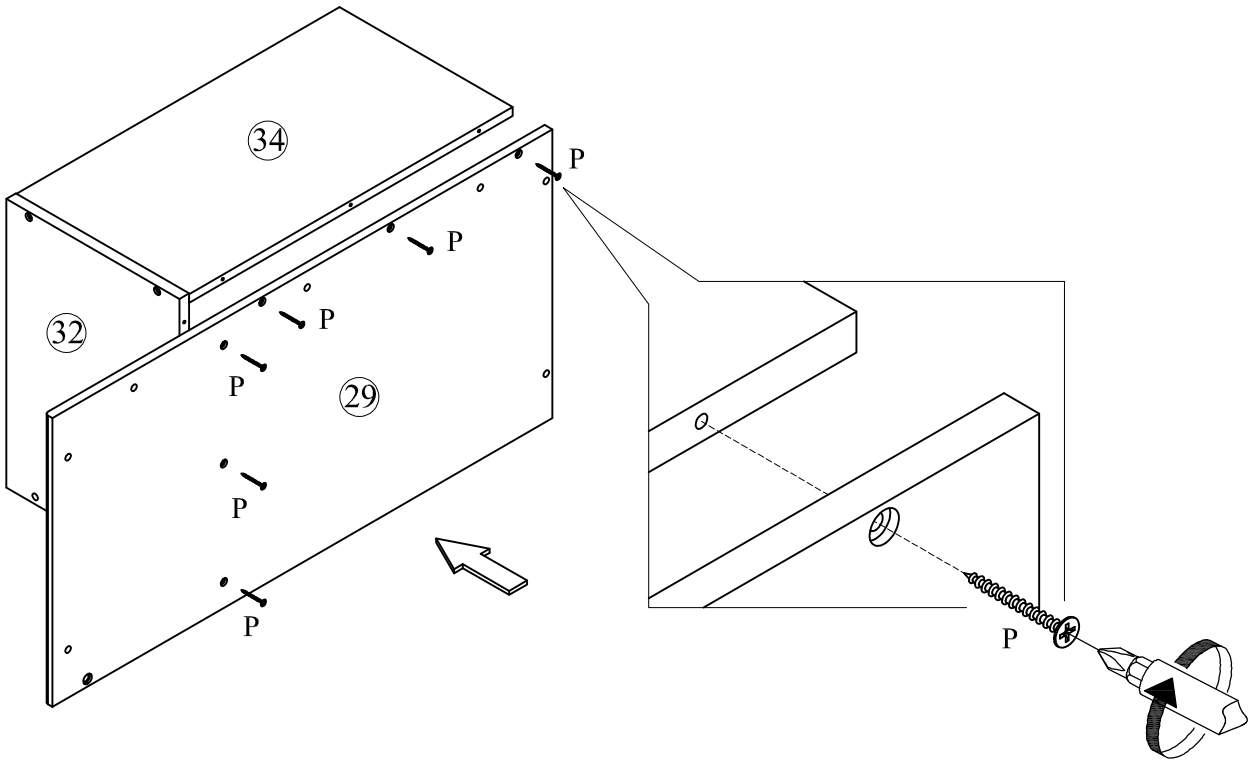

STEP 16

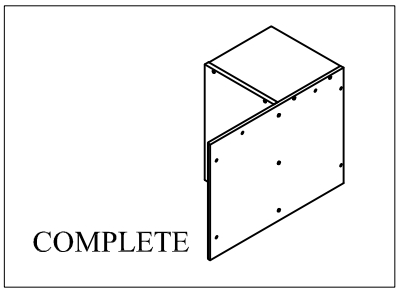

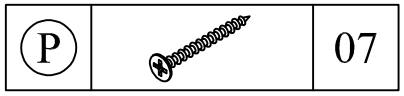

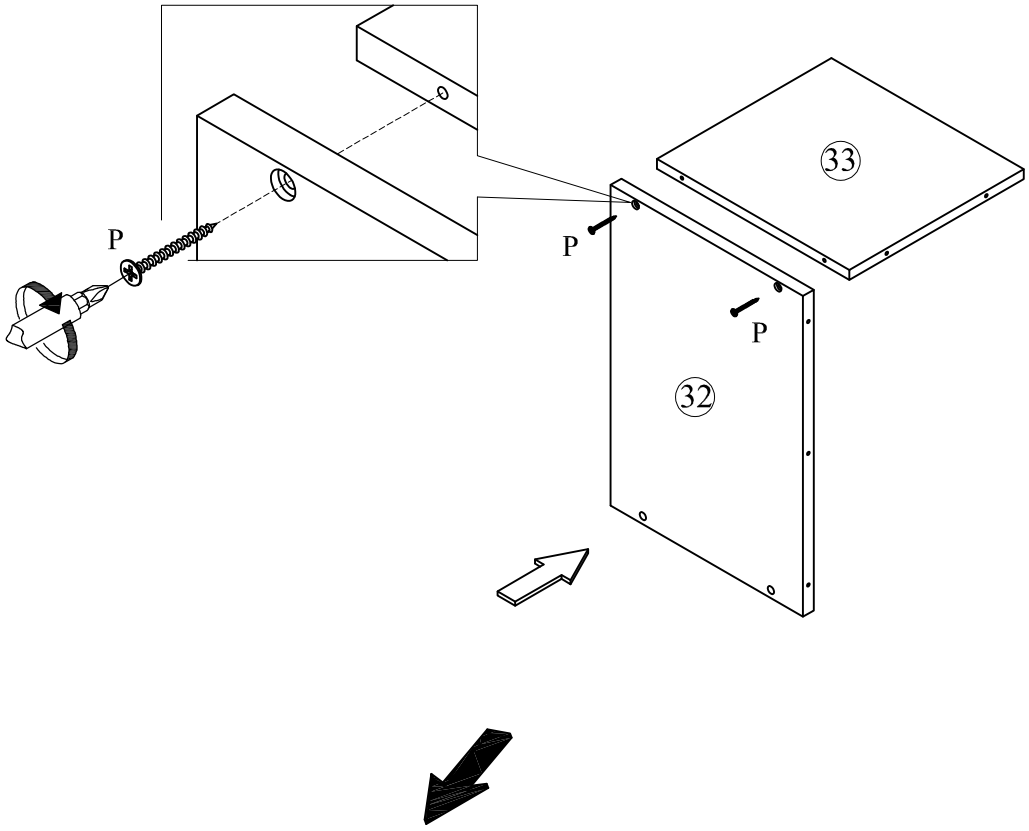

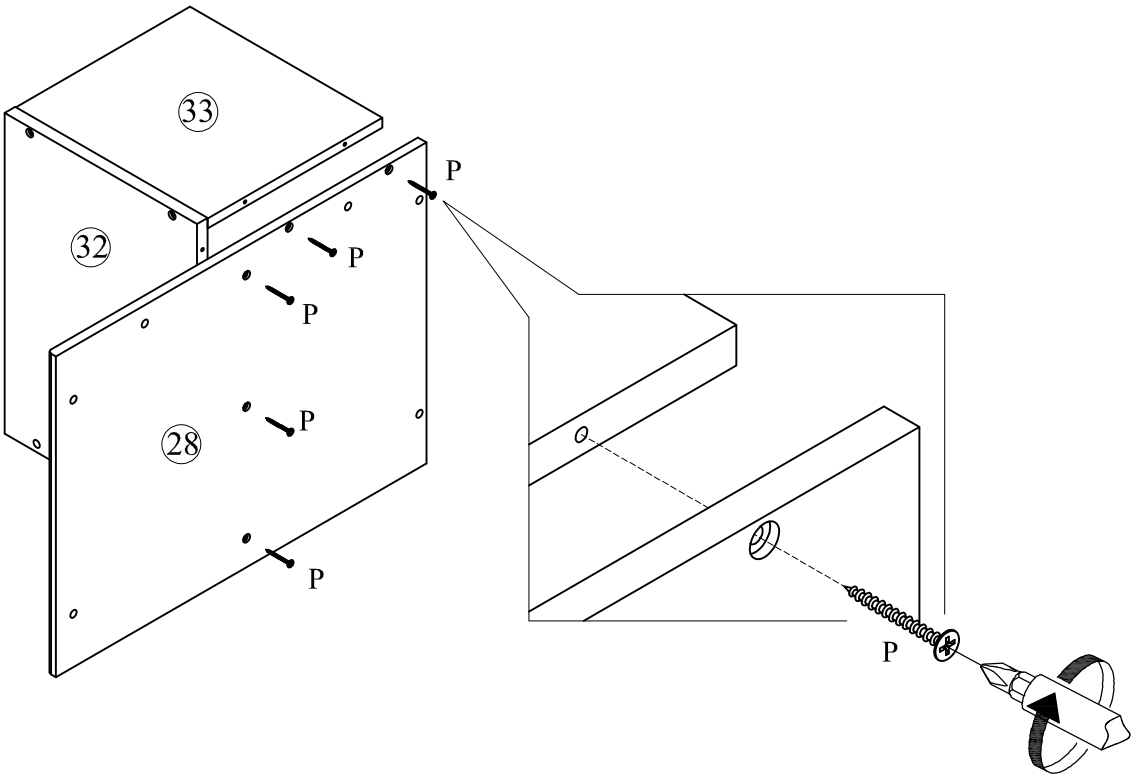

STEP 17

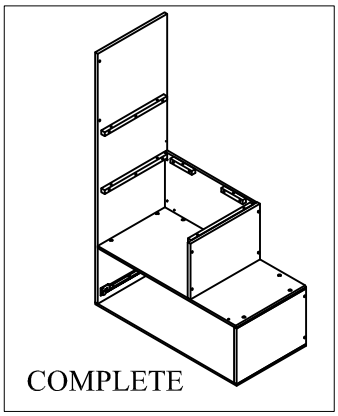

©		07

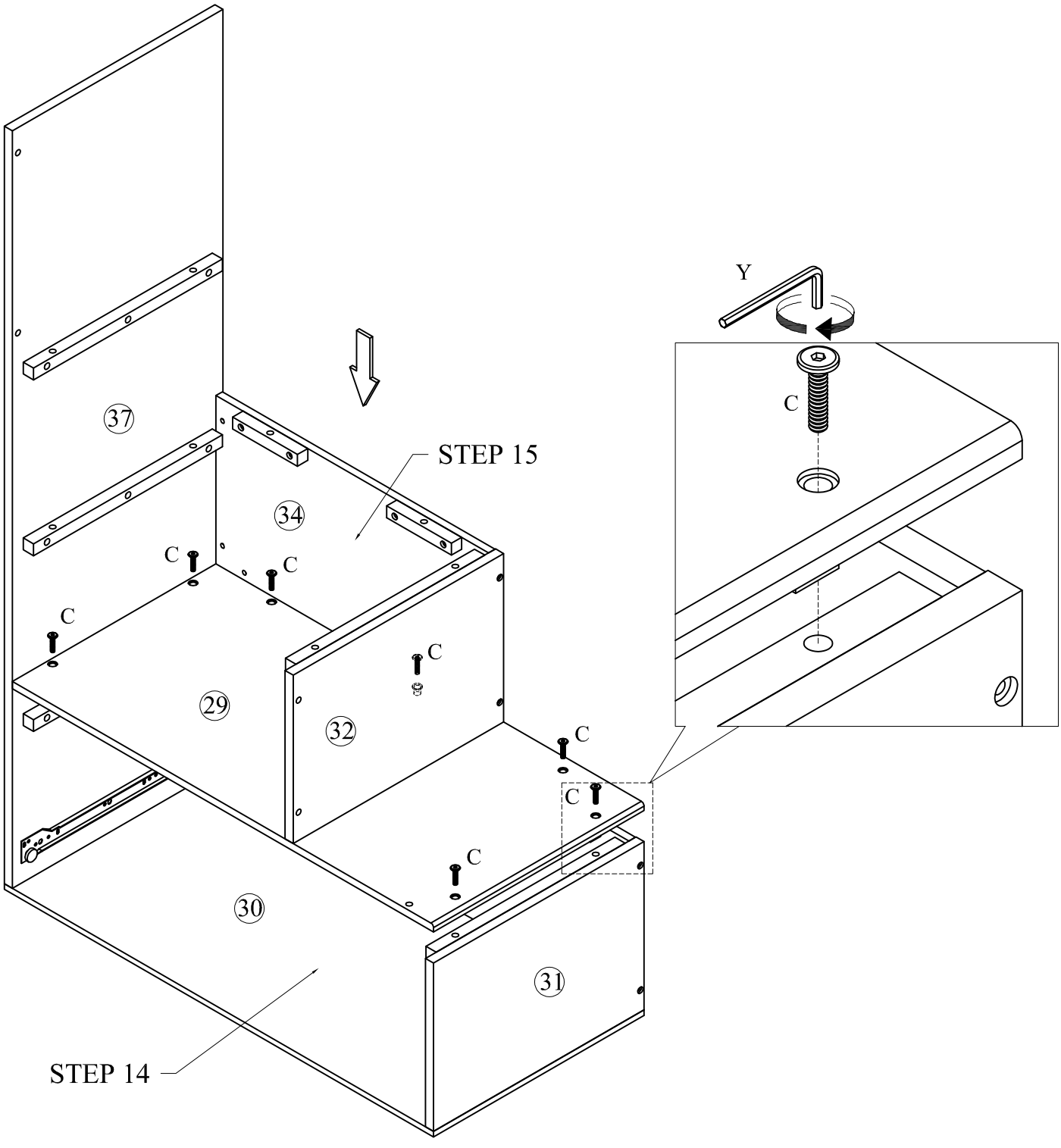

STEP 18

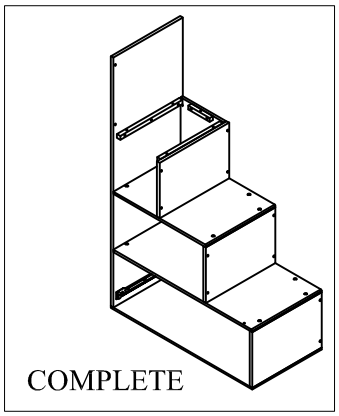

©		06

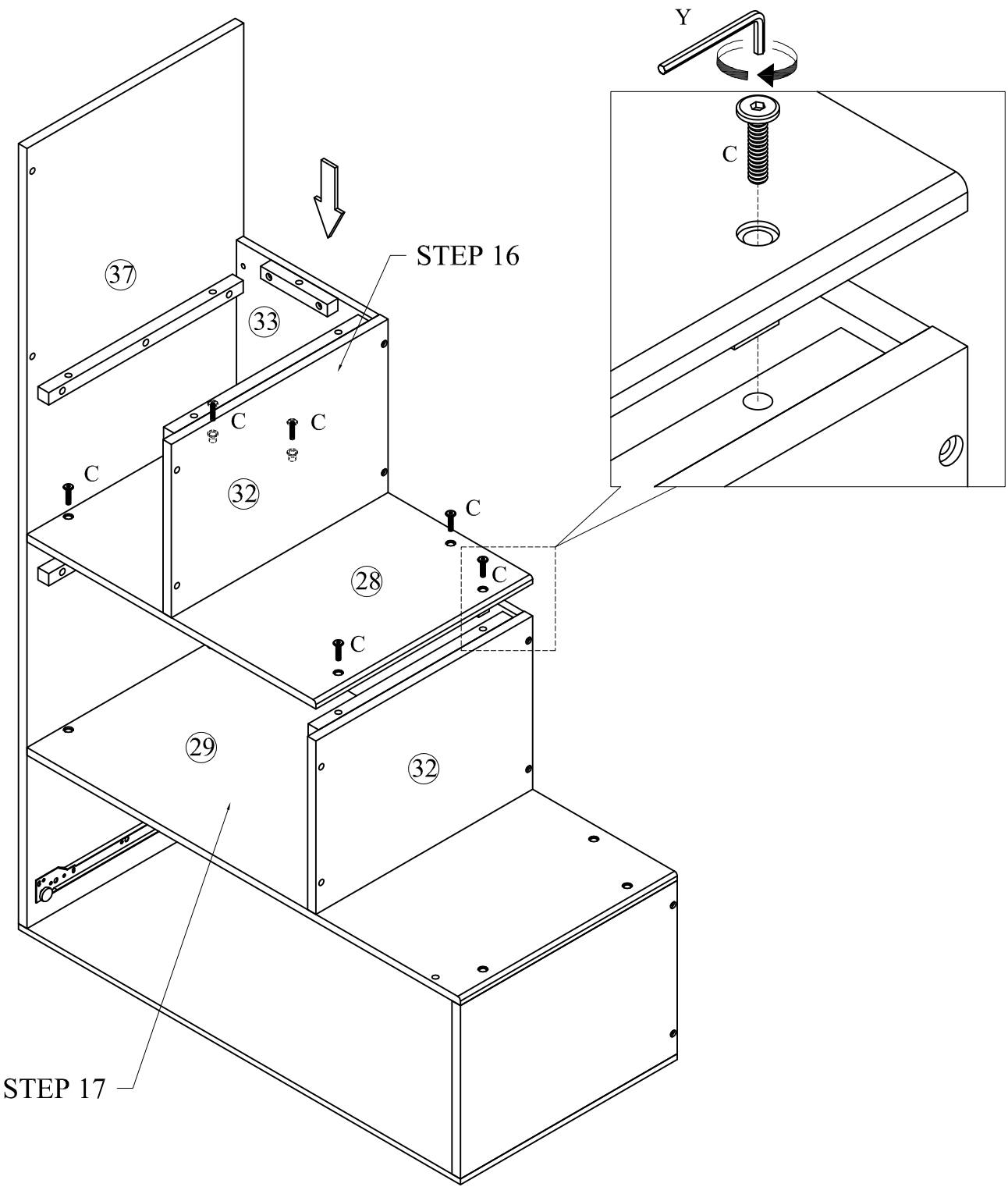

STEP 19

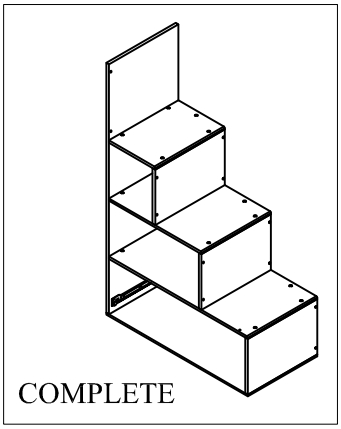

©		05

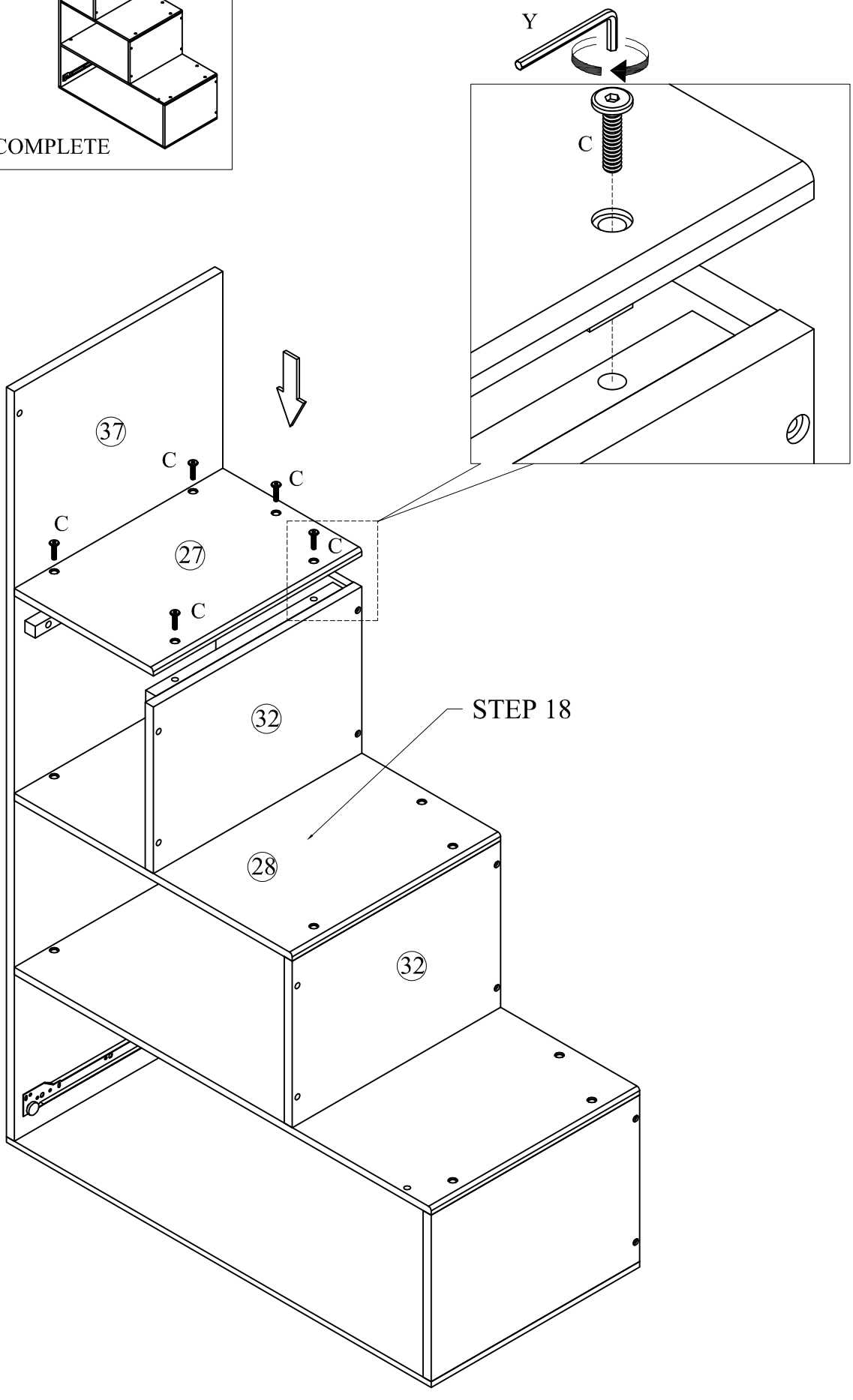

STEP 20

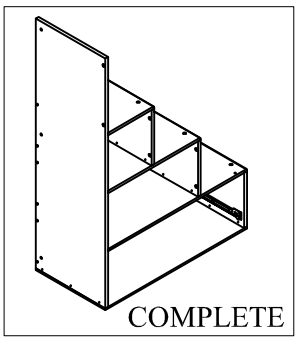

P		06

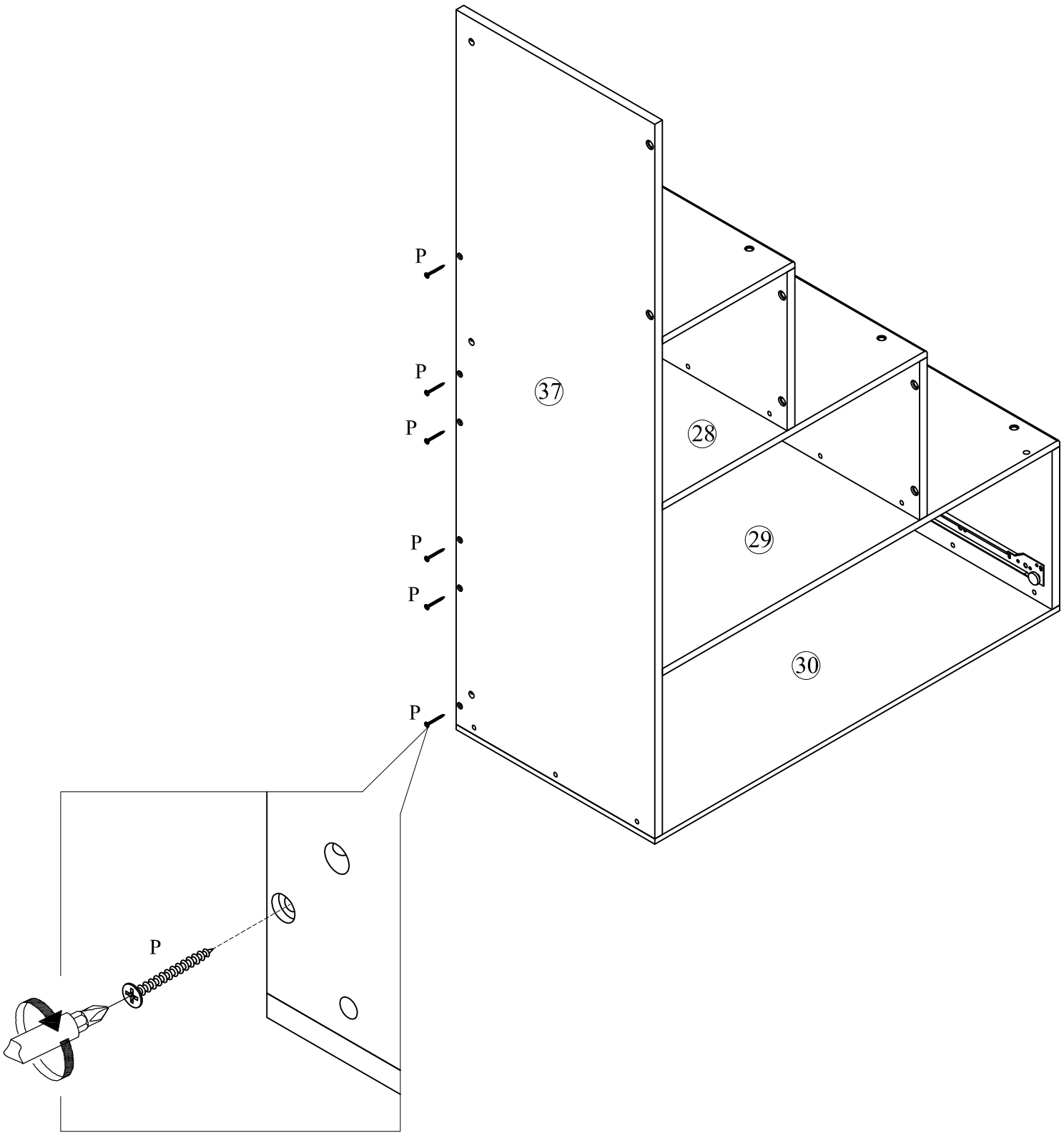

STEP 21

E		07
J		07

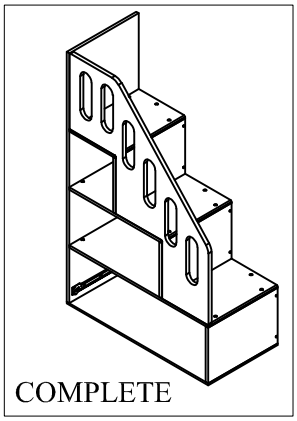

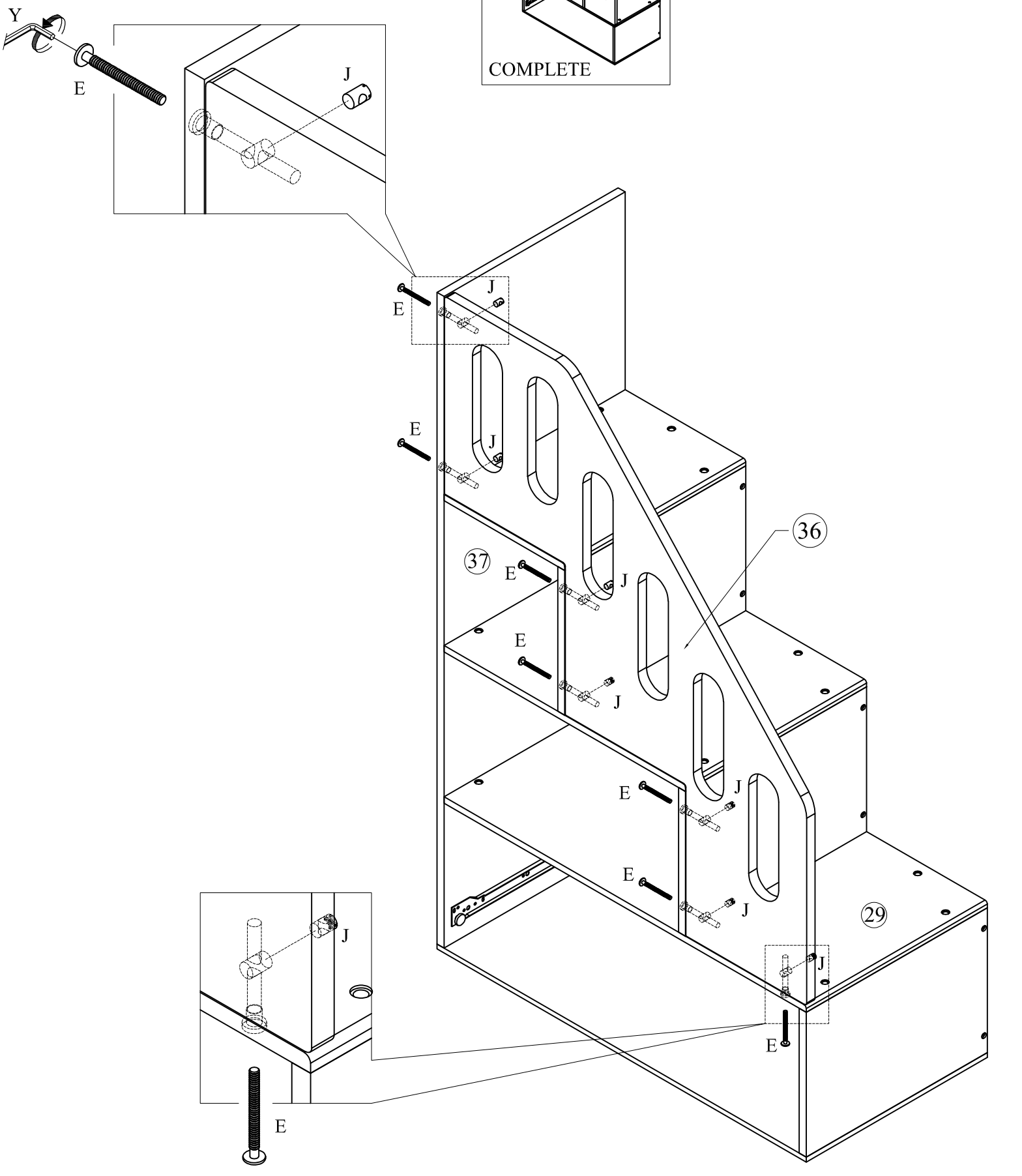

STEP 22

G	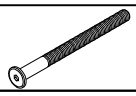	03
J		03

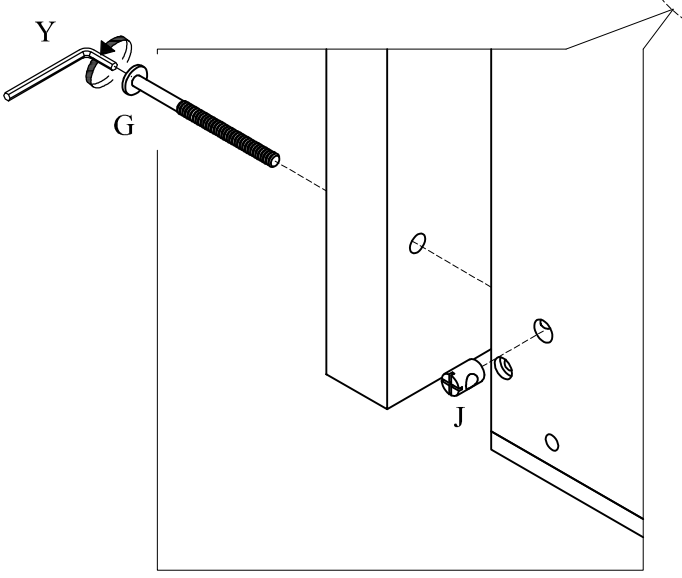

STEP 23

D		01
K		01
W		01

STEP 24

B		02

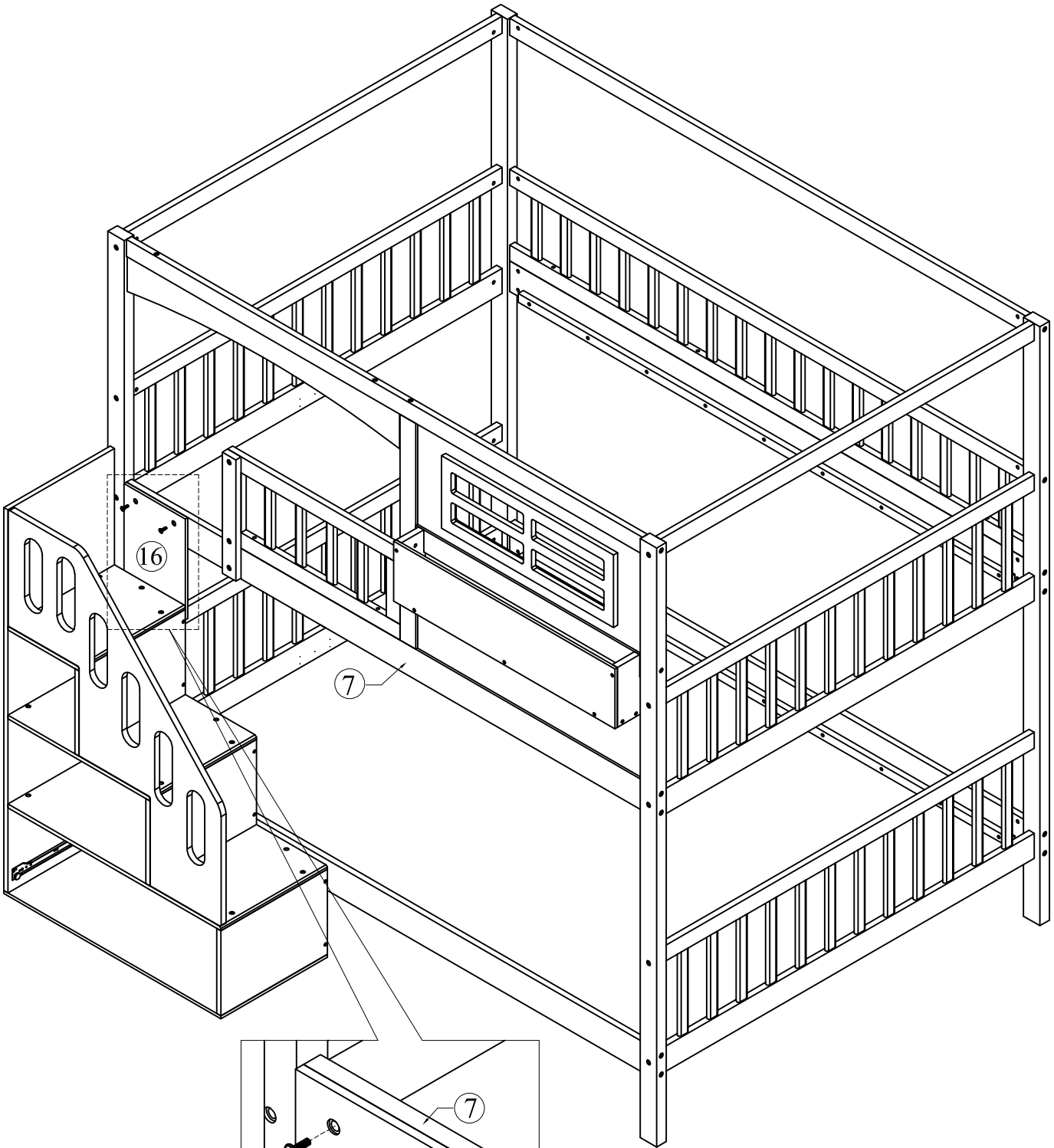

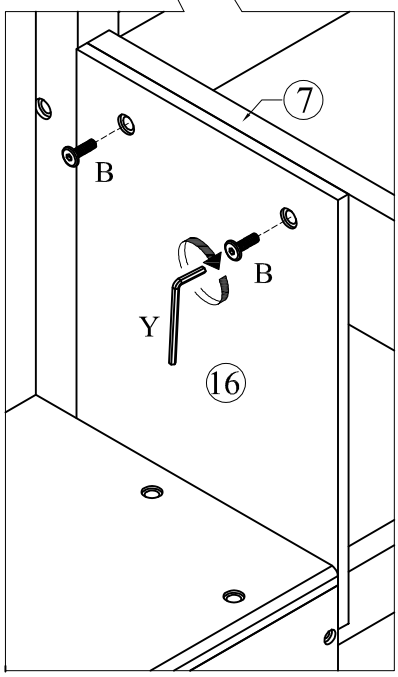

STEP 25

Ⓝ		02

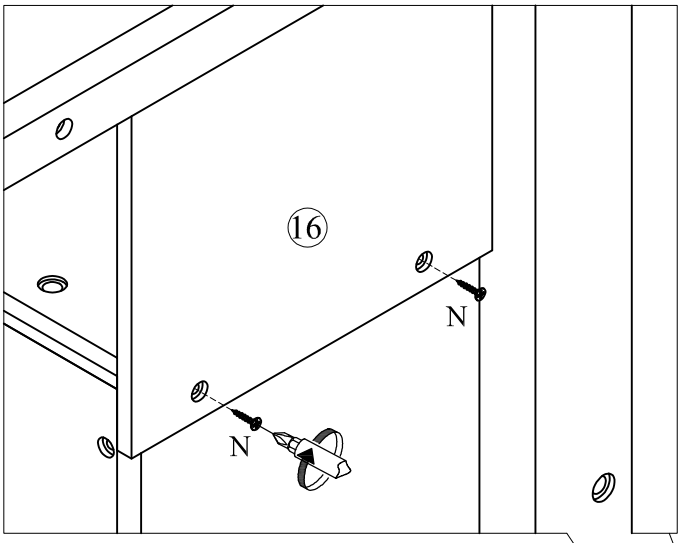

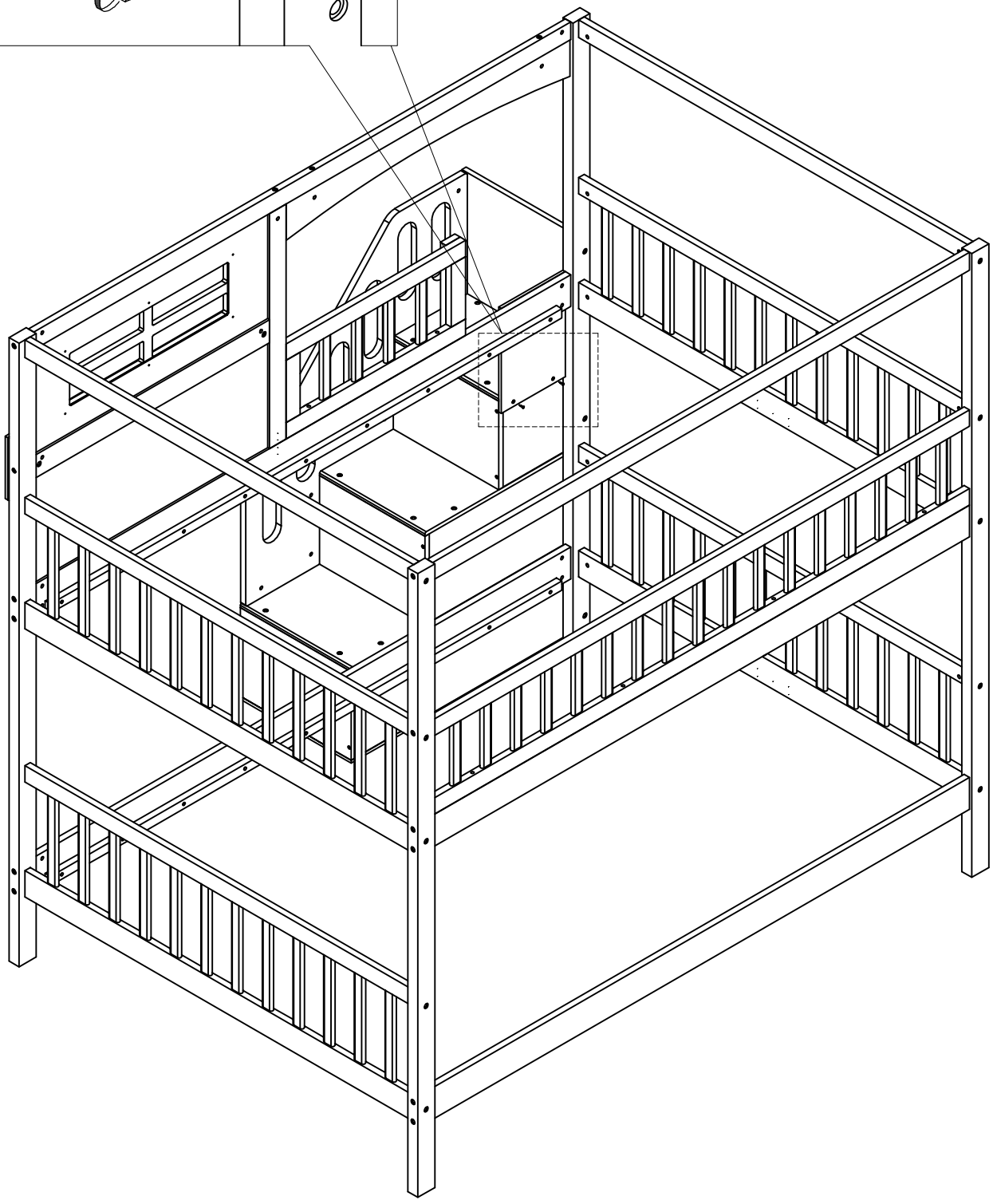

STEP 26

O		17
F		04

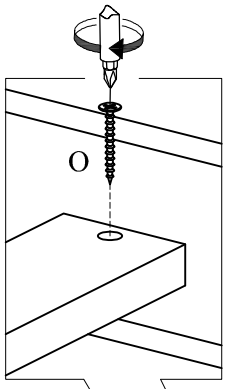

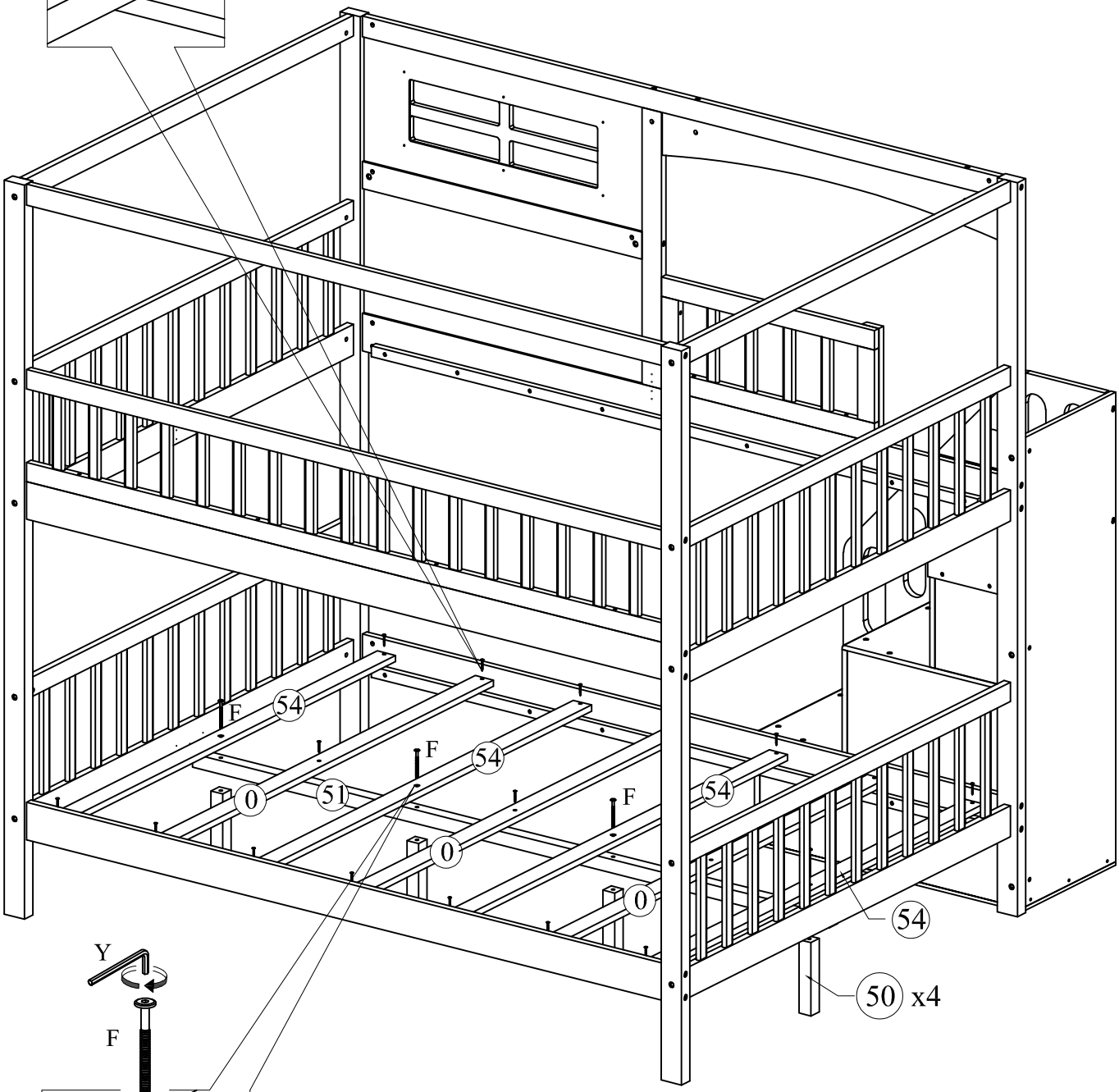

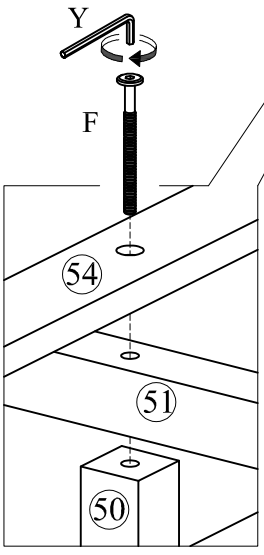

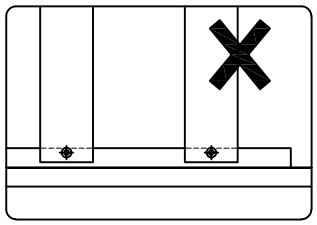

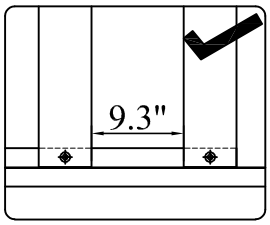

STEP 27

L		08
O		10
R		02

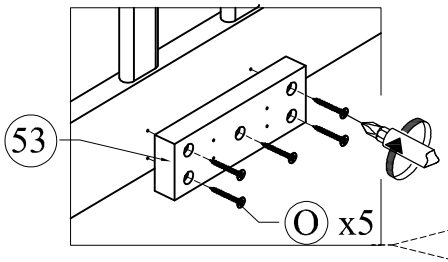

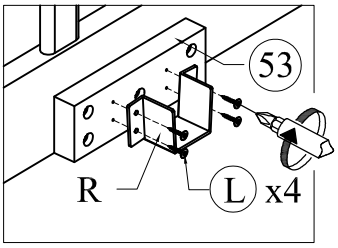

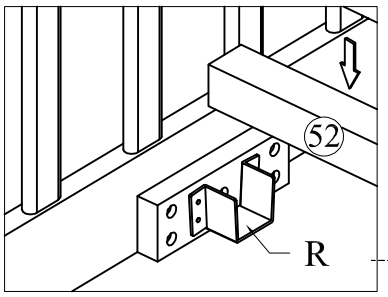

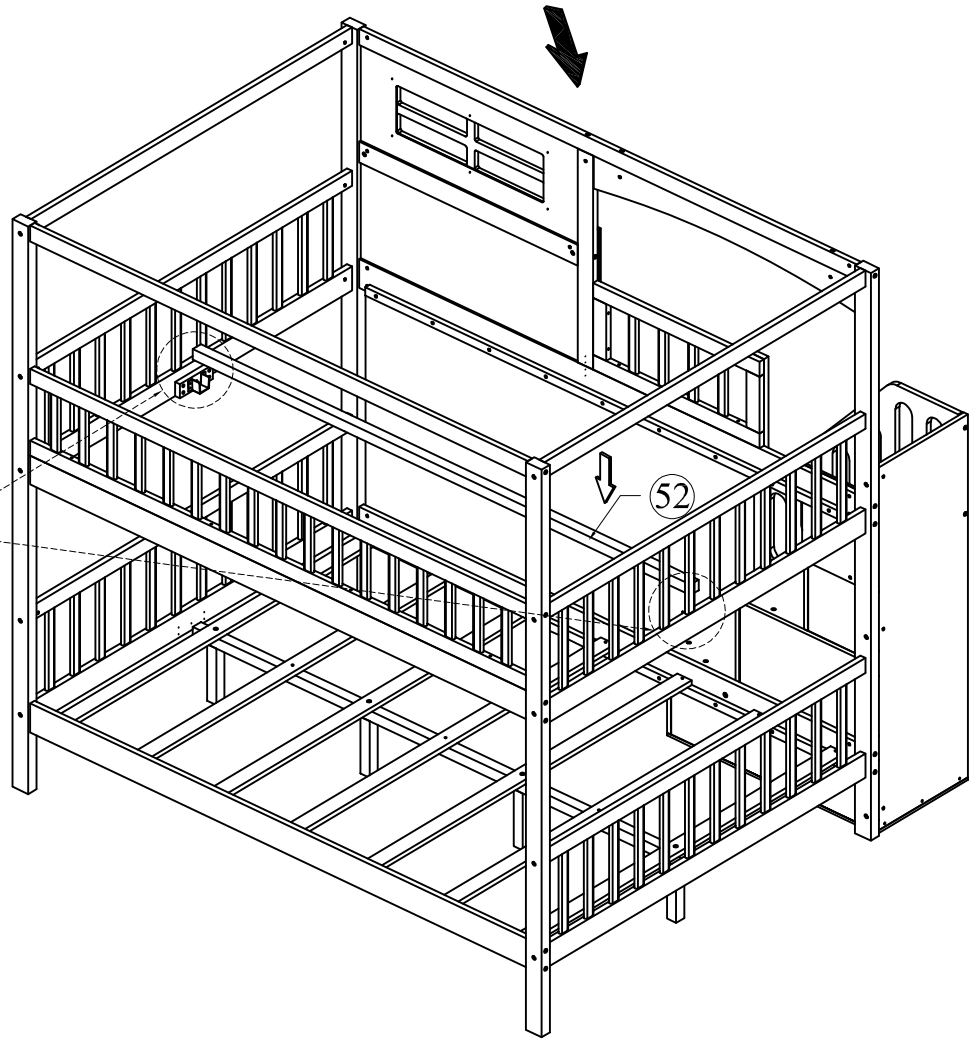

STEP 28

O		42

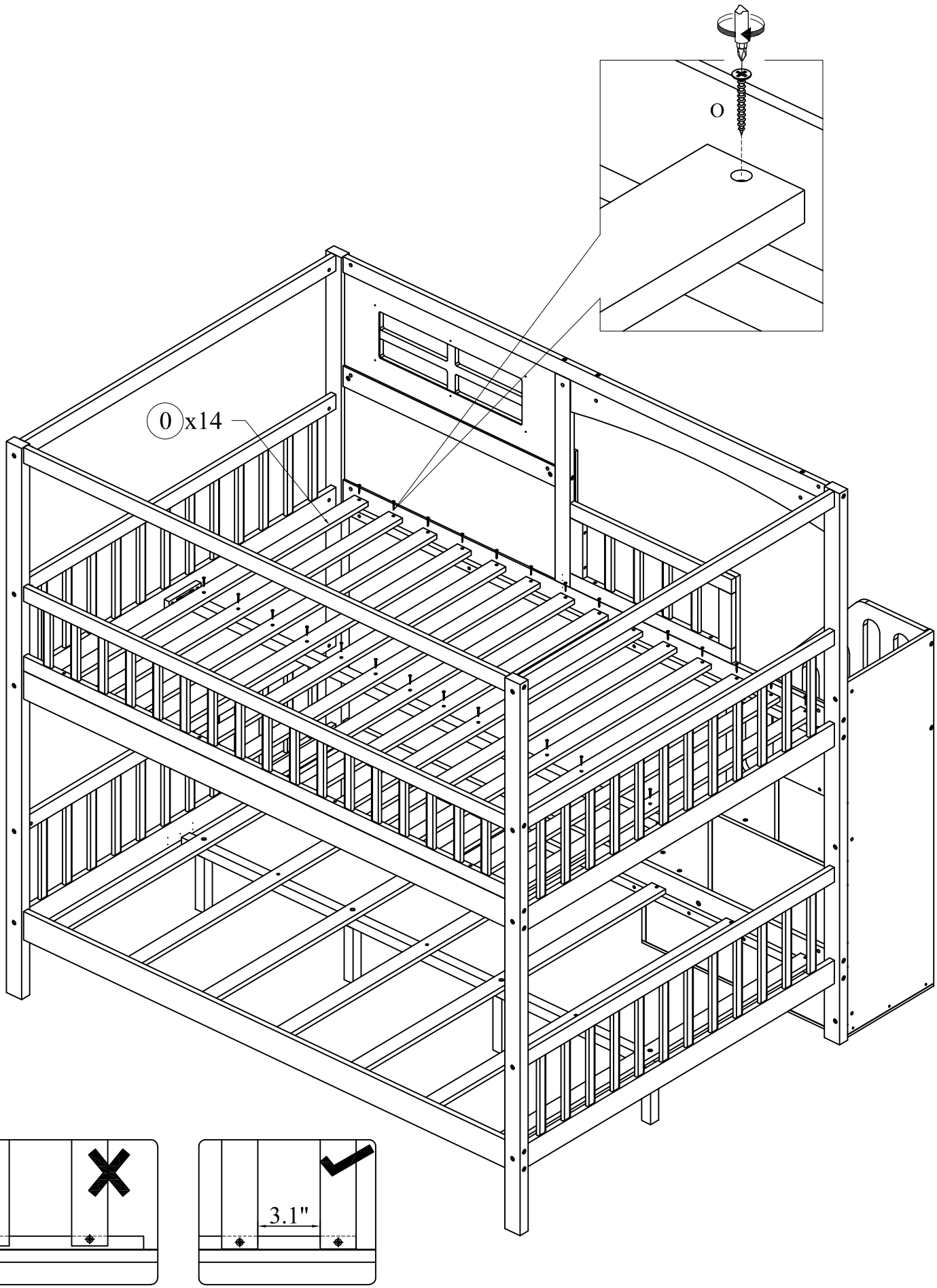

STEP 29

S		04

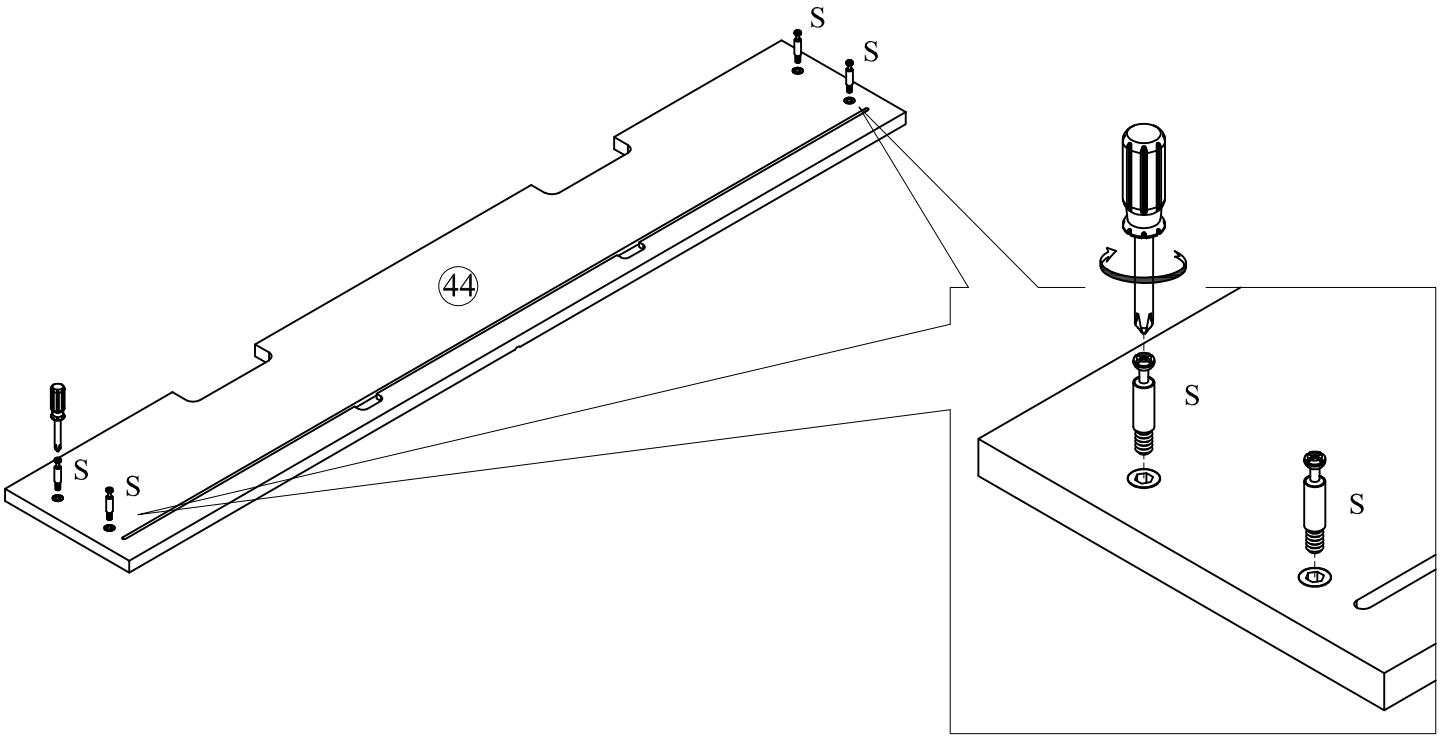

STEP 30

S		04

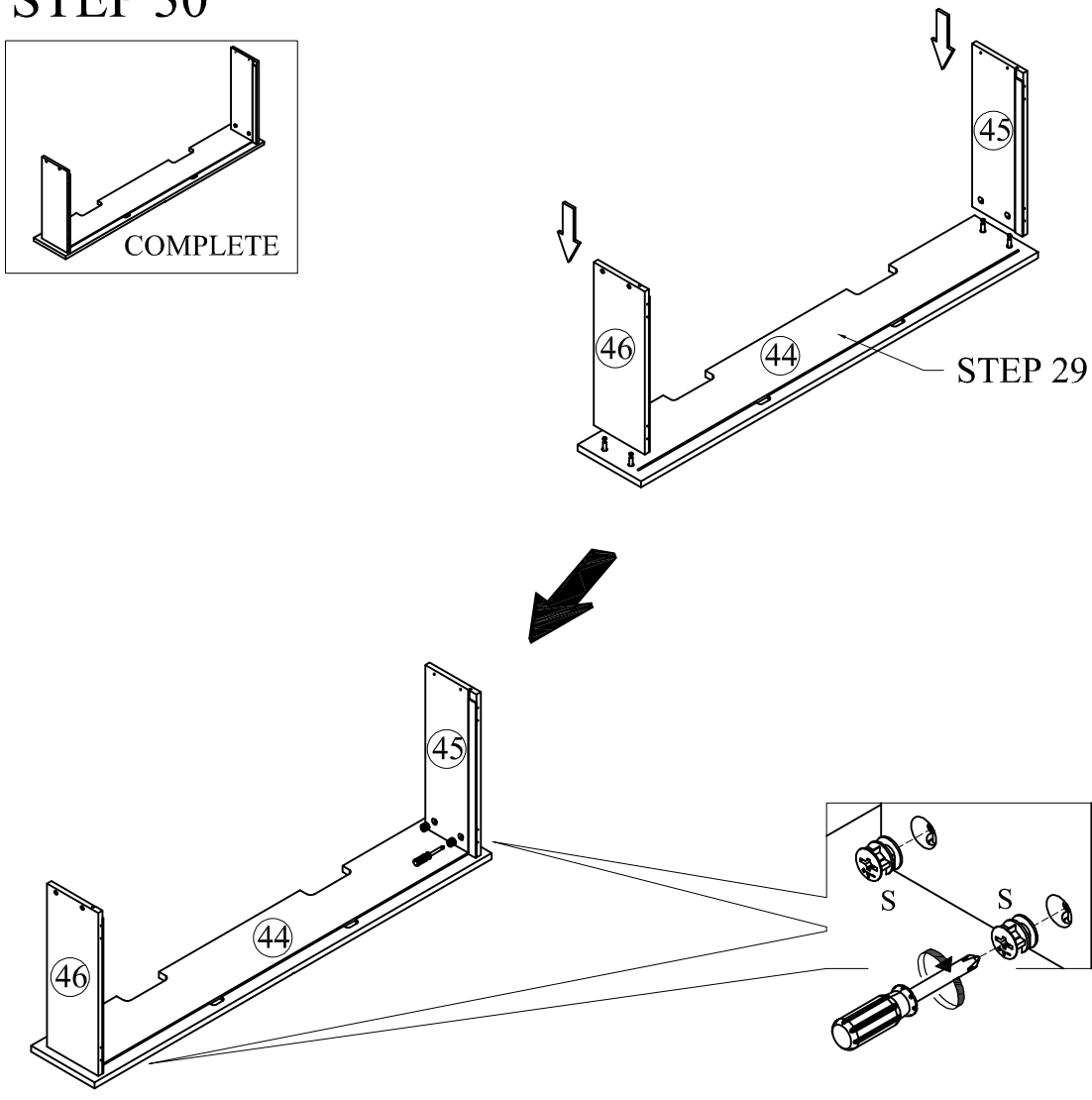

STEP 31

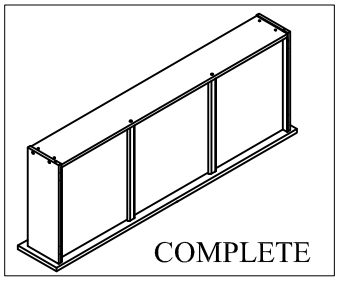
COMPLETE

P		06

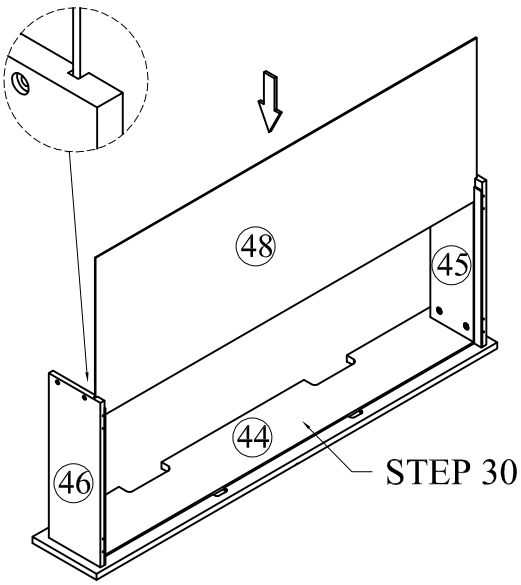
48
45
44
46
STEP 30

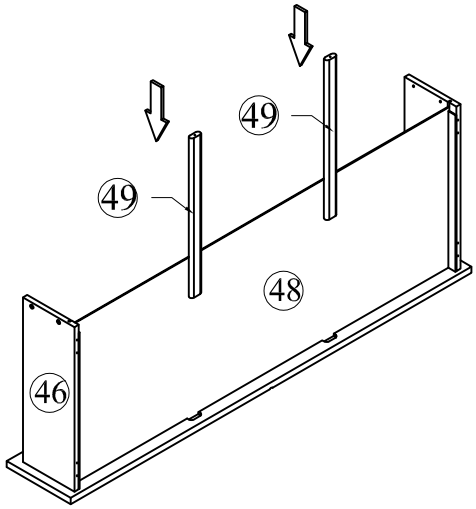
49
49
48
46

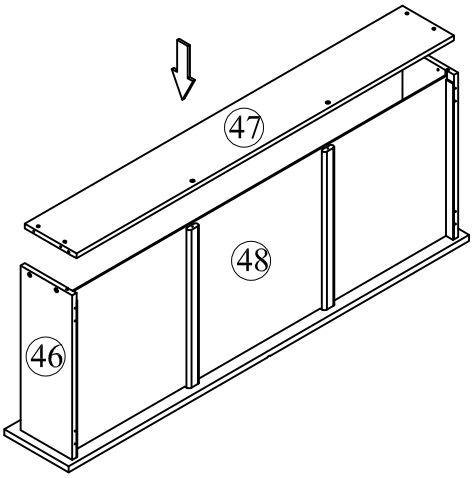
47
48
46

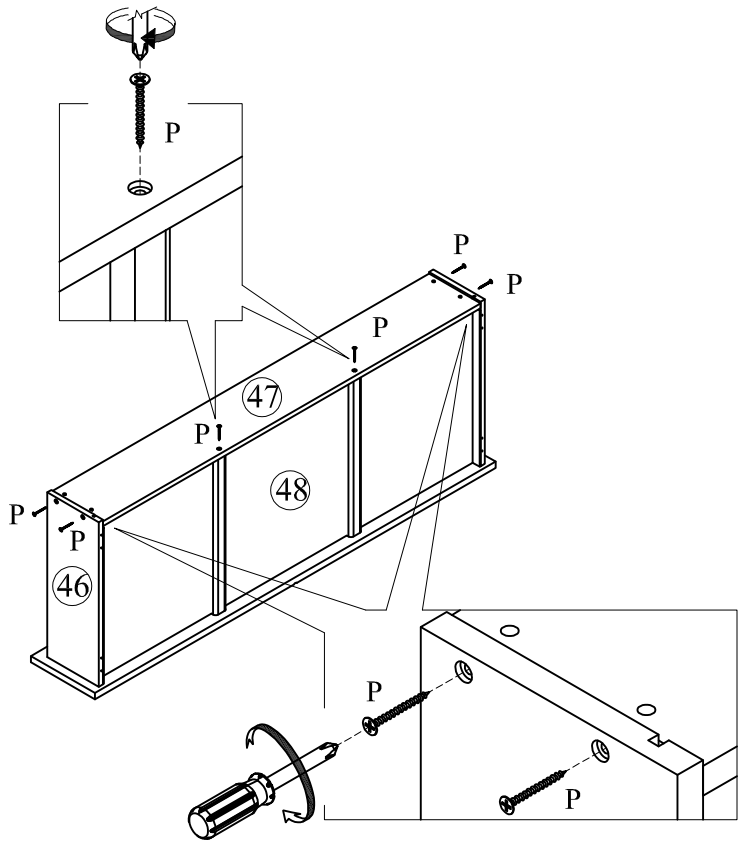
P
P
P
P
47
P
48
P
P
46
P
P

STEP 32

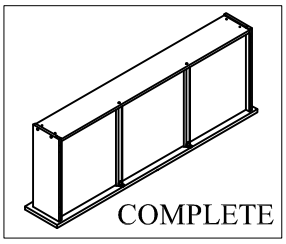

M		04
T		02

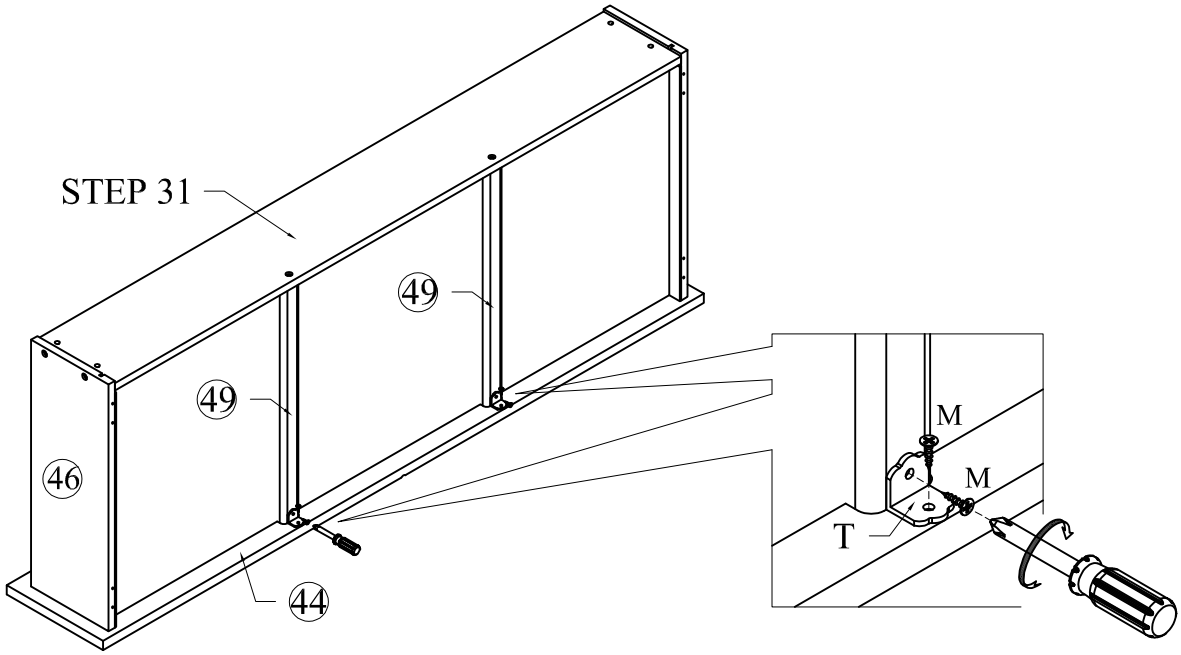

STEP 33

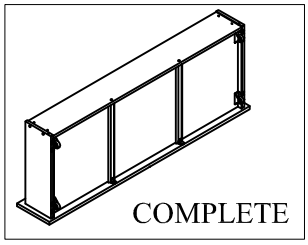

M		16
U		04

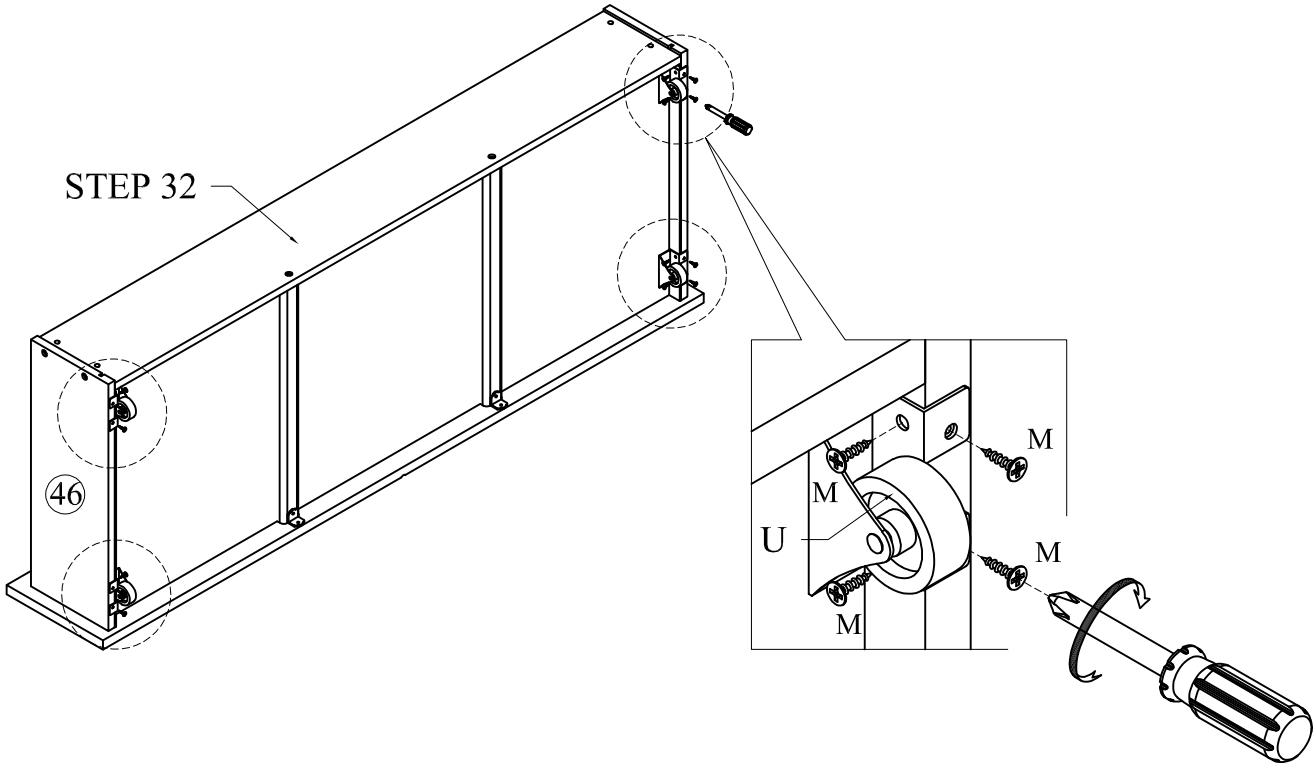

STEP 34

S		04

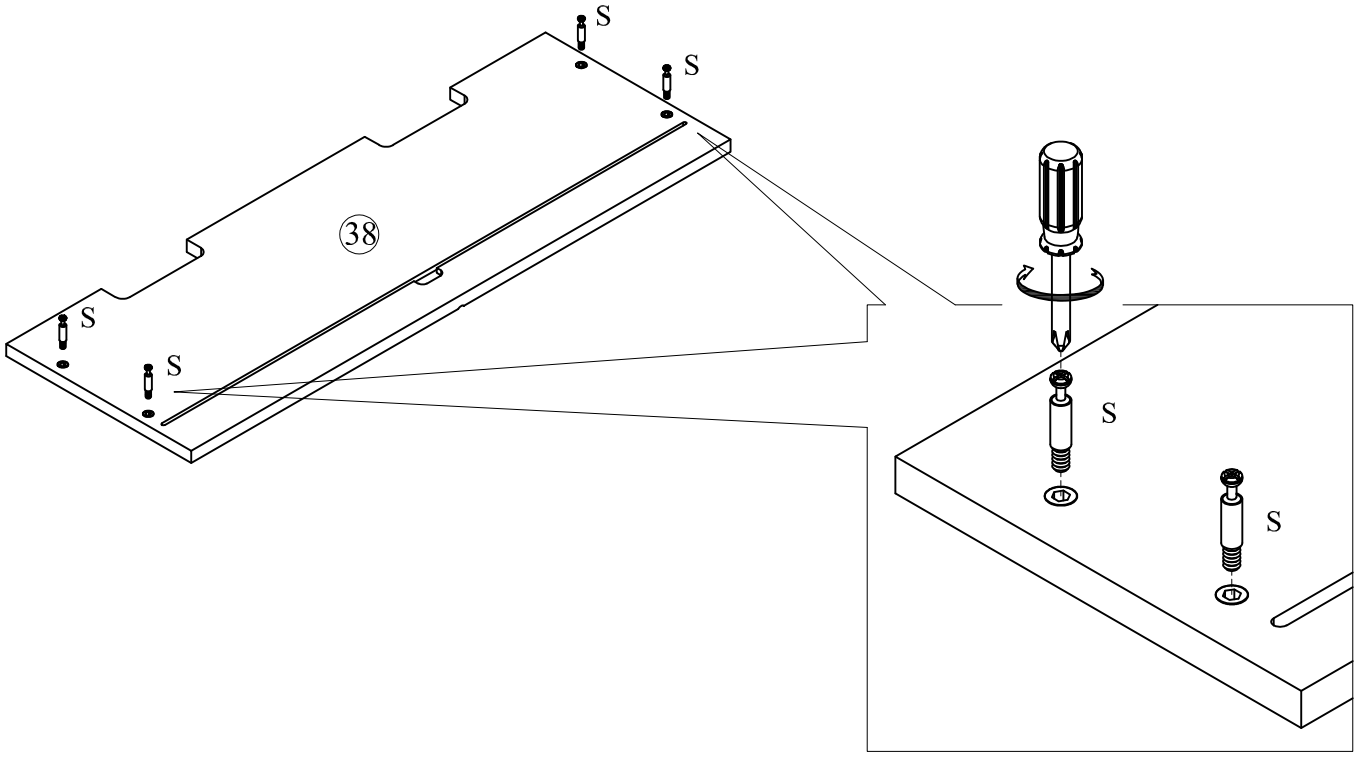

STEP 35

S		04

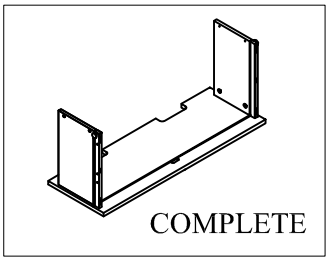

STEP 36

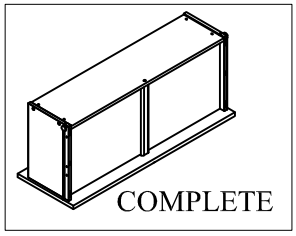

P		05

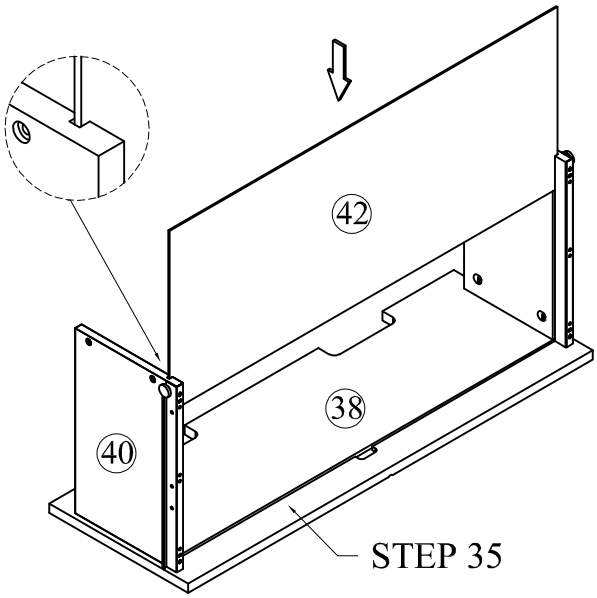

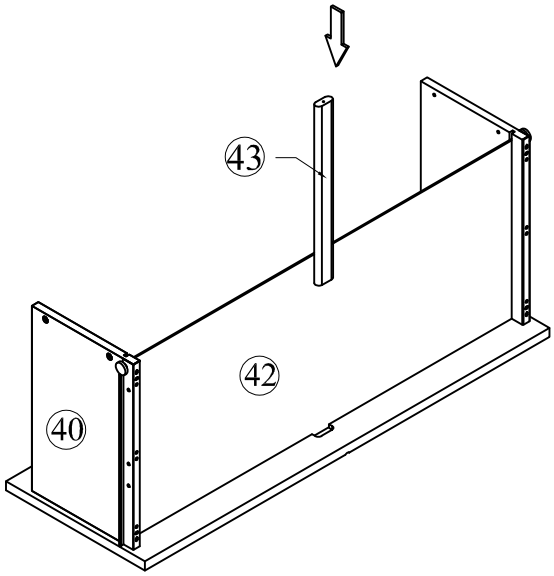

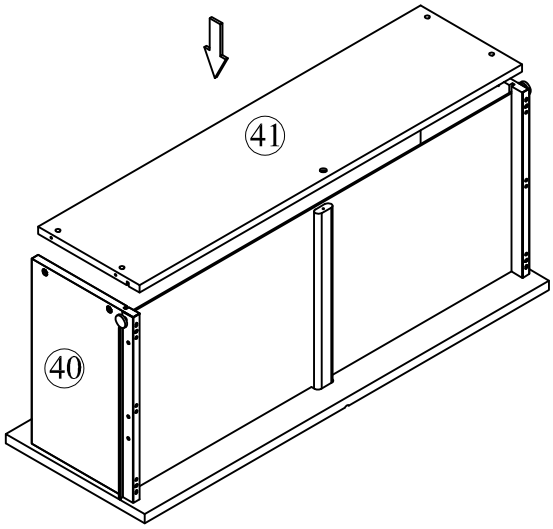

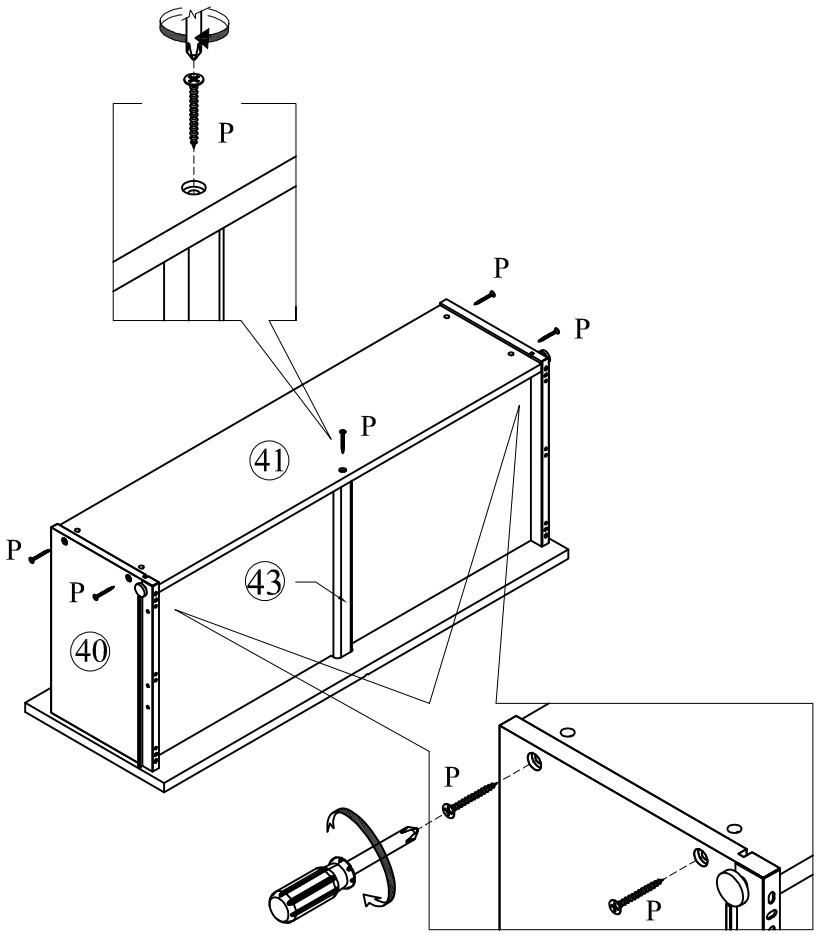

STEP 37

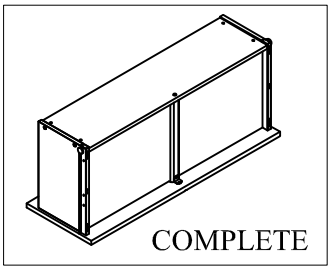

M		02
T		01

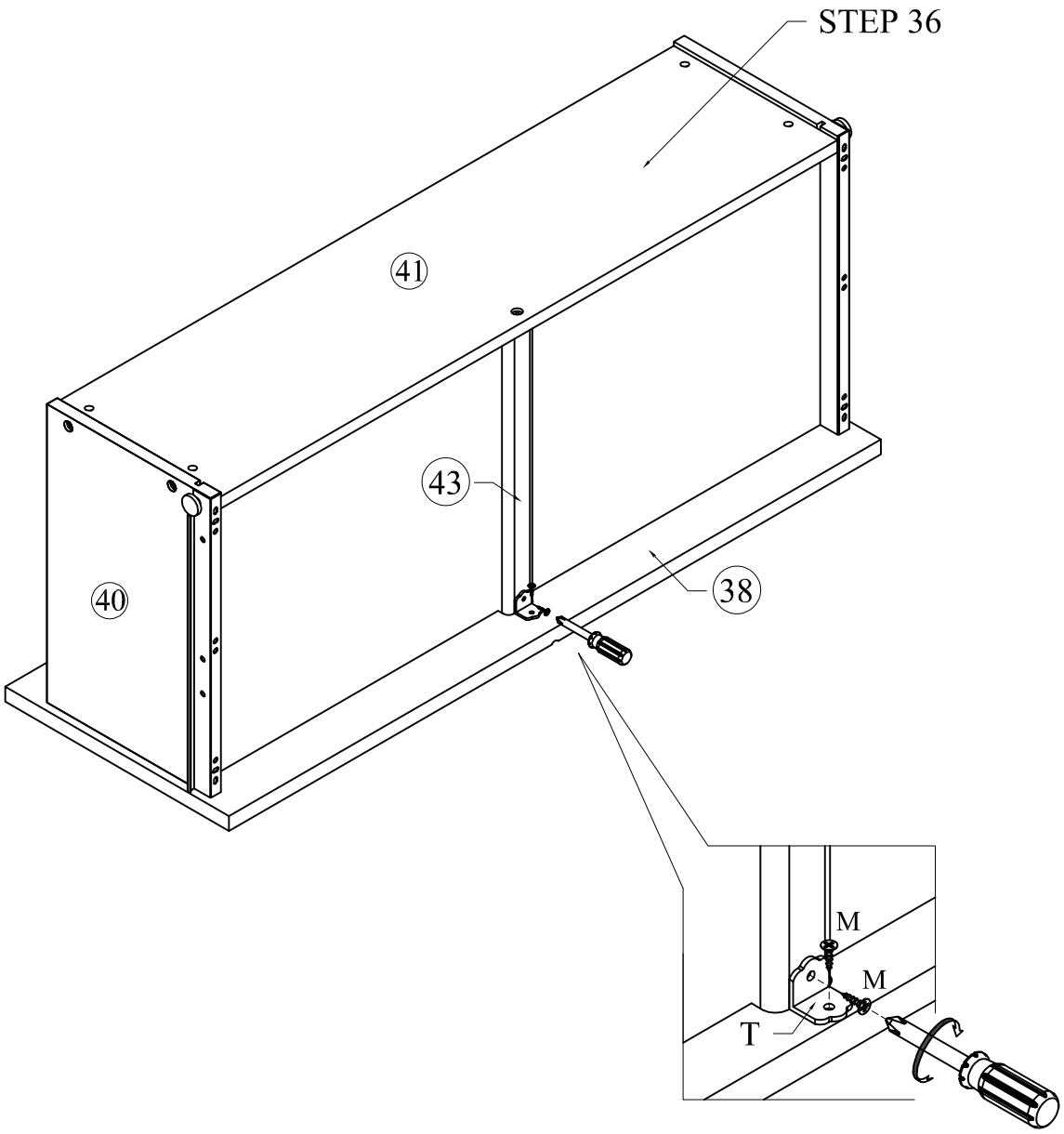

STEP 38

O		04
X		02

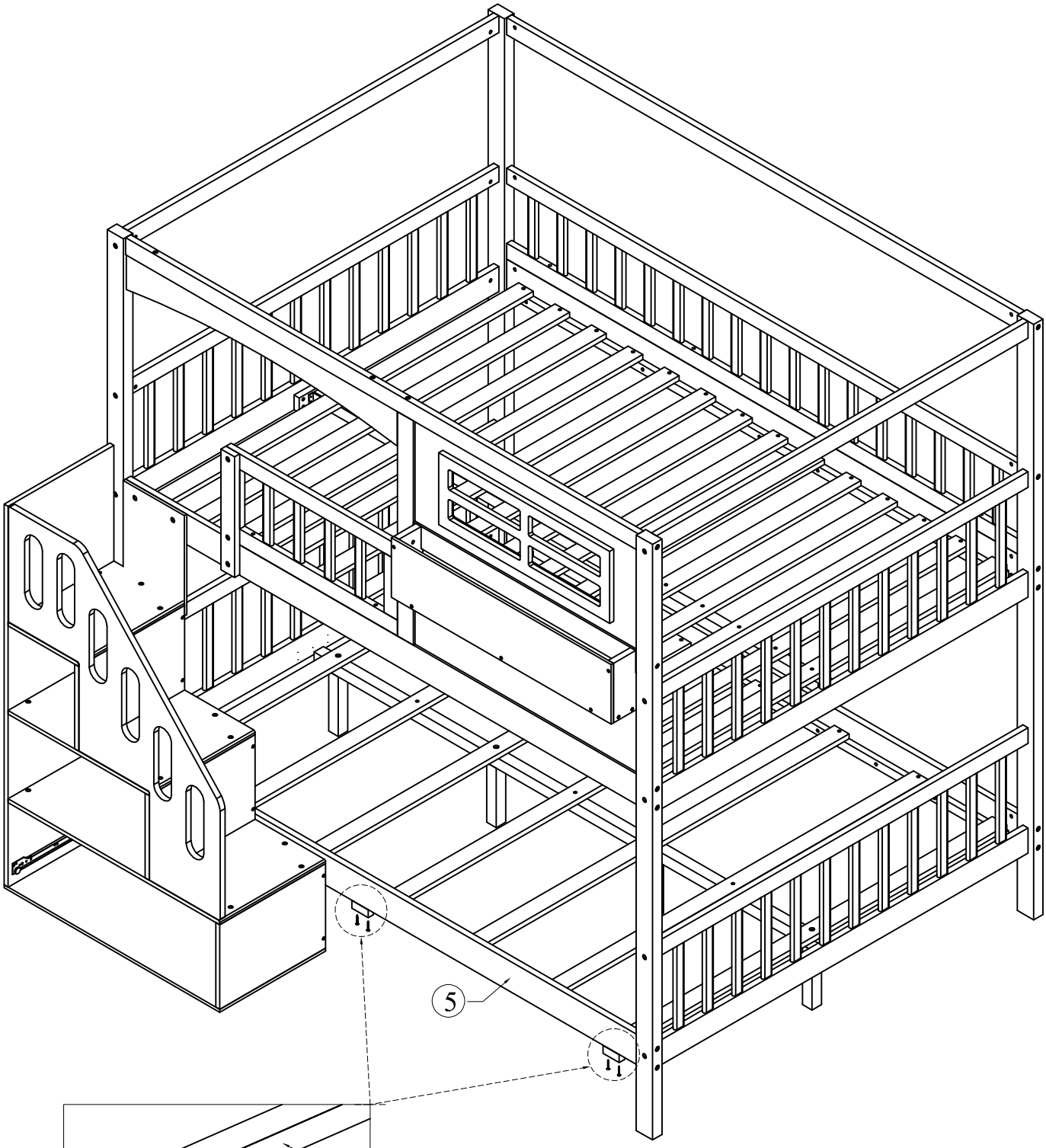

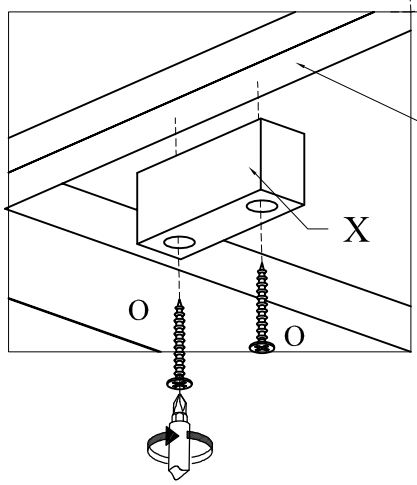

The wooden stops are securely attached underneath the slat support (part 5)..

STEP 39

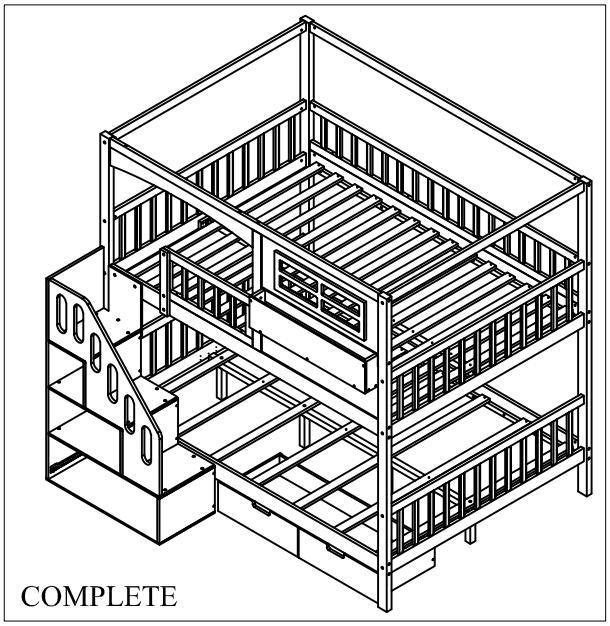

COMPLETE

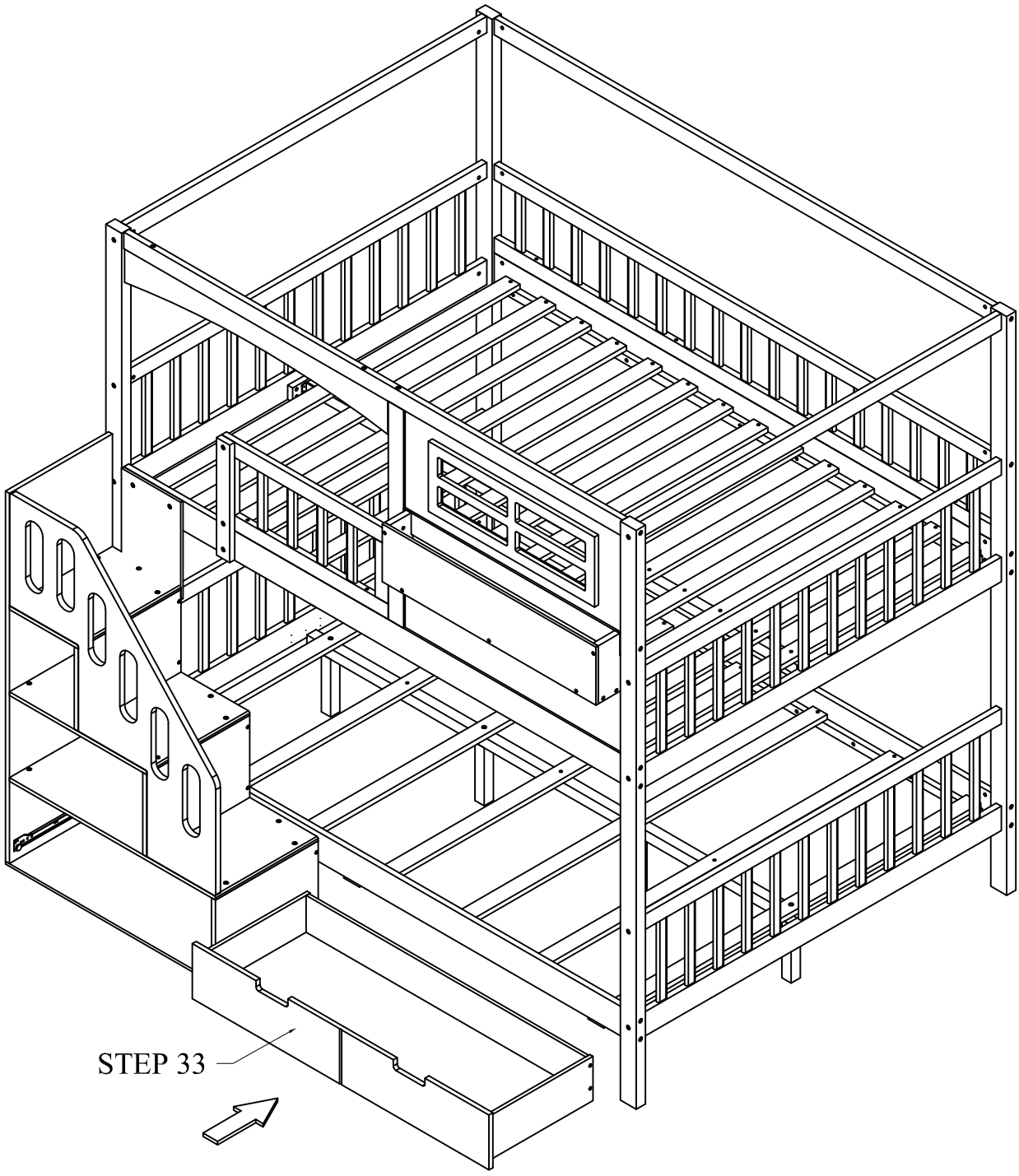

STEP 40

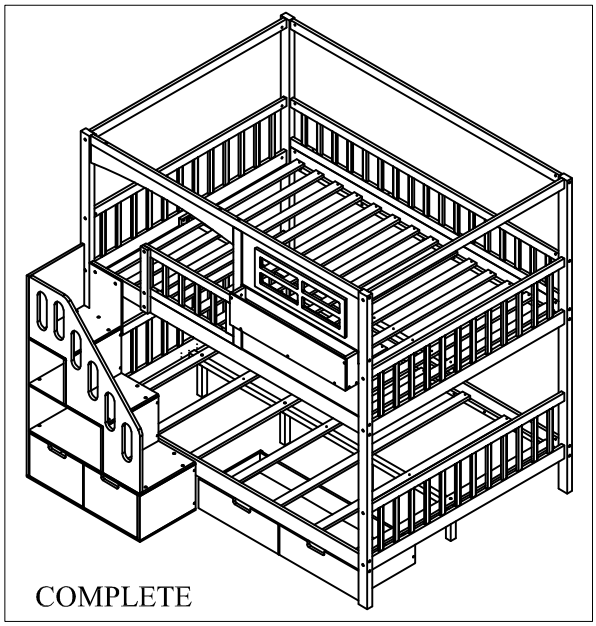

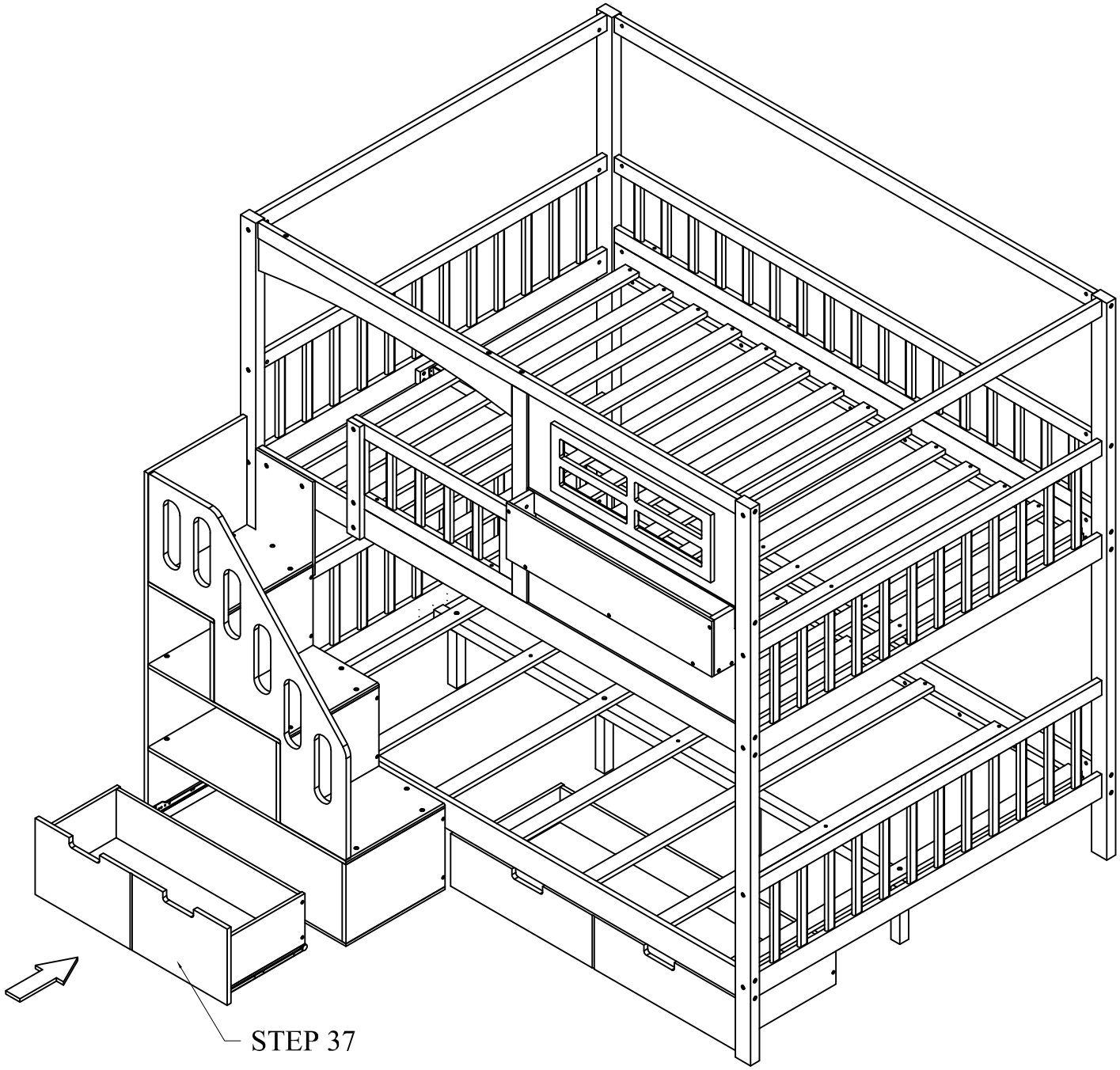

COMPLETE

