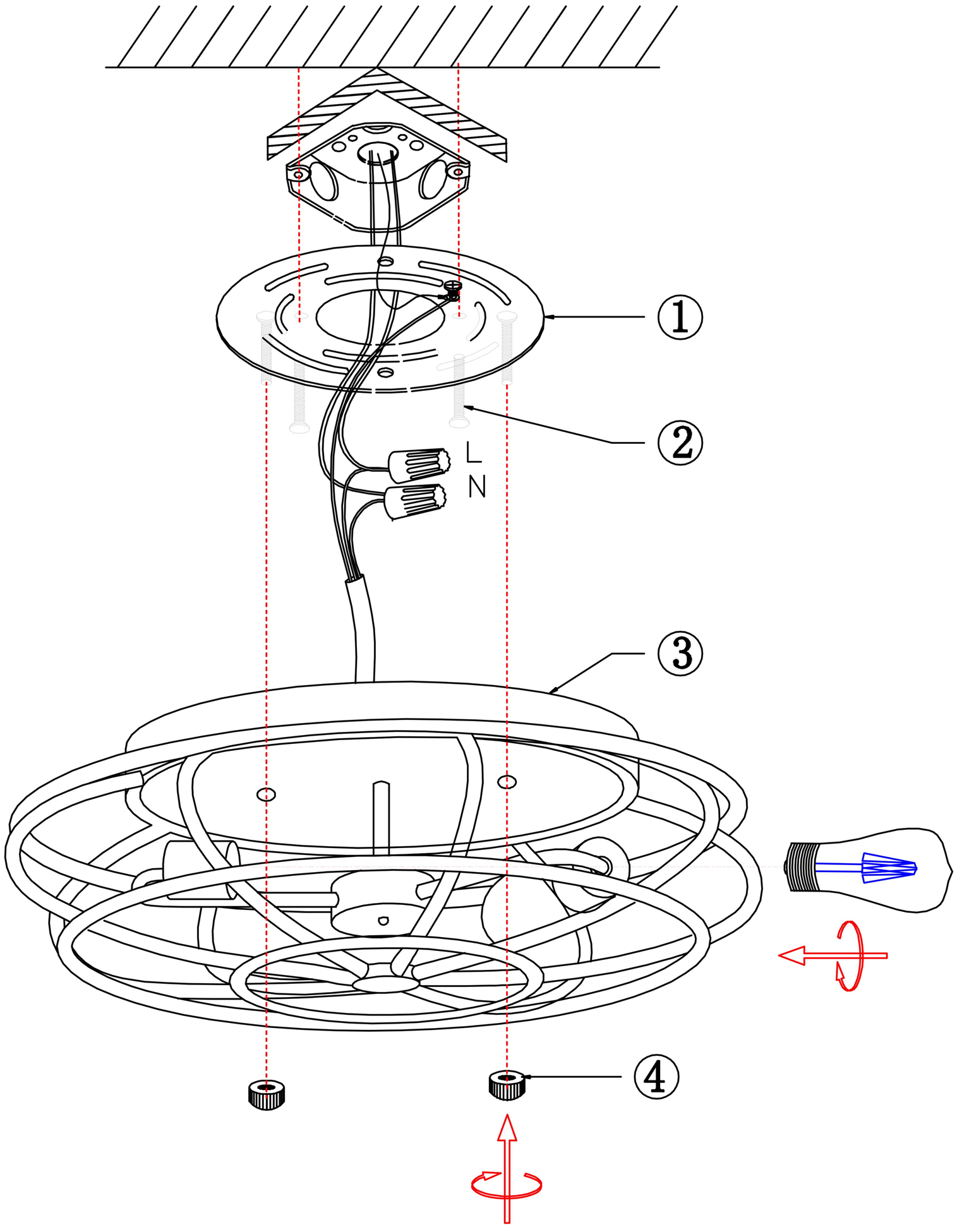

Installation Steps：

part1: Use the screws (2) to fix the mounting plate (1) to the ceiling.
part2: Use the screws on the mounting plate (1) to lock the ground wire on the mounting plate (1).
part3: With the fittings(5) in the P3 wiring cap will be the main line and the power cord of the positive "L" negative "N" poles are connected together.
part4: With a nut (4) will be the main body (3) fixed on the mounting plate (1).
part5: Installate the light bulbs (Bulbs are not included).

Notice： This light fixture should be installed in accordance with all applicable, local installation codes, and by a person familiar with the construction and operation of it, as well as the hazards involved. Inspect items and contents carefully. If any damage or defect is found, do not install it.

Accessories：

1：Mounting Plate*1

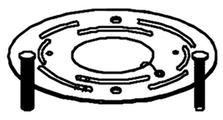

2：Screws*3

3：Shade*1

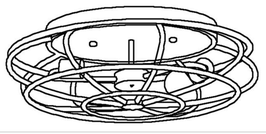

4：Nut*2

5：Fittings*1