INSTRUCTION MANUAL

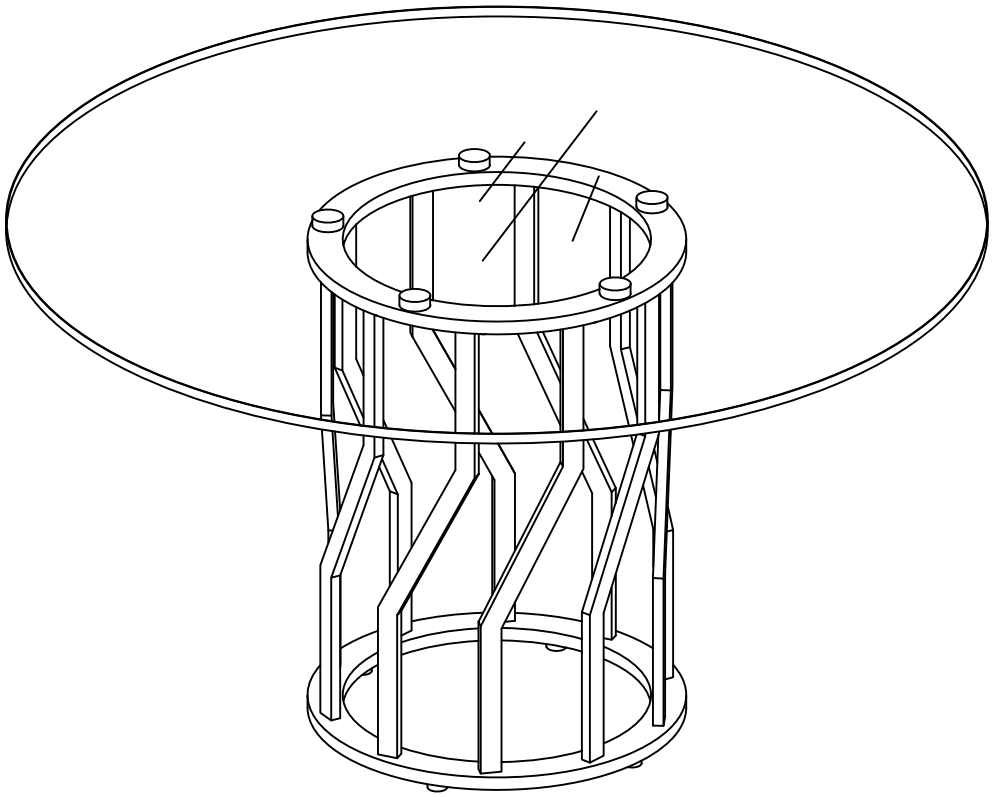

Attention:

If you encounter any problems during installation or use, pls feel free to contact us on shopping platform.We will provide you with a satisfactory solution within 24 hours.

Dining chair

1 - ITEMS DELIVERED-TECHNICAL DATA

2- ASSEMBLY

3 - CLEANING AND MAINTENANCE

1 - ITEMS DELIVERED-TECHNICAL DATA

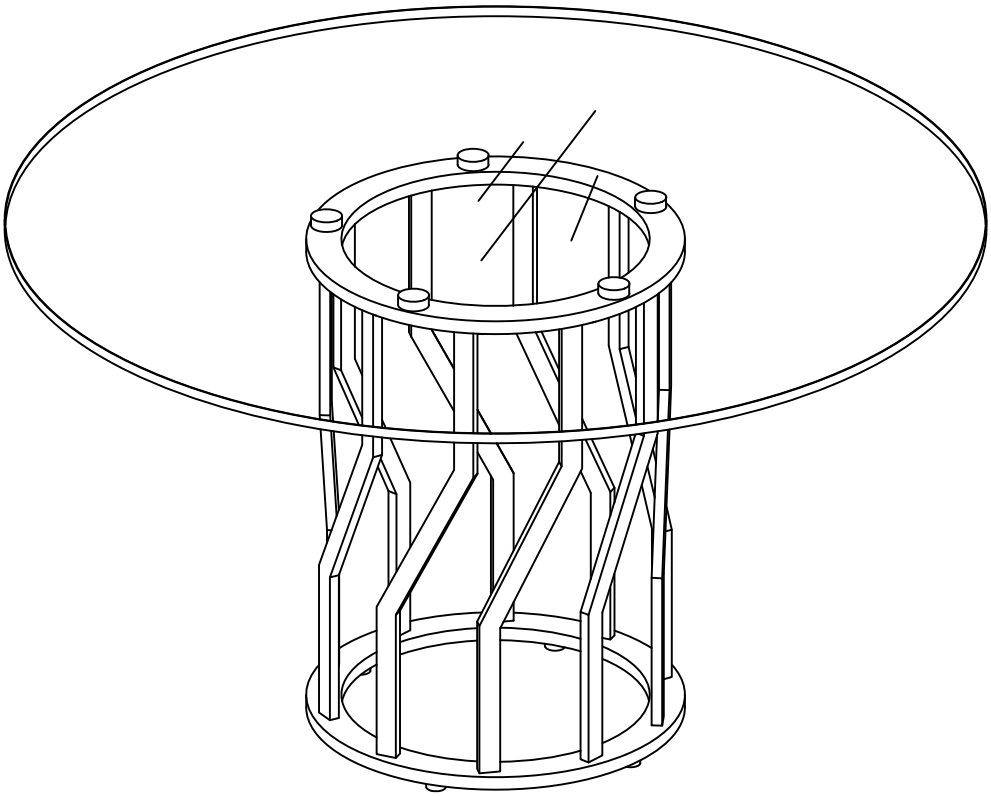

TO RISE

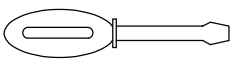

YOURSELF

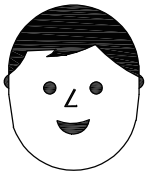

ASSEMBLY

2 - ASSEMBLY

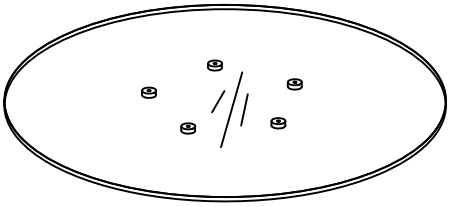 (A)*1	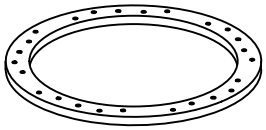 (B)*1
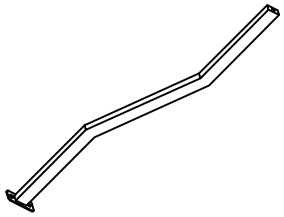 (C)*10	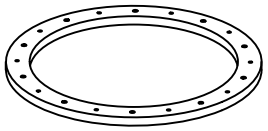 (D)*1
 (E)*20	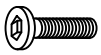 (F)*15
 (G)*5	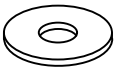 (H)*15
 (J)*1	 (K)*6
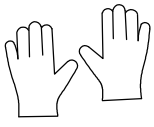 (L)*1	

1

(F)*5

(G)*5

(H)*5

(J)*1

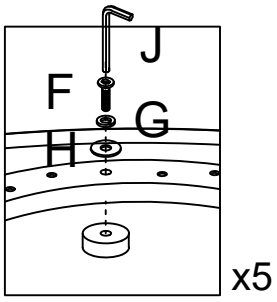

x5

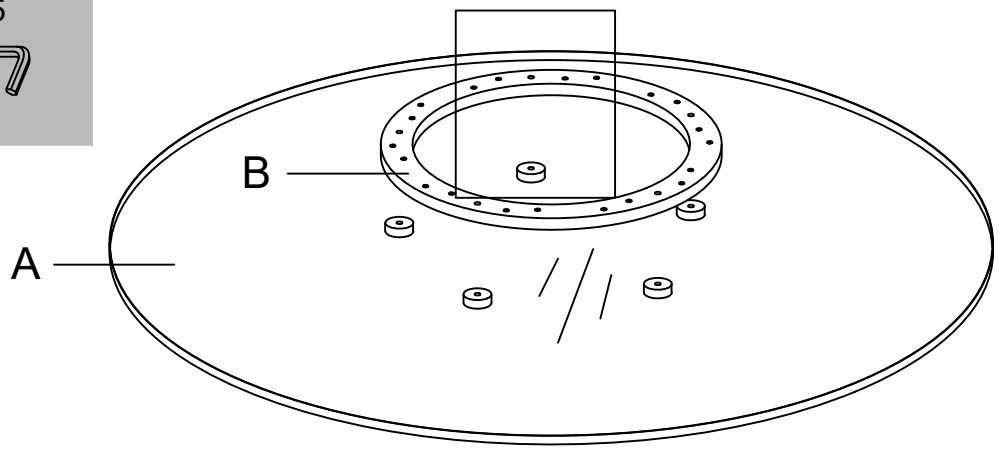

2

(E)*10

(J)*1

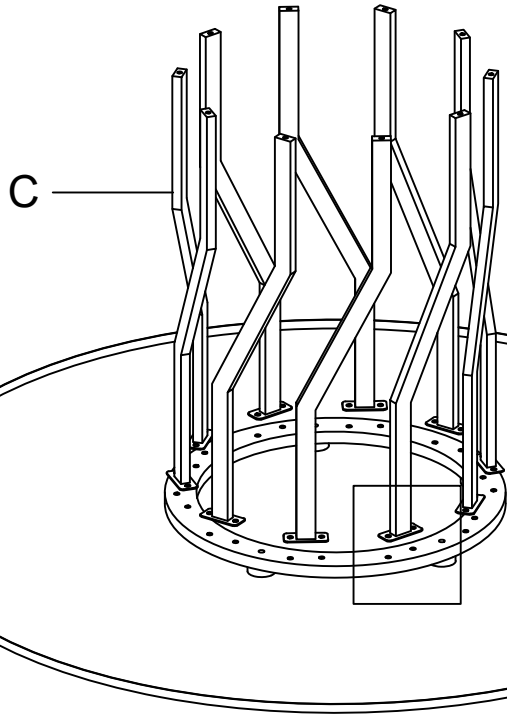

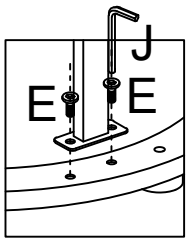

x10

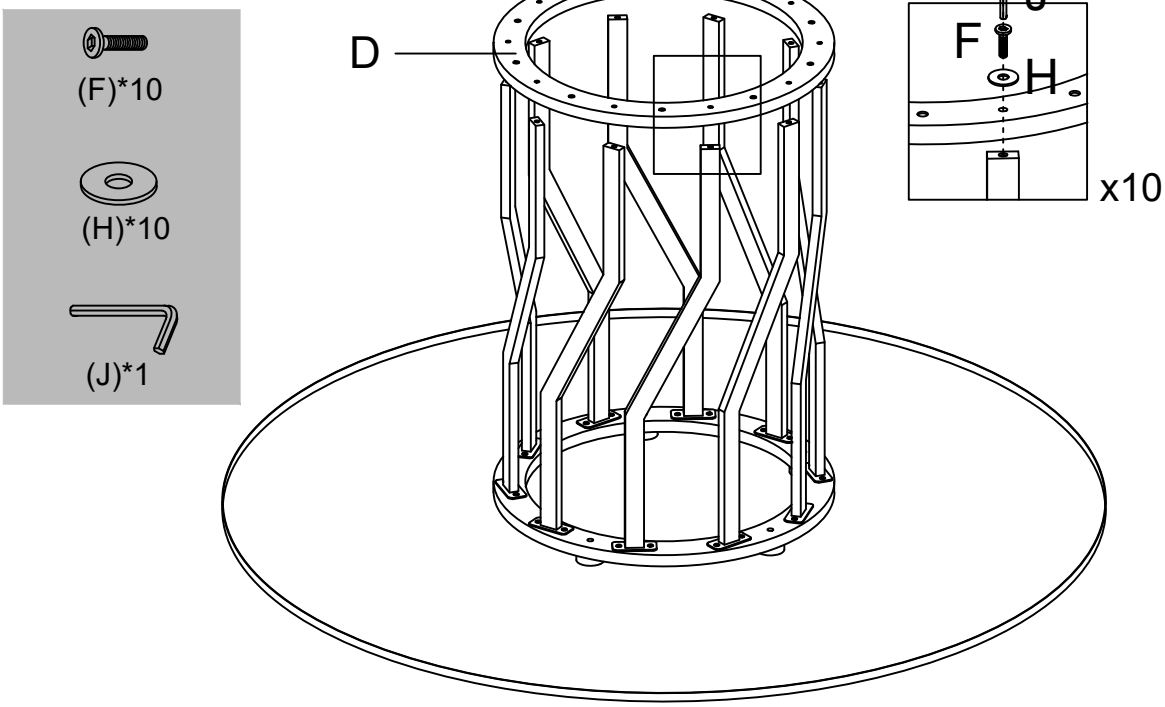

3

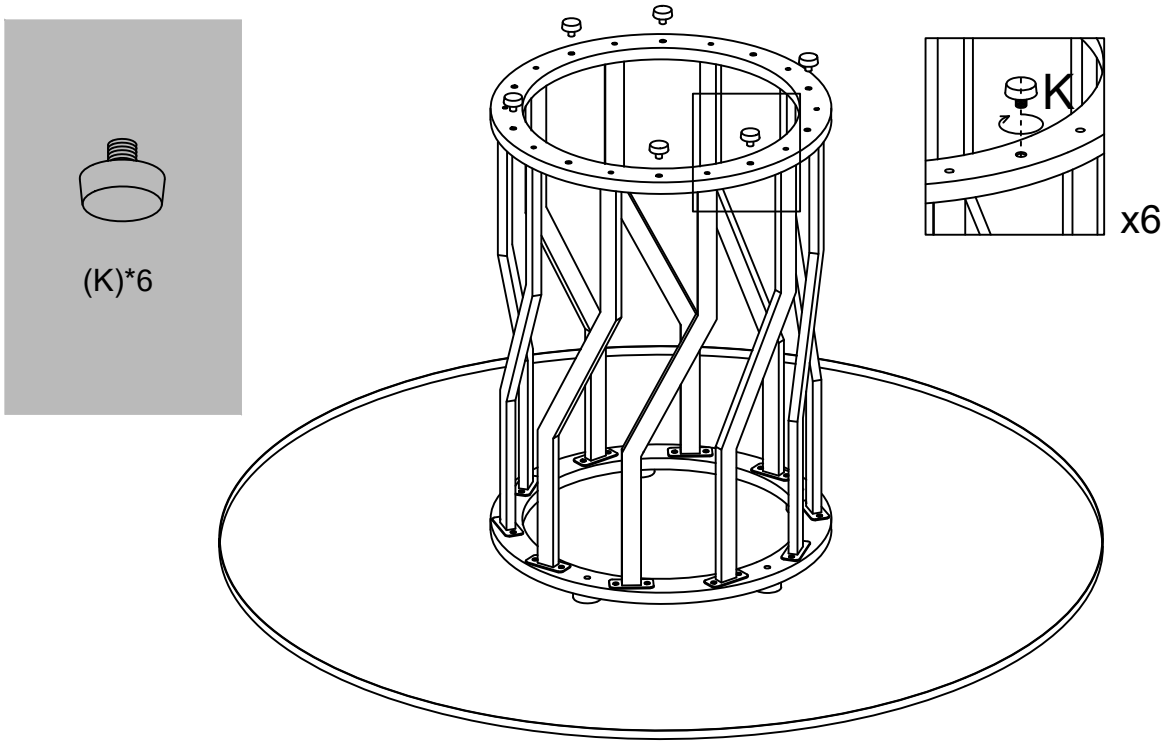

4

3 - CLEANING AND MAINTENANCE

·Do not use corrosive or abrasive for cleaning products.
·Clean with a soft cloth
·Don't interfere with metal objects in a mechanism, so that they are threatened with serious deterioration.