Rider Desk

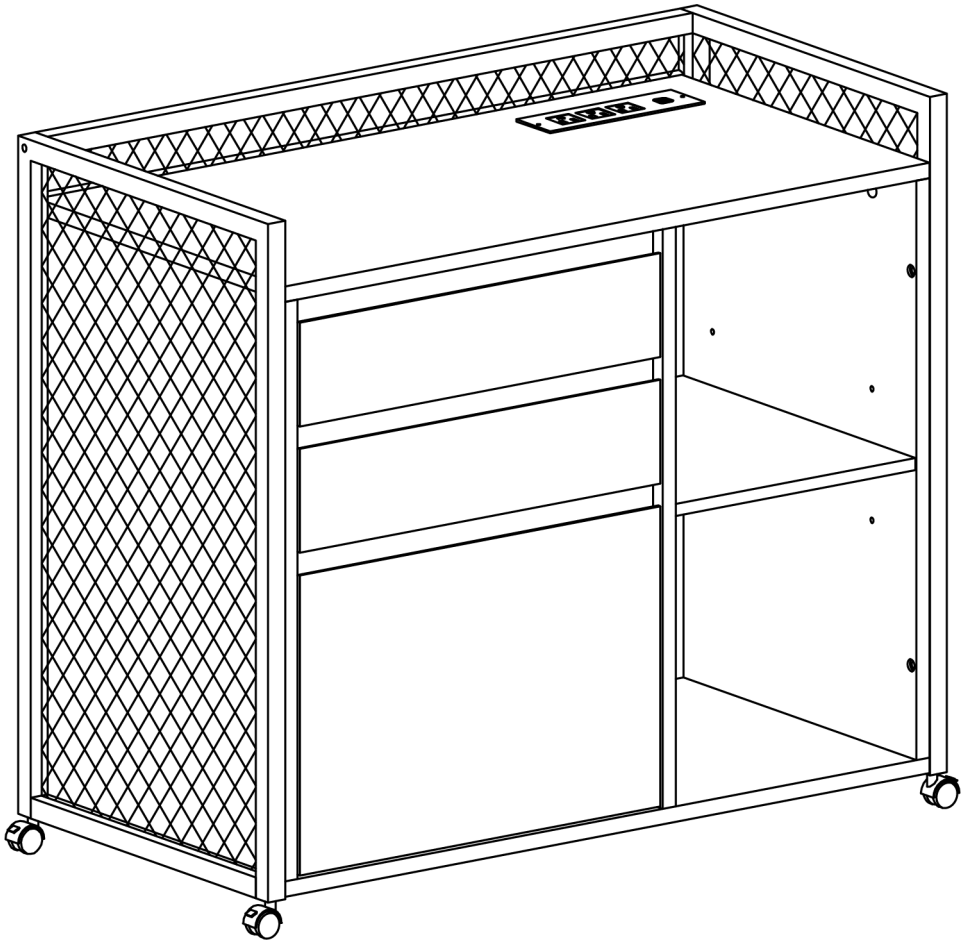

Estimated time for assembly:

90 mins

Weight limitations are as follows:

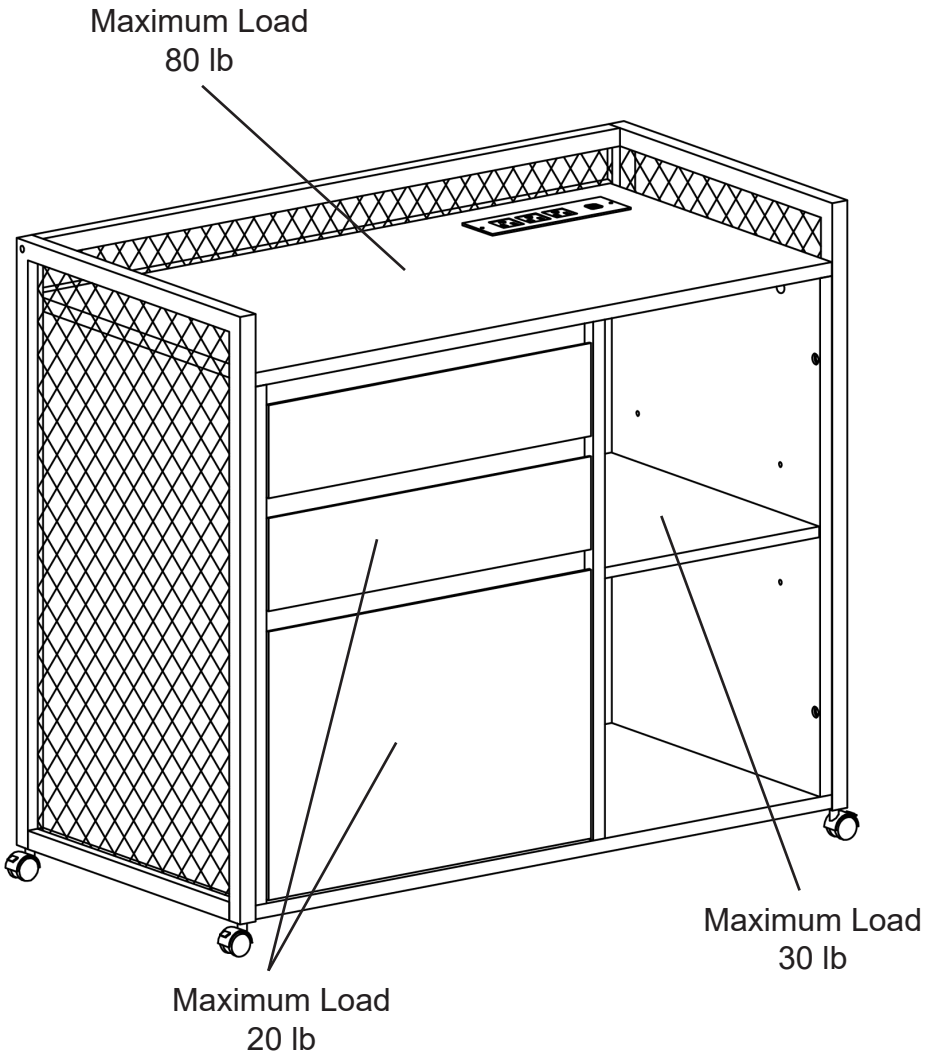

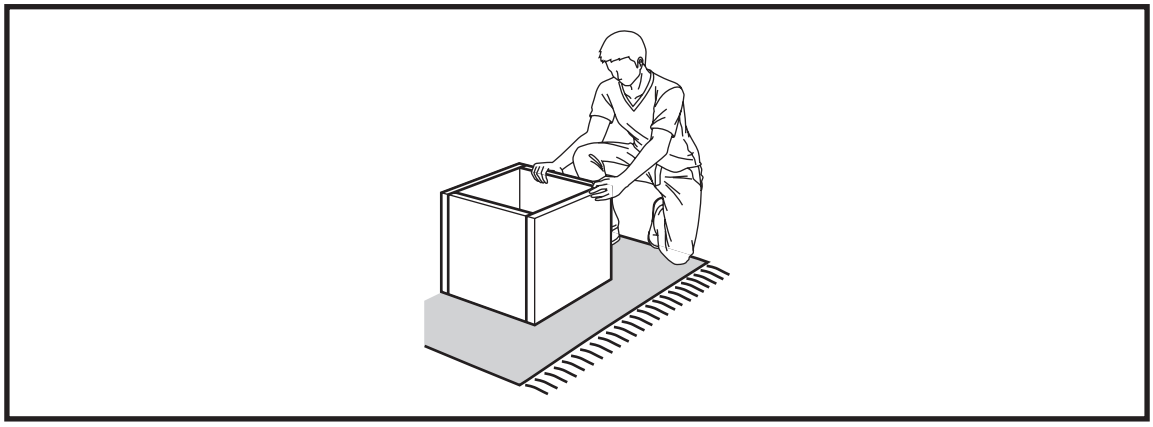

Assemble the furniture on an empty carton, carpet, or rug to prevent scratches or damage.

For safety, please keep pets and children away from the assembly area.

Ensure the product is fully assembled before use. If you are missing any hardware or products, do not use it until you have restored the missing parts.

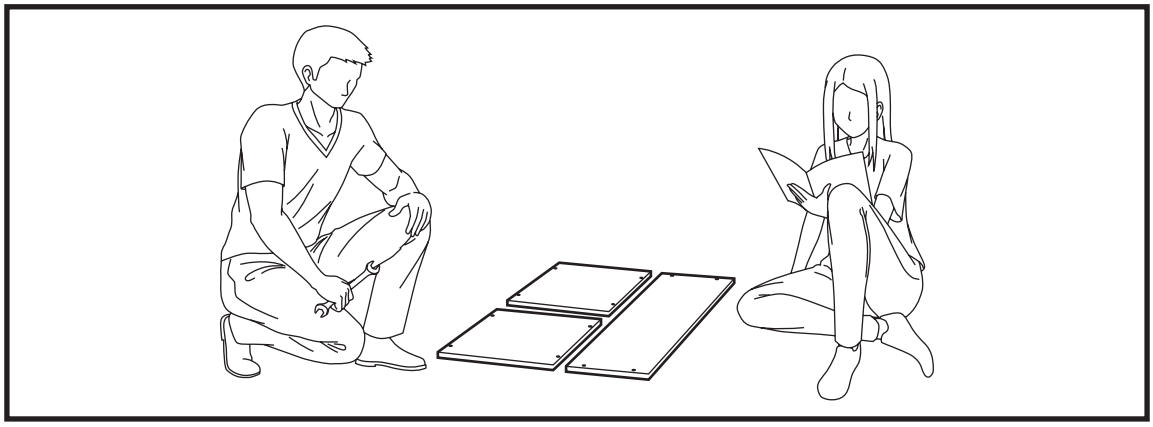

This furniture requires 2 people for assembly.

Read this instruction manual prior to assembly to familiarize yourself with the various steps.

Lay out all components and hardware separately on a flat surface and make sure that no parts are missing or damaged before assembly. Do not destroy or discard any packaging until you are certain that you have all the necessary parts for assembly.

Hand tight all hardwares and careful not to over tighten to avoid damaging the product.

CAUTION

There are small components used in the construction of this product.
Loose items should be kept away from pets and children to avoid a choking hazard.

Keep all plastic bags and packaging film away from pets and children to avoid suffocation.

PACKAGE CONTENTS

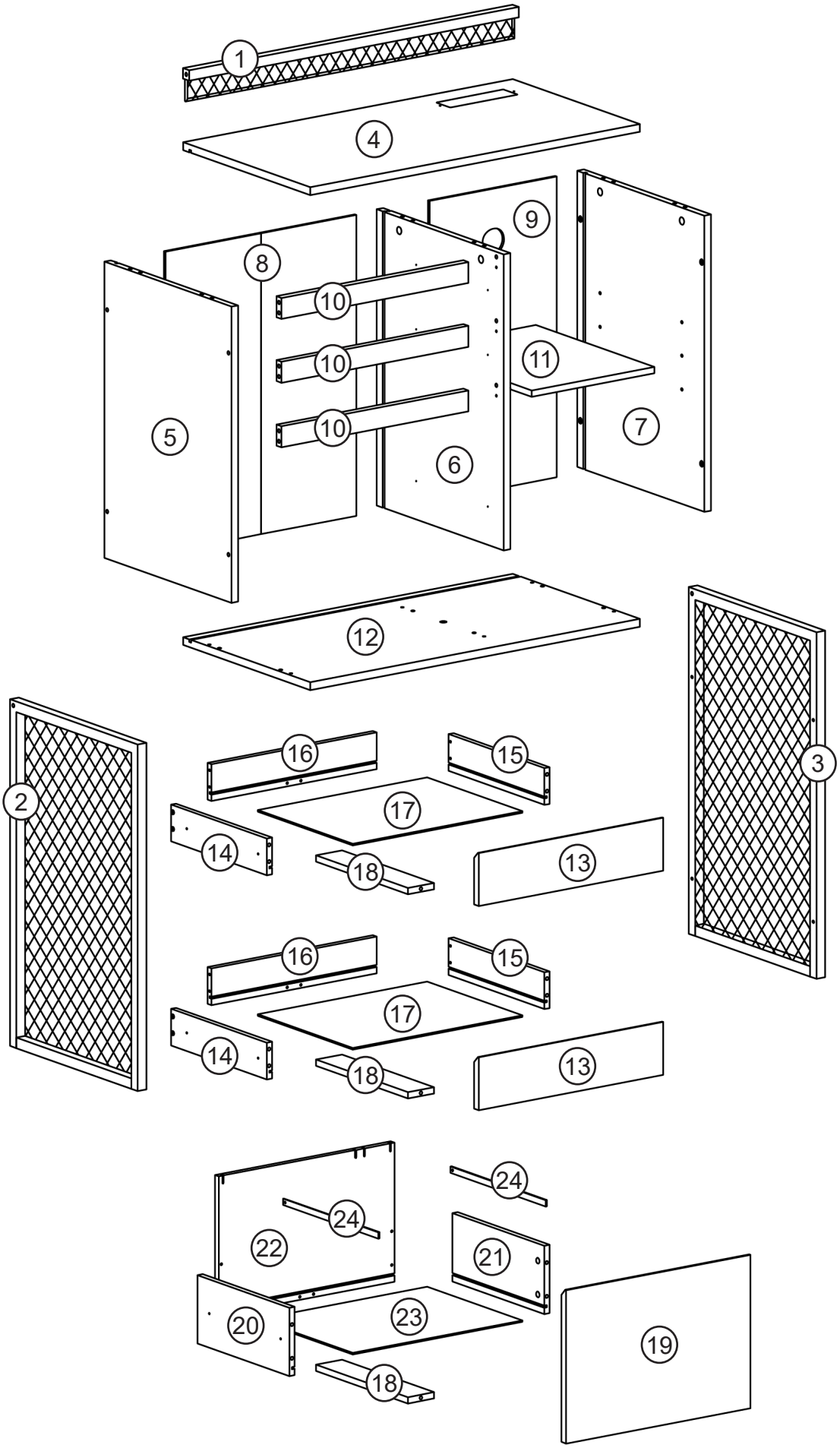

PACKAGE CONTENTS

CODE	DESCRIPTION	QTY
1	Top Wire Fence	1
2	Left Wire Fence	1
3	Right Wire Fence	1
4	Top Panel	1
5	Left Panel	1
6	Medial Panel	1
7	Right Panel	1
8	Left Back Panel	1
9	Right Back Panel	1
10	Crossbar	3
11	Storage Panel	1
12	Bottom Panel	1

PACKAGE CONTENTS

CODE	DESCRIPTION	QTY
13	Small Drawer Front Panel	2
14	Small Drawer Left Panel	2
15	Small Drawer Right Panel	2
16	Small frawer Back Panel	2
17	Small Drawer Bottom Panel	2
18	Drawer Support Bar	3
19	Document Drawer Front Panel	1
20	Document Drawer Left Panel	1
21	Document Drawer Right Panel	1
22	Document Drawer Back Panel	1
23	Document Drawer Bottom Panel	1
24	Document Drawer Hang Rail	2

PACKAGE CONTENTS

10x + 1x

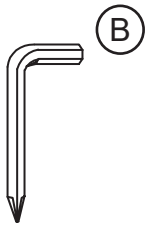

1x

18x + 1x

6x

12x + 1x

12x + 1x

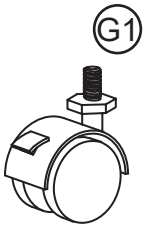

4x

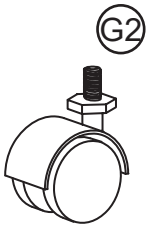

1x

4x

18x + 1x

15x + 1x

15x + 1x

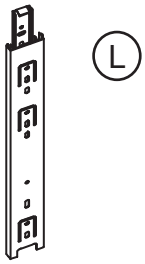

6x

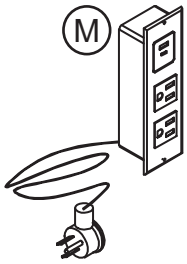

1x

26x + 2x

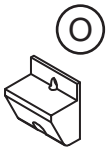

8x

8x

12x

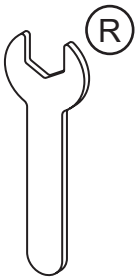

1x

Install all hardware perpendicular to the opening.

Required tools for assembly (Not included)

1

Detach the slide runner from the slide mount.

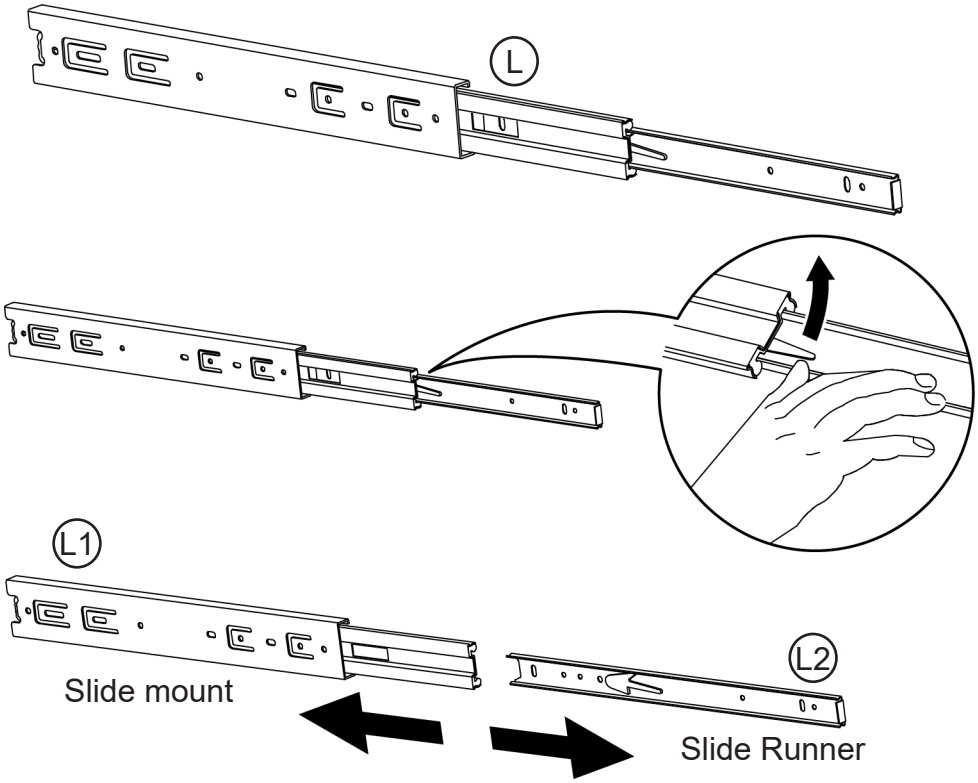

2

L1 6x

Ø3.5 x 12mm

N 12x

Attach slide mount on the left and medial panels (5, 6).

Make sure to insert screws in the correct opening.

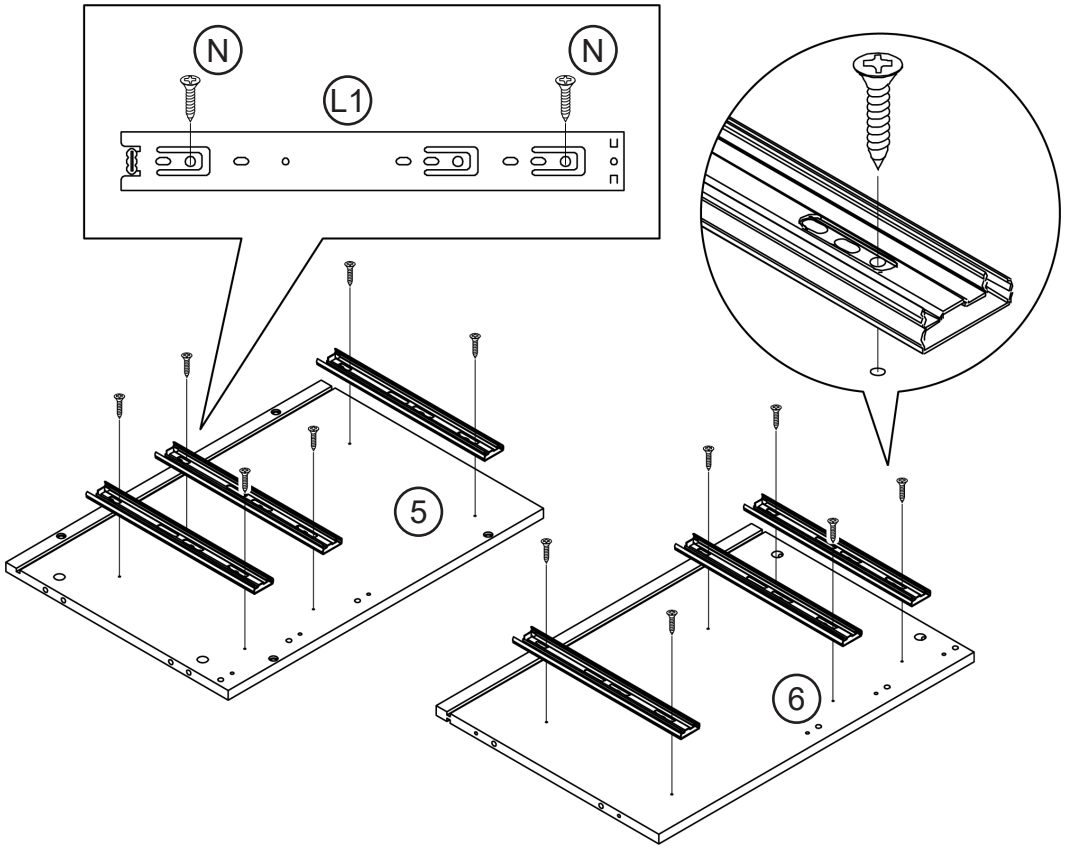

3

M6 x 35mm

E 6x

Attach cam bolts to the left and medial panels (5, 6).

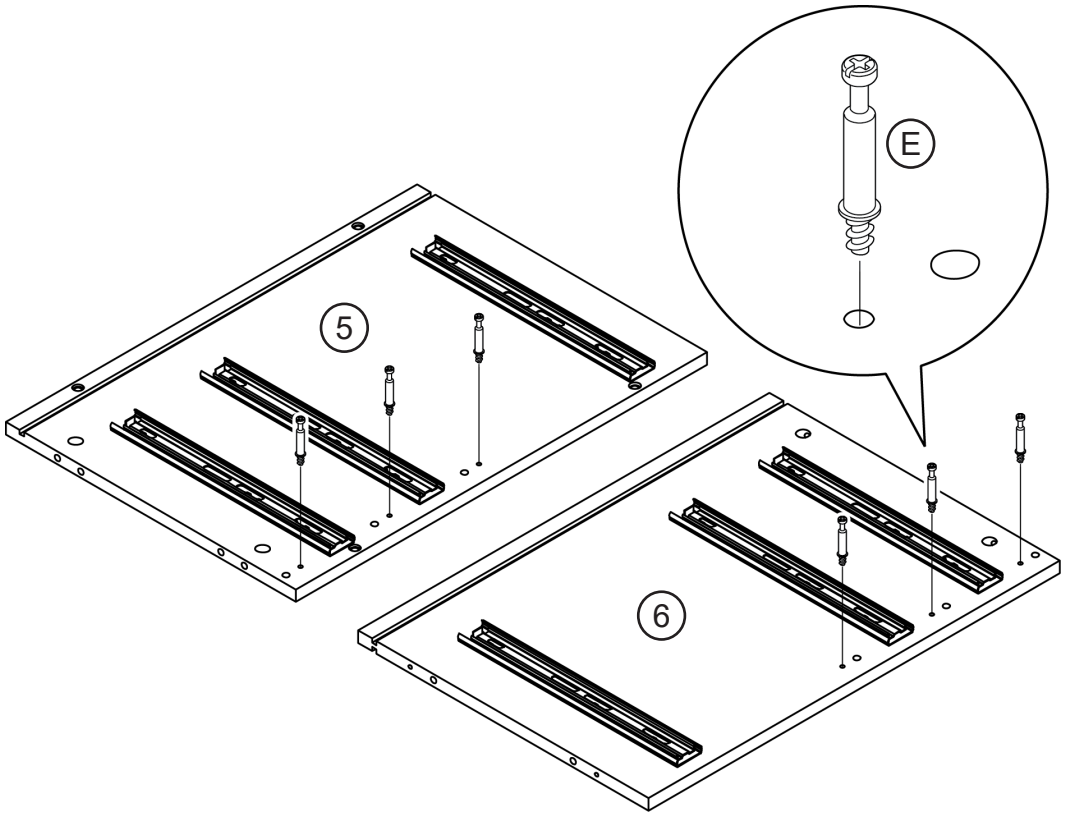

4

Assemble the cross bars (10) to the medial panel (6).

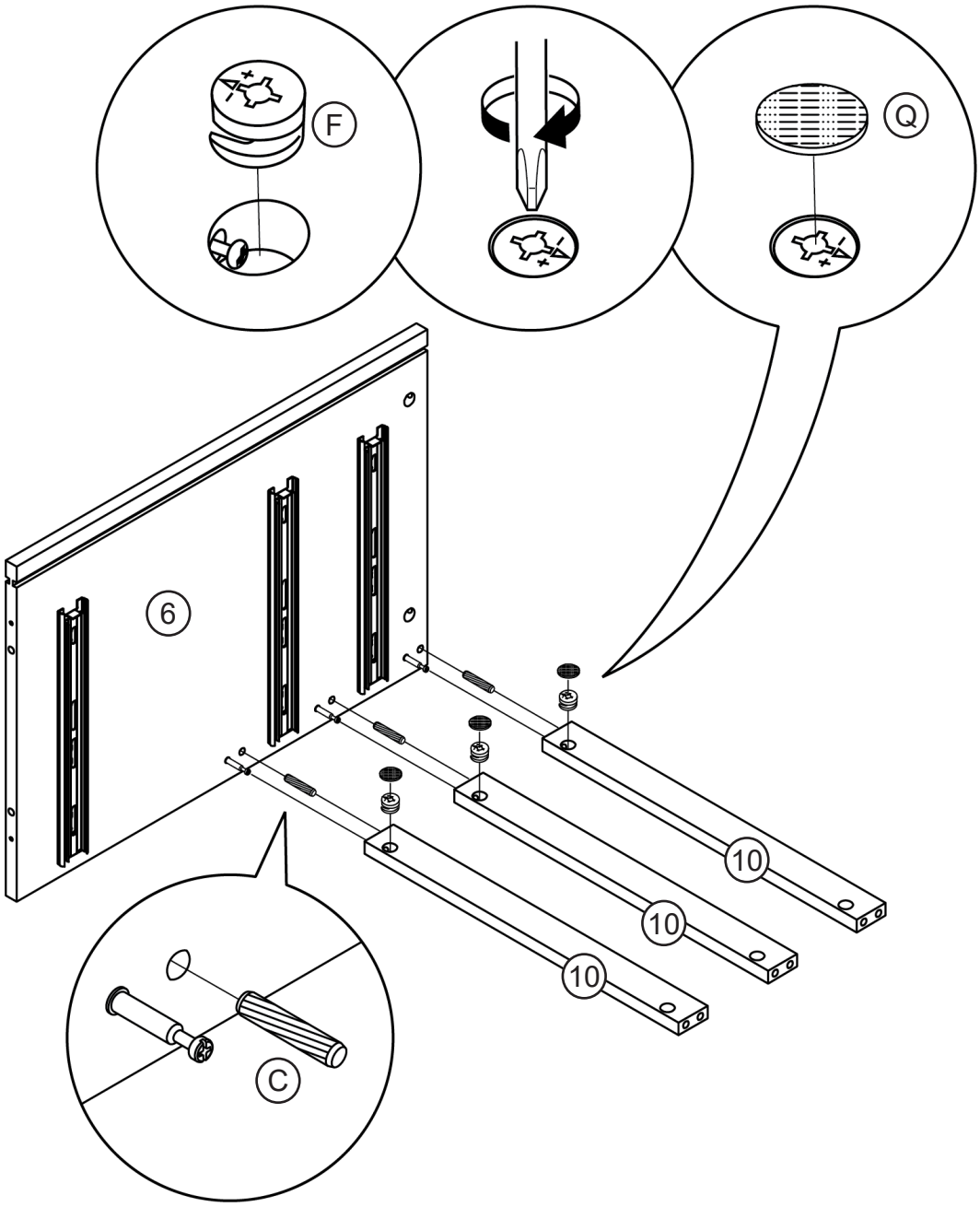

5

Attach the left panel (5) to the other end of the crossbars (10).

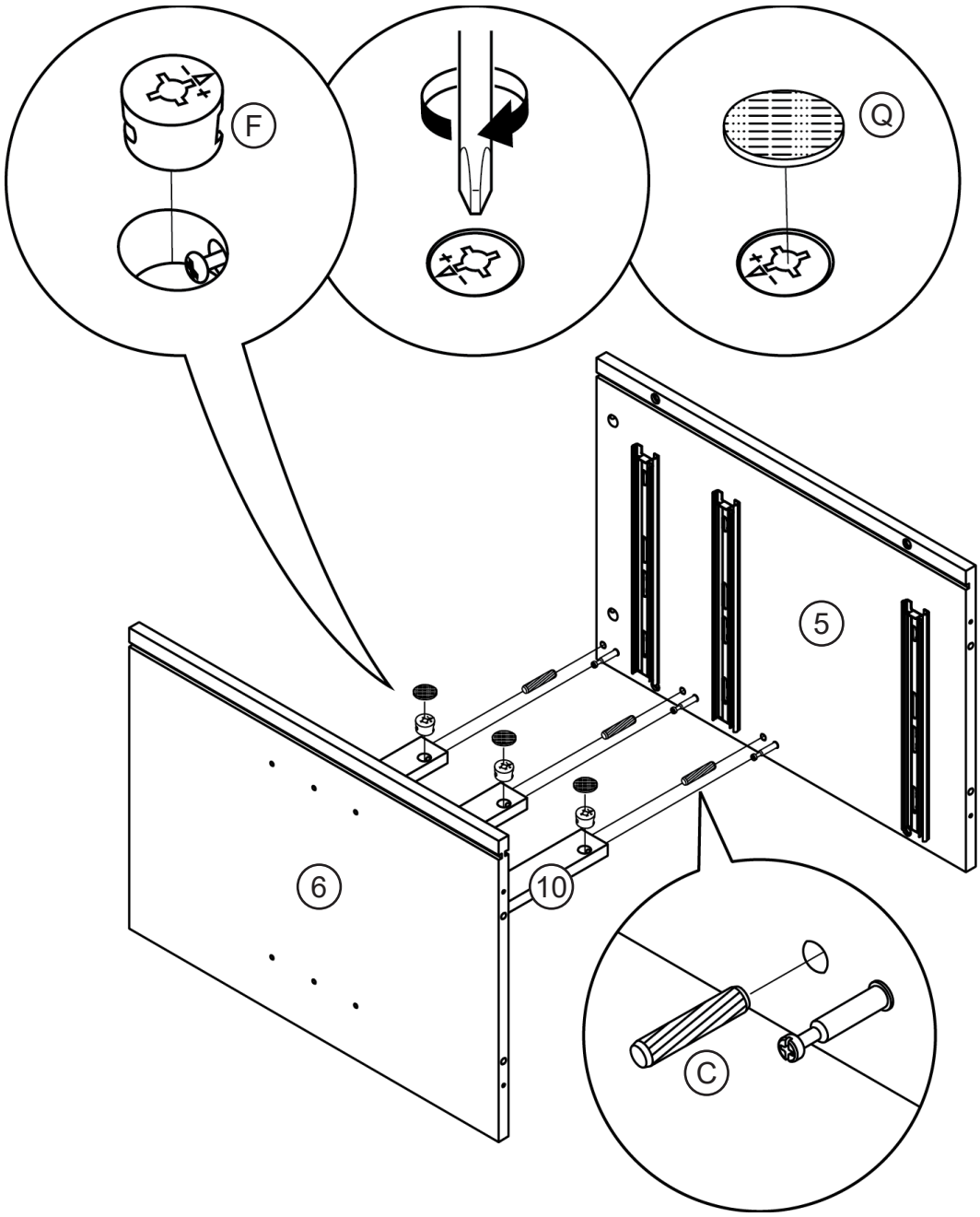

6

E 6x

Attach cam bolts to the underside of the top panel (4).

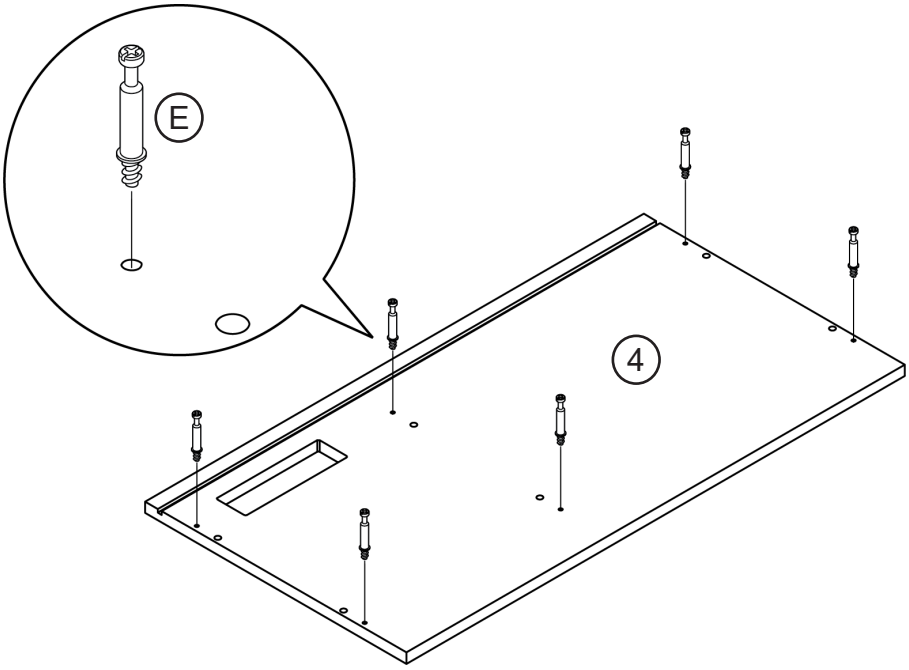

7

C 4x

F 4x

Q 4x

Assemble the top panel (4) on top of the left and medial panels (5, 6).

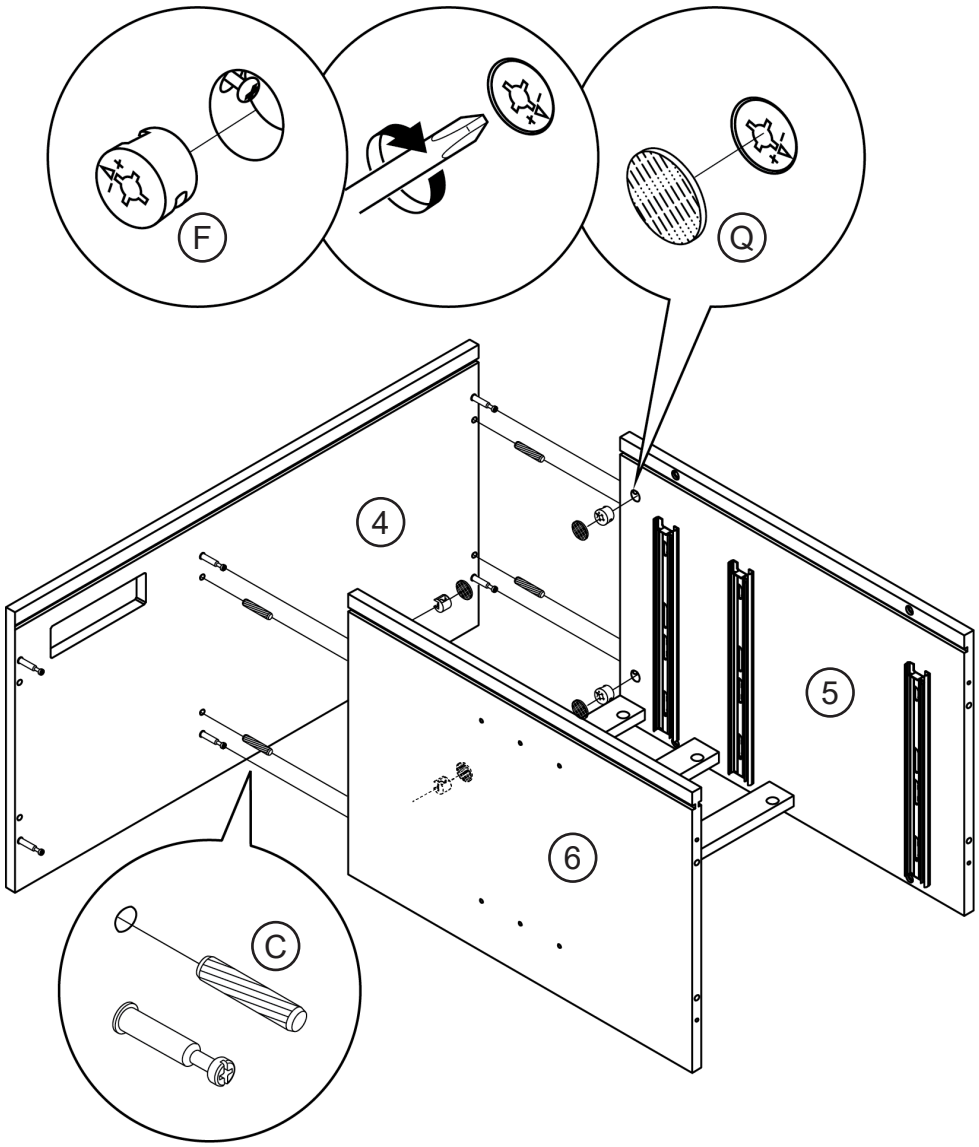

8

Assemble the right panel (7) underneath the top panel (4).

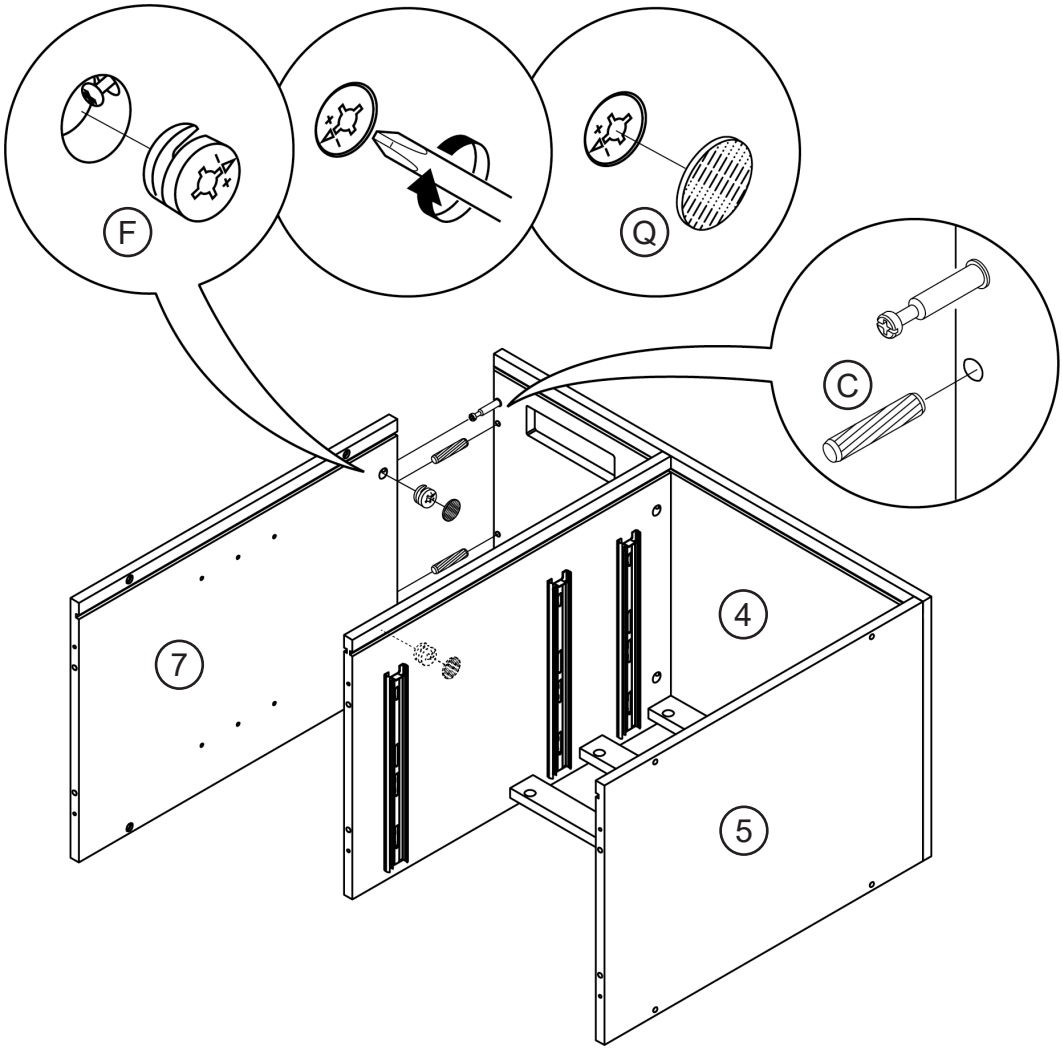

9

Slide the back panels (8, 9) to the back of the assembly.

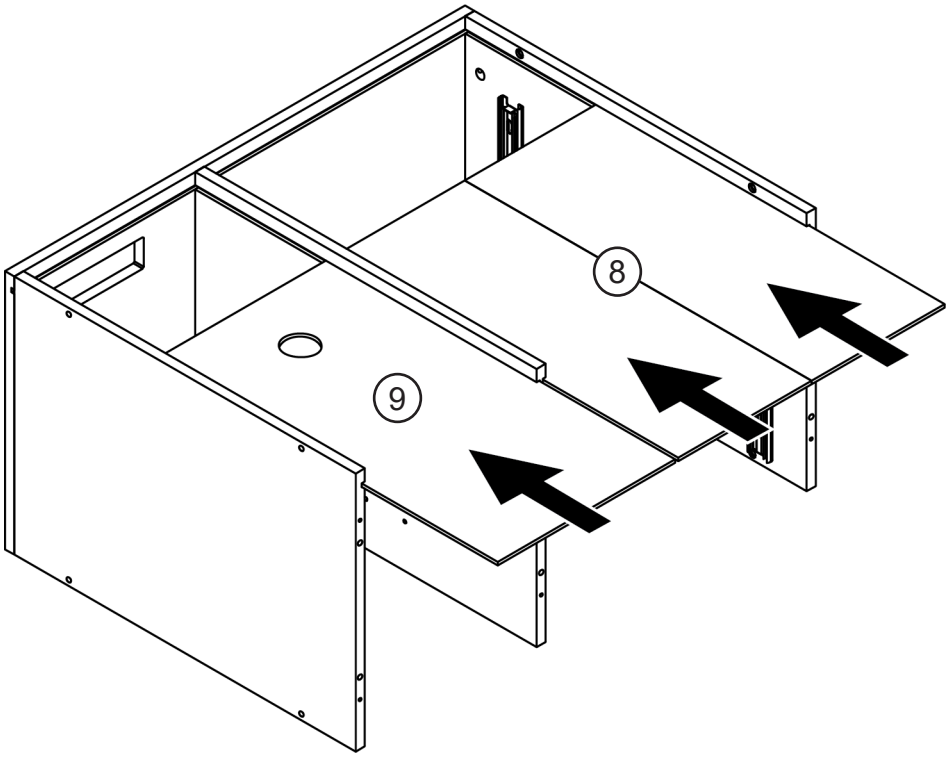

10

C 6x

D 6x

Attach the bottom panel (12) underneath the assembly.

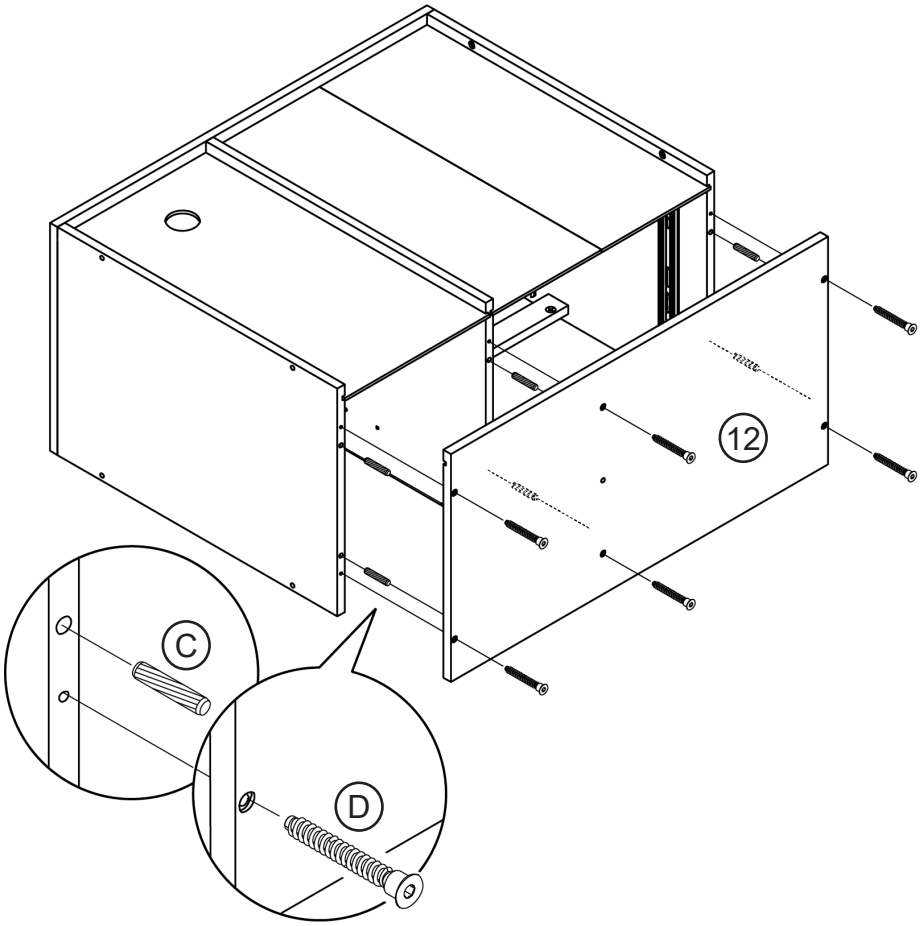

11

A 5x

Attach the top wire fence (1) on top of the top panel and the right wire fence (3) to the right panel.

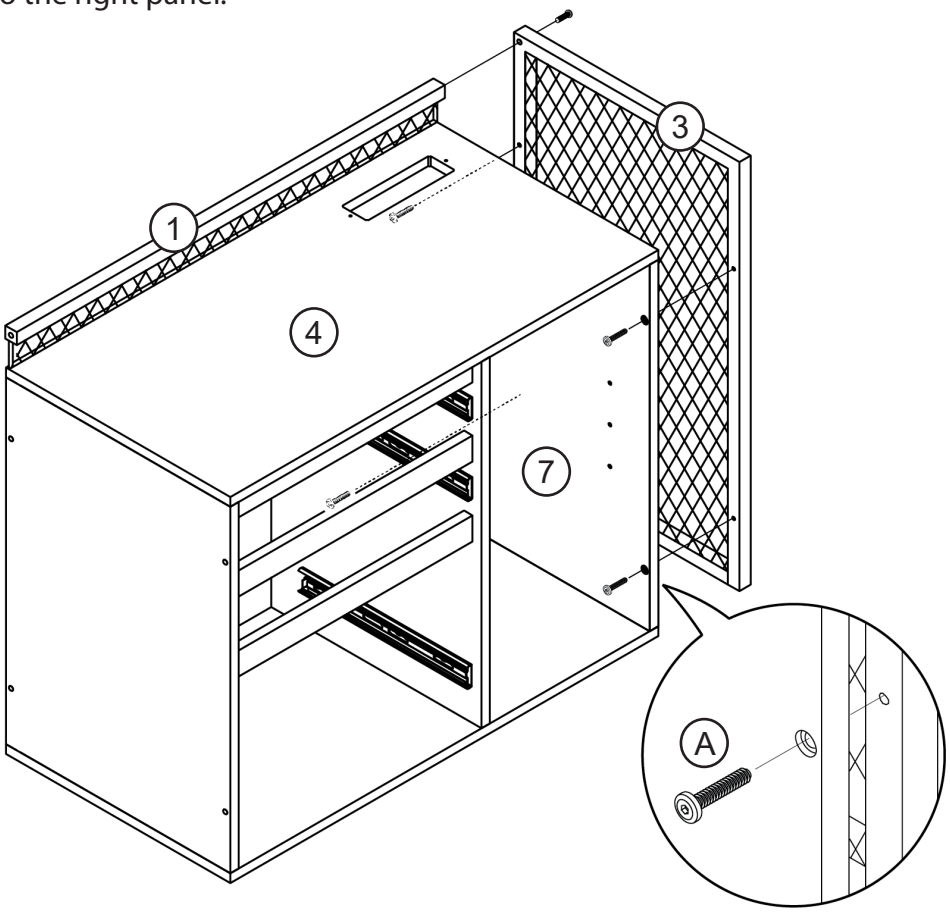

12

(A) 5x

Attach the left wire fence (2) to the left panel.

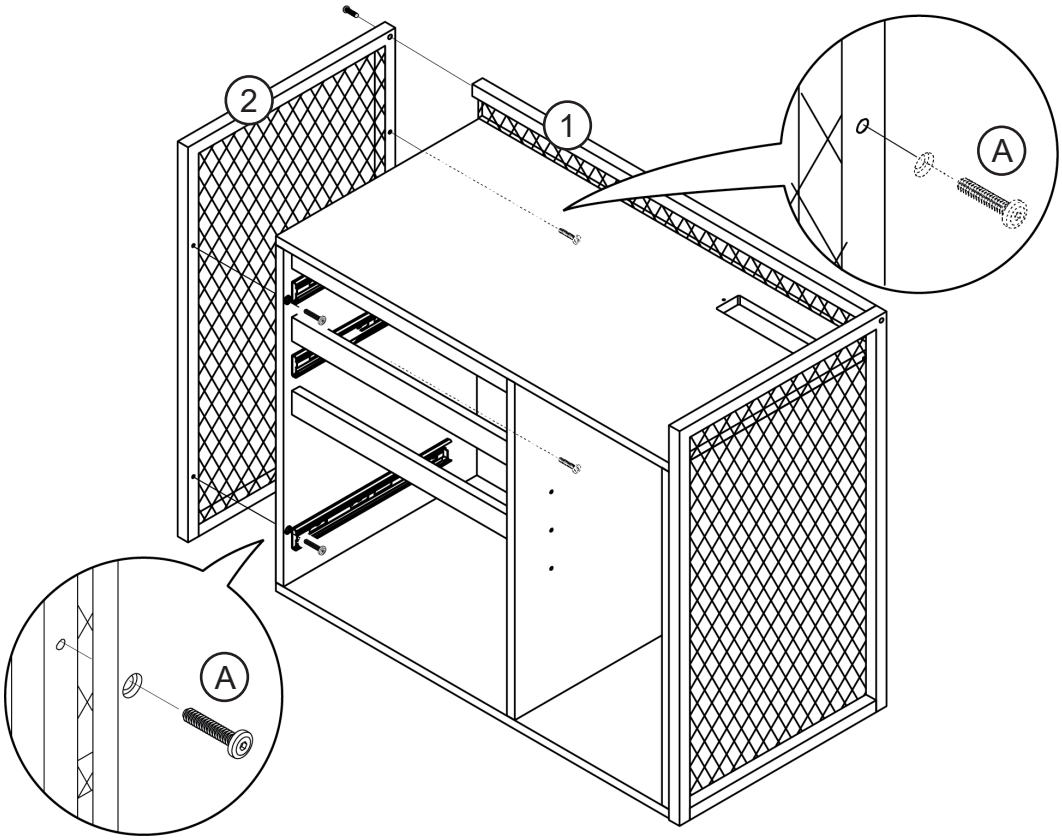

13

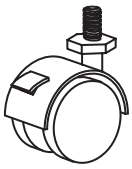

(G1) 4x

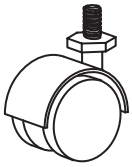

(G2) 1x

Attach locking casters (G1) to the corner and a non-locking caster (G2) to the middle of the bottom panel (12).

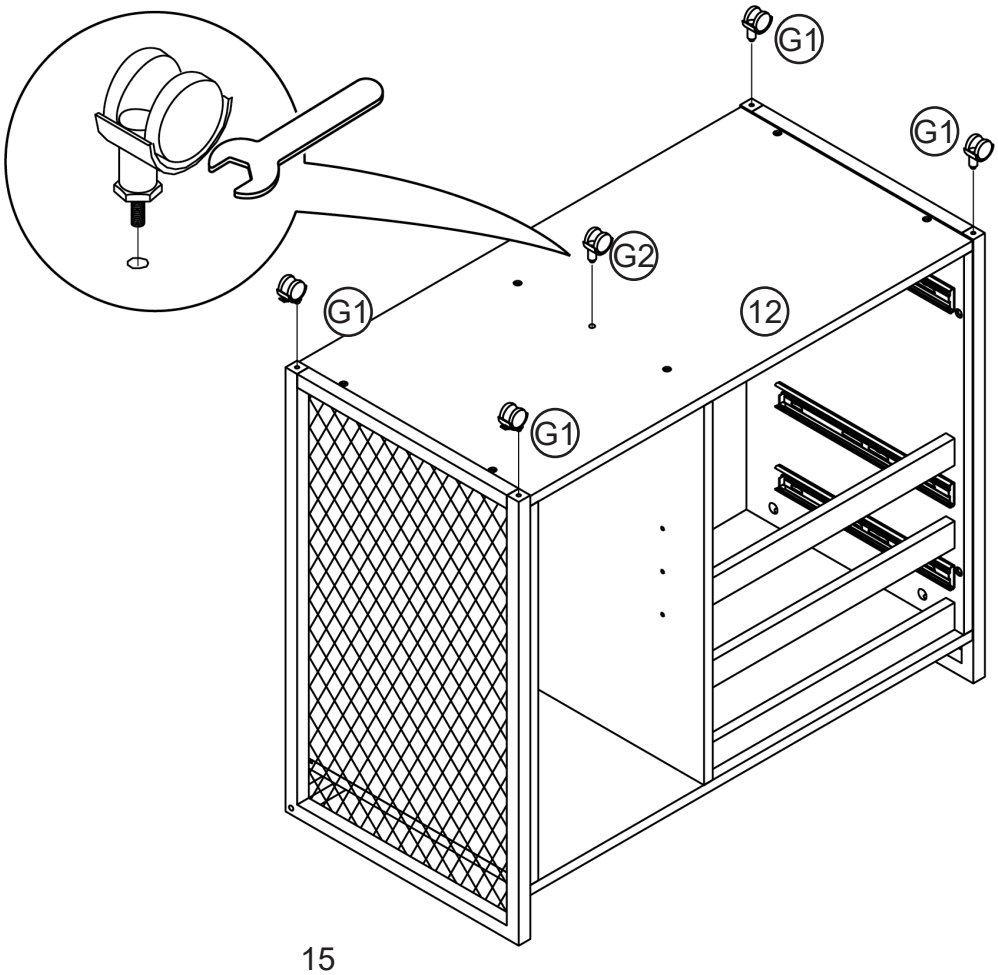

14

O 8x

Ø3 x 16mm

P 8x

Secure the back panels.

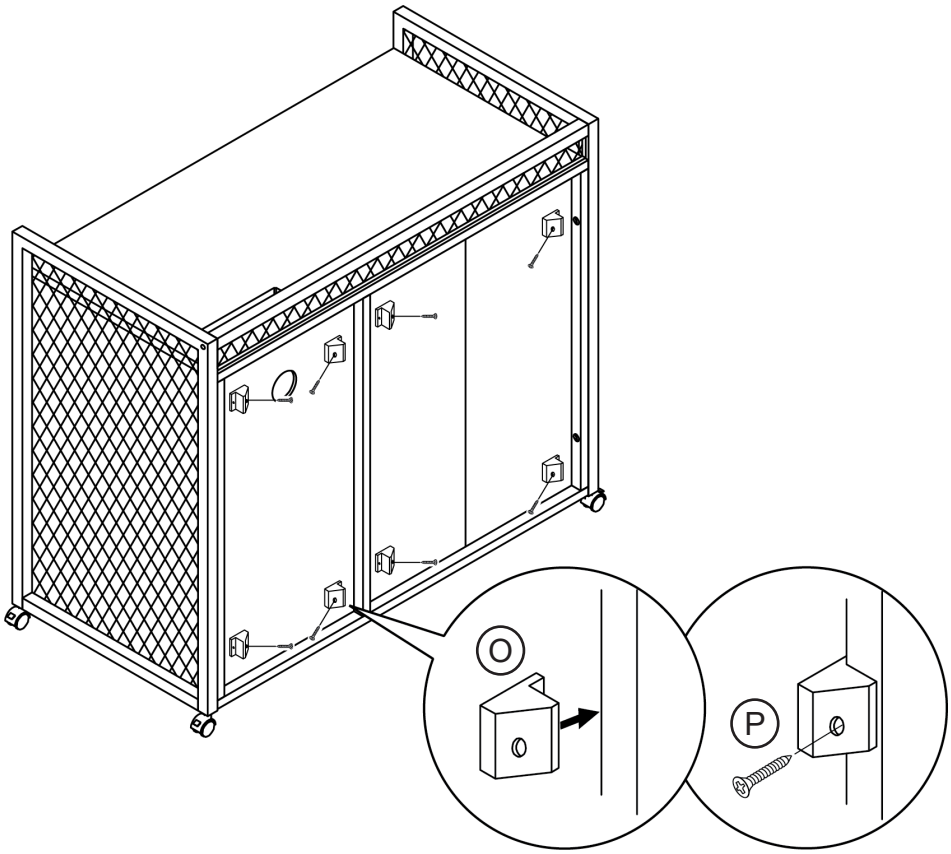

15

M 1x

Ø3.5 x 12mm

N 2x

Attach the electric outlet strip on the top panel (4).

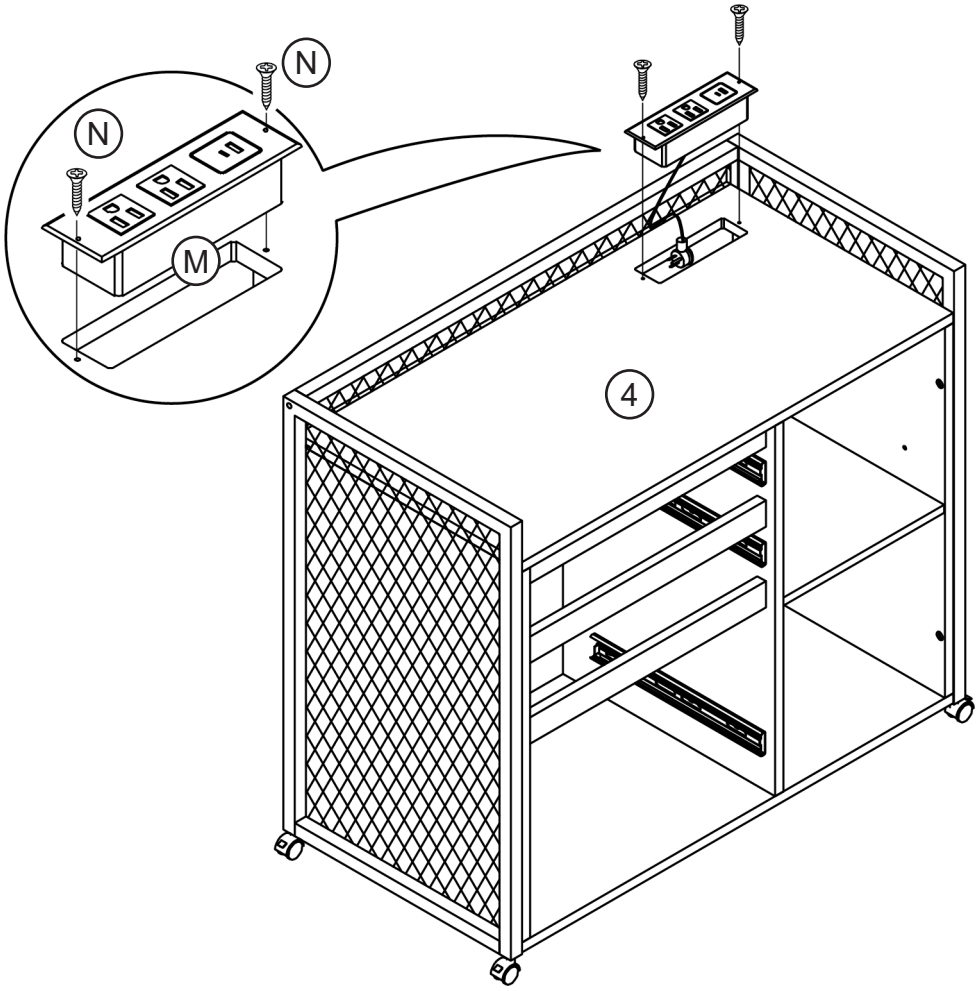

16

Attach the slide runners to the small drawers left and right panels (14, 15) and the document drawer left and right panel (20, 21).

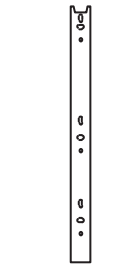

L2 6x

Ø3.5 x 12mm

N 12x

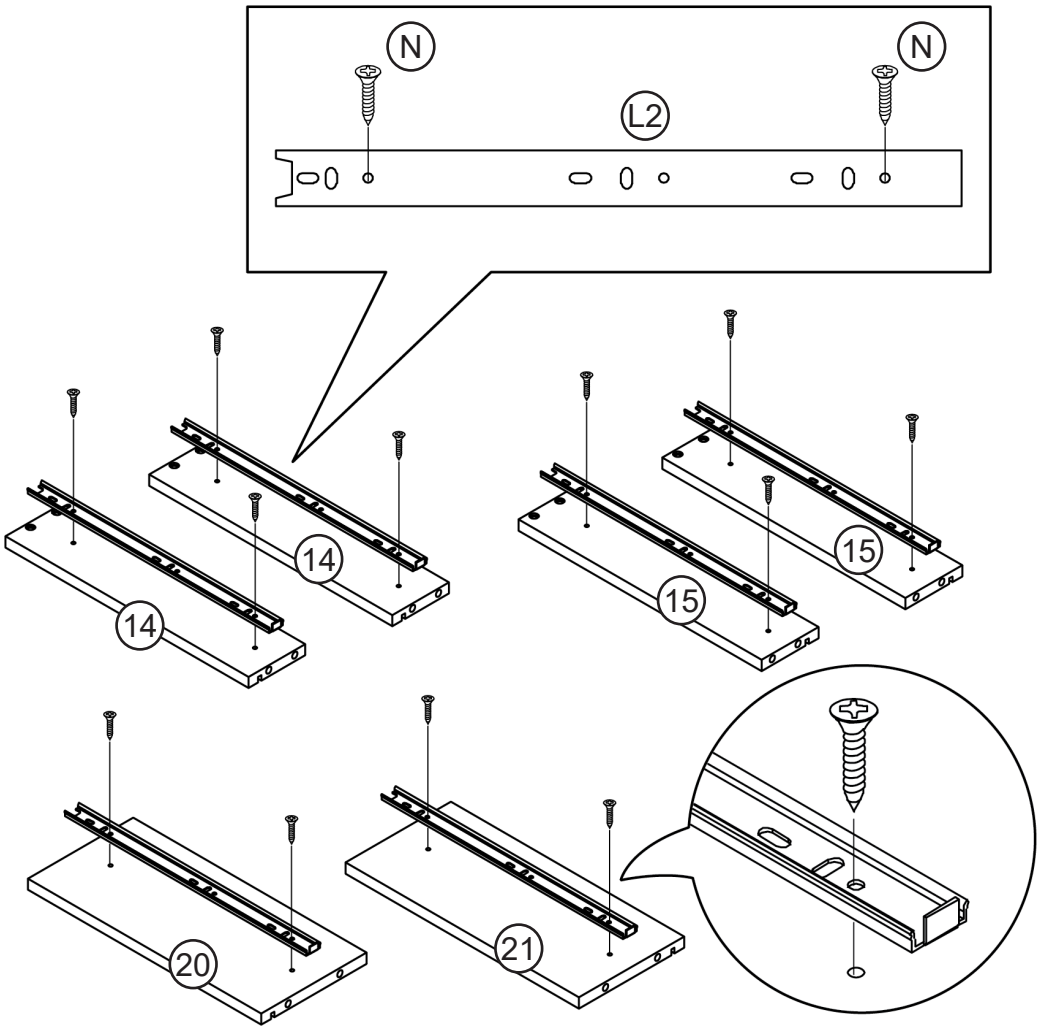

17

Attach cam bolts to the small drawer front panel (13) and the document drawer front panel (19).

M6 x 28mm

J 15x

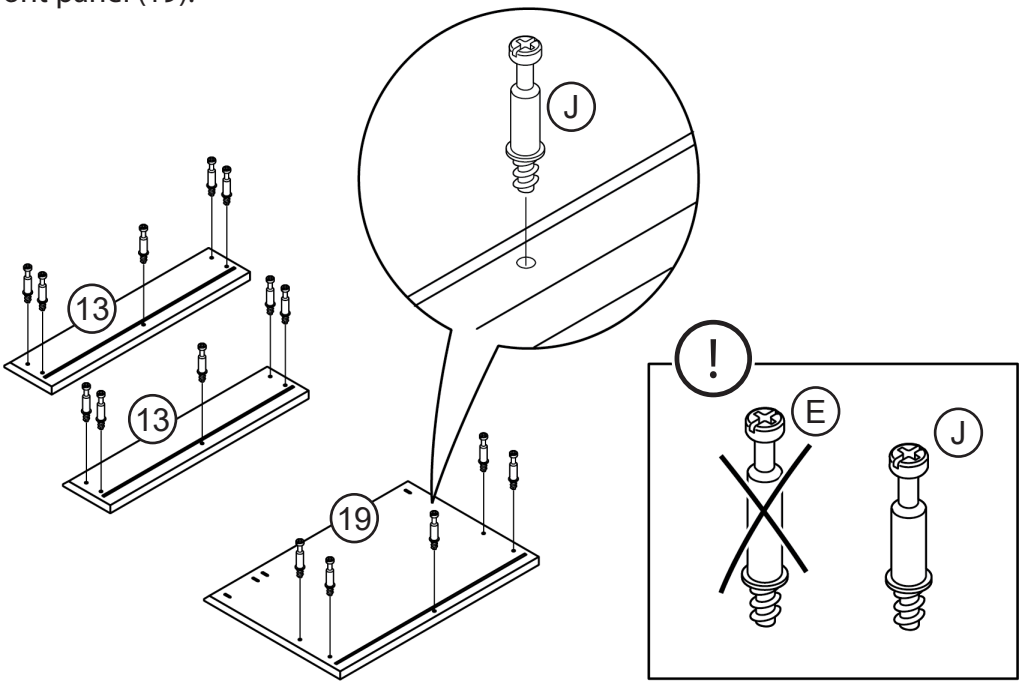

NOTE: Make sure to use the correct cam bolt.

18

Ø12 x 10mm

K 15x

Assemble the small drawer left panel, right panel, and support bar (14, 15, 18) to the small drawer front panel (13). Then Assemble the document drawer left panel, right panel, and support bar (18, 20, 21) to the document drawer front panel (19).

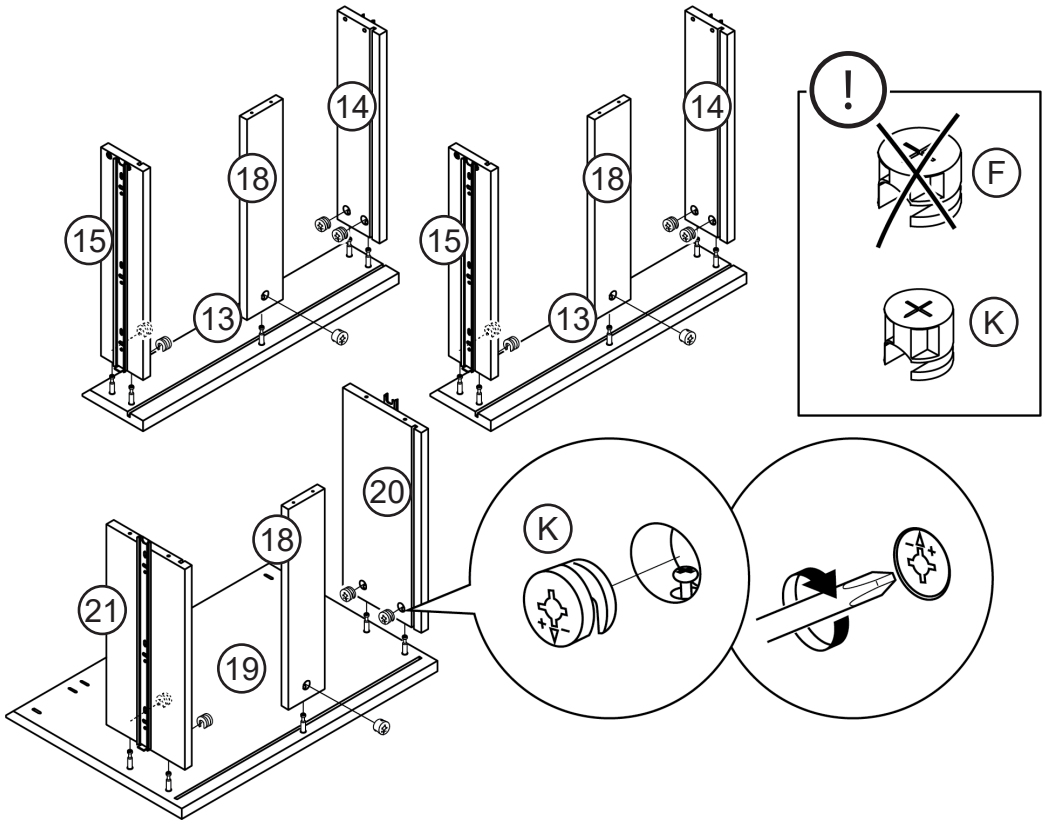

19

Ø4 x 28mm

I 18x

Slide in the drawer bottom panels (17/23), then assemble the drawer back panels (16 /22) to the drawer assembly.

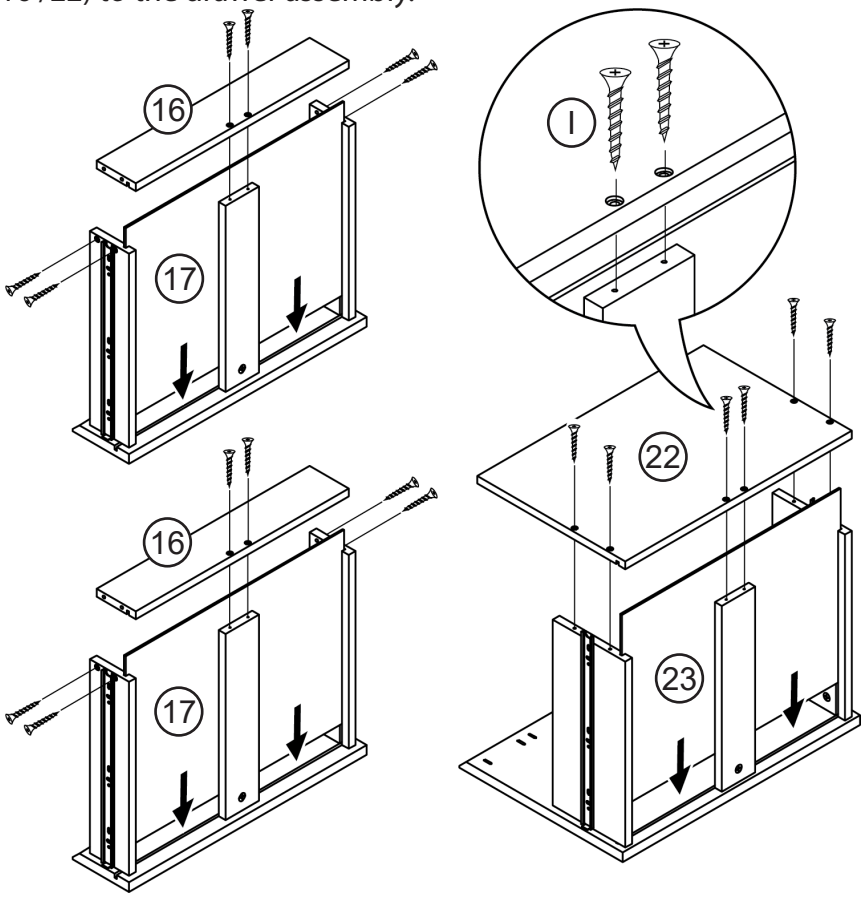

20

Slide the drawers into the stand assembly.

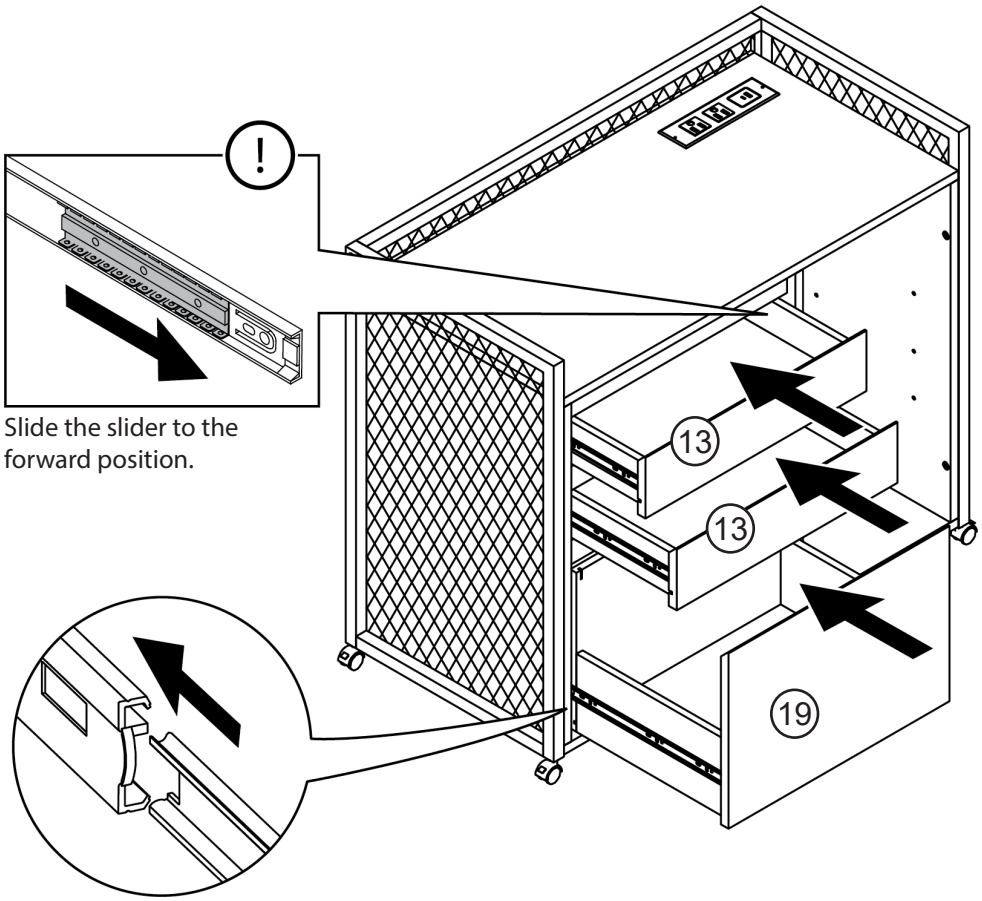

Slide the slider to the forward position.

21

Insert hang rails (24) to the document drawer.

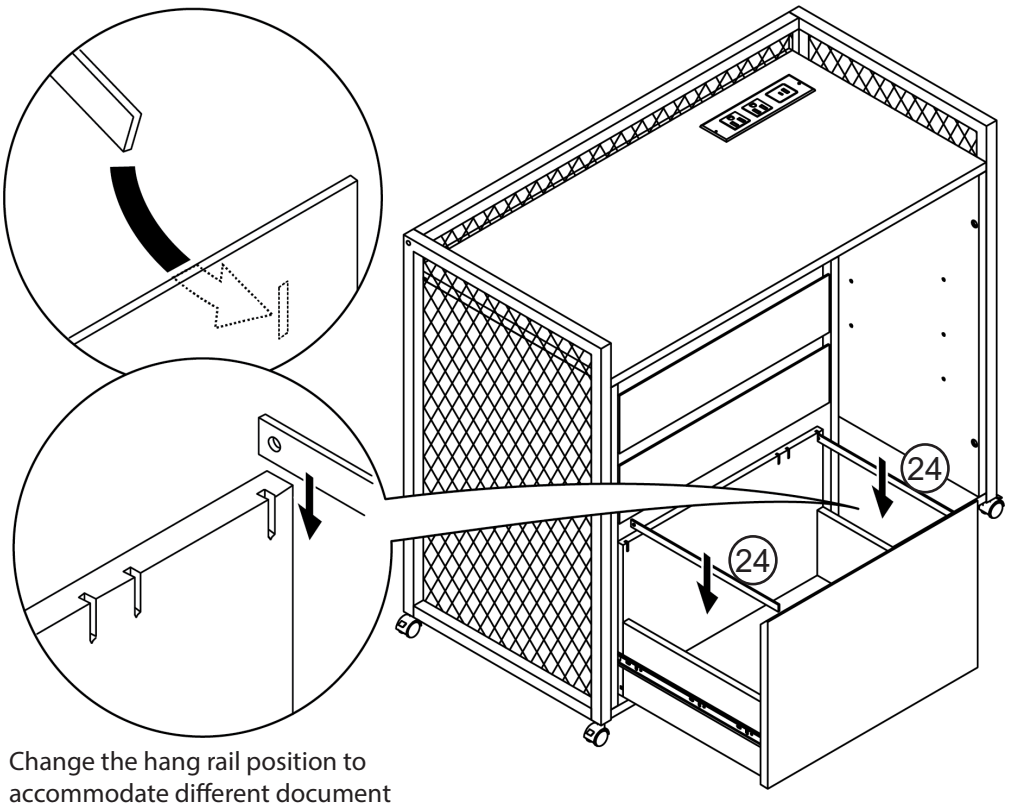

Change the hang rail position to accommodate different document file sizes.

22

Insert shelf pegs into the stand and put on the storage shelf panel (11).

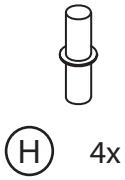

(H) 4x

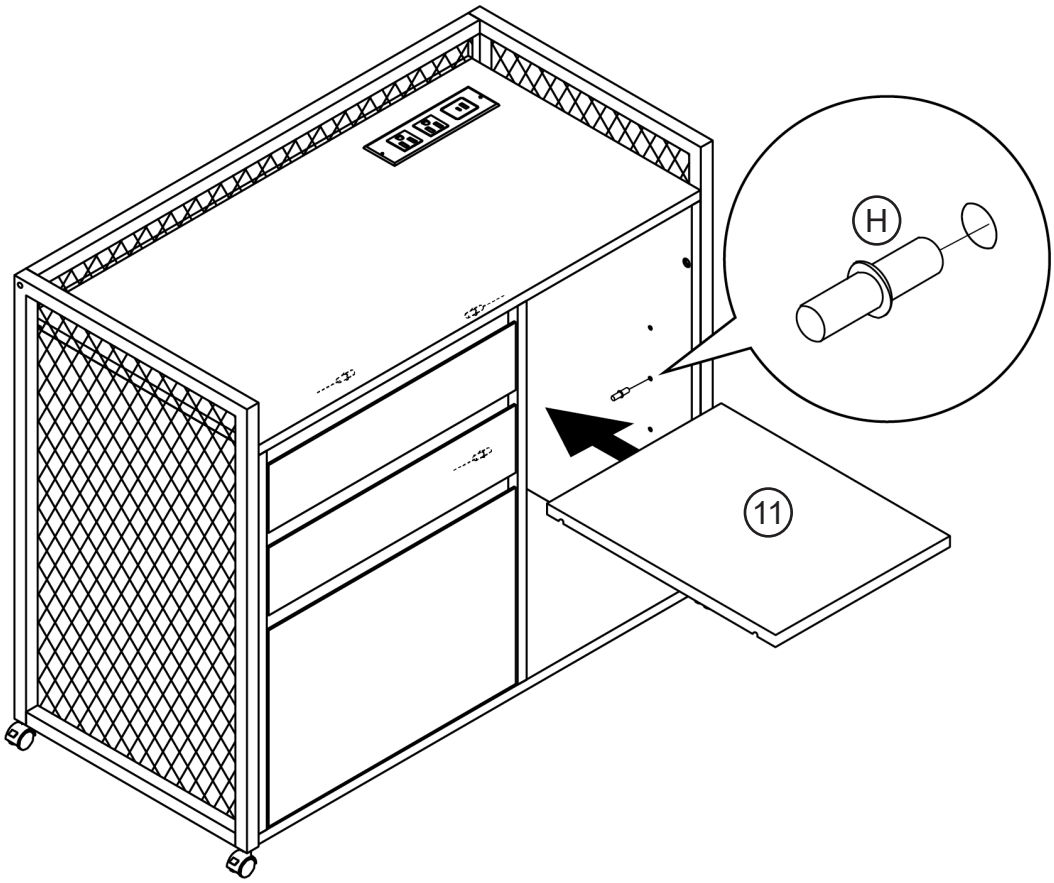

YOU’RE FINISHED!

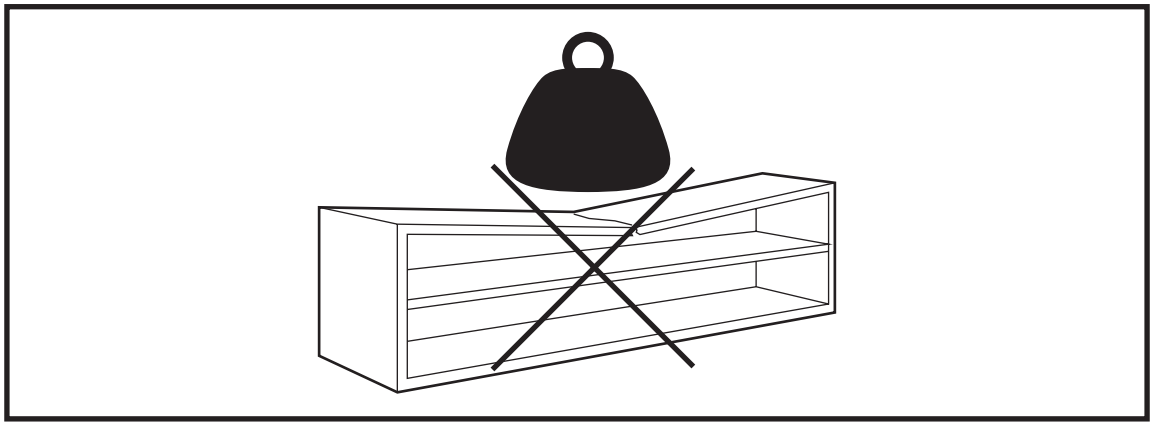

Warning

Only place items on top of the product if they meet the recommended size and weight limits.

Climbing on, stepping on, or placing overweighted objects on the product may cause property damage and/or injuries.

Items placed onto this product must be resting on a support surface without hanging over the edges.

FURNITURE CARE AND MAINTENANCE

Medium - Density Fiberboard

Thank you for your purchase. We want your item to last as long as possible.
To ensure the product gives you years of longevity, please follow the recommendations in this care and maintenance guide.

MAINTENANCE

- Tighten all bolts and screws again within the first 2 weeks of assembly.
- Check the tightness of all bolts every 2 months and tighten them if necessary.

CLEANING

- Clean the surface of the MDF (medium - density fiberboard) with a lightly dampened cloth.
- A small amount of mild soap can be used if necessary.
- Dry the surface immediately after cleaning.

⚠ DO NOT use bleach or alcohol to clean the surface.
⚠ DO NOT apply wood treatment on parts made with MDF.

MDF will swell and distort when exposed to water damage. Make sure to dry the furniture immediately after cleaning.

⚠ WARNING

The manufacturer and seller are not responsible for any and all liability relating to personal injury, property damage or losses, whether direct, indirect, or incidental, resulting from the incorrect attachment, improper use, inadequate maintenance, unapproved modification or neglect of this product.