DBGO#DRC
Bongo Dining Chair

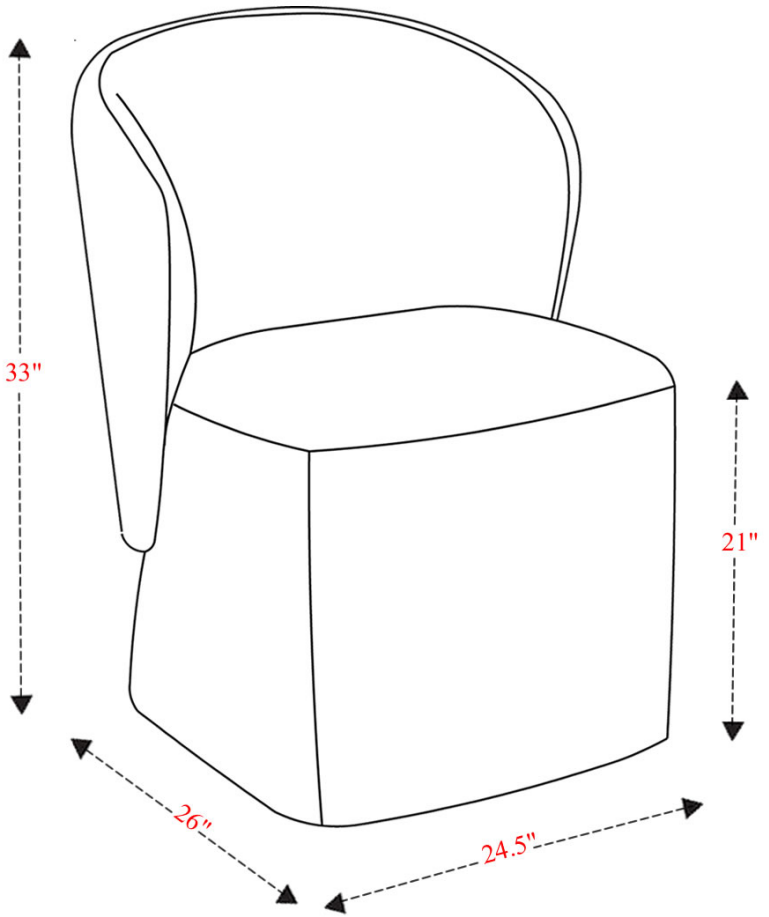

Overall Dimensions	24.5" x 26" x 33"
Overall Width	24.5"
Overall Depth	26"
Overall Height	33"
Overall Weight	27.9 lbs
Back Width	--
Back Depth	--
Back Height	15.5"
Seat Width	22"
Seat Depth	19"
Seat Height	21"

Carton Dimensions: 38"W x 25.5"D x 42"H